CONTRACT NO. 98542

F.A.S. RTE.	SECTION	COUNTY	TOTAL SHEETS	SHEET NO.
932	(8,9,11)W,RS-1	*	401	164
STA.		TO STA.		
FED. ROAD DIST. NO.		ILLINOIS	FED. AID PROJECT	

* JOHNSON/POPE

STATE OF ILLINOIS

DEPARTMENT OF TRANSPORTATION

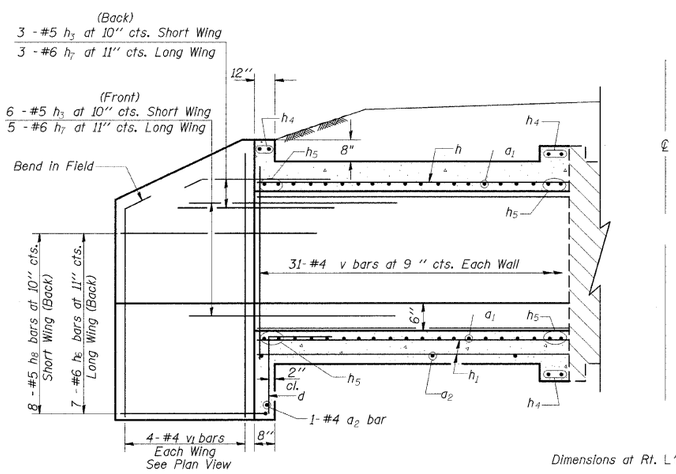

HALF LONG. SECTION

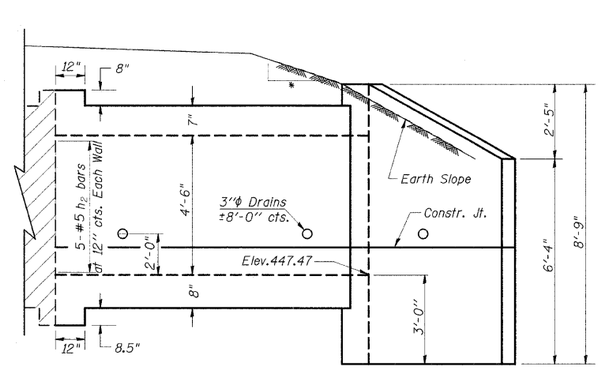

Dimensions at Rt. L's to ℄ Roadway

HALF ELEVATION

* 4:1 TO CLEAR ZONE
3:1 AFTER CLEAR ZONE

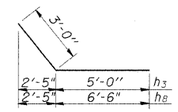

BARS h_3 & h_8

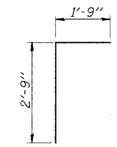

BAR d

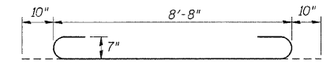

BAR a_1

DESIGN STRESSES

fy = 60,000 psi
f'c = 3,500 psi

LOADING HS 20-44 & ALT.

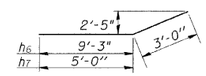

BARS h_6 & h_7

* a bars in skew portion of slab shall be ordered full length & cut to fit. Balance of bar to be used in opposite end of culvert.

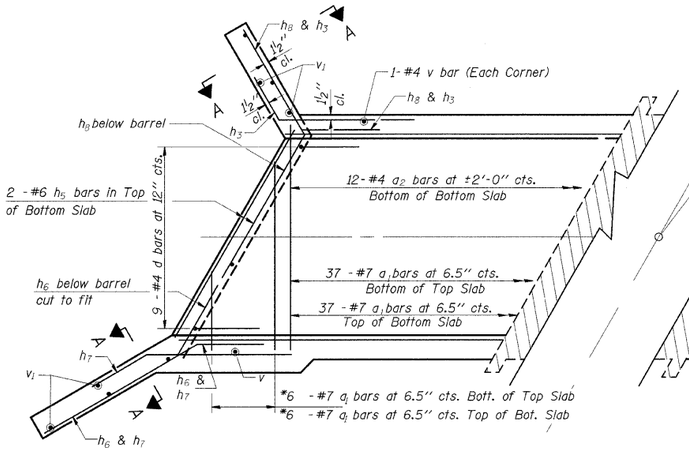

SHOWING REINFORCEMENT

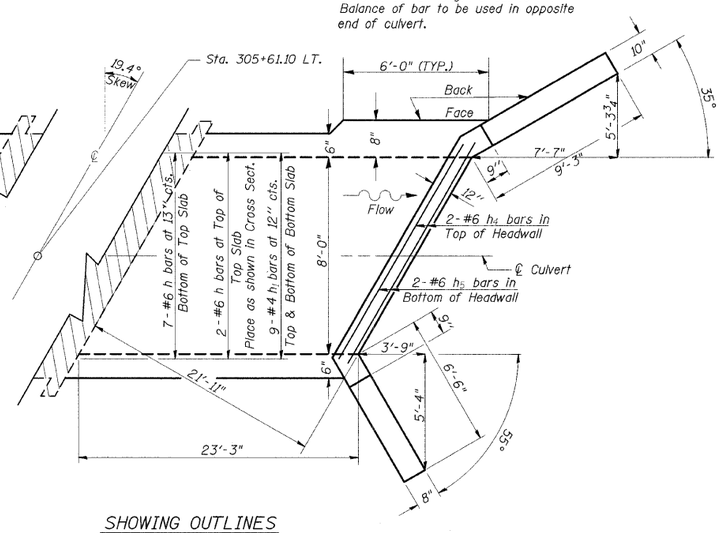

SHOWING OUTLINES

PLAN

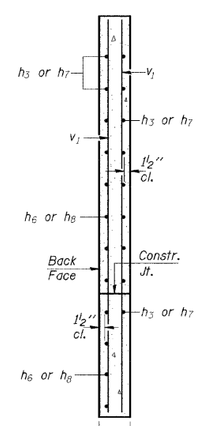

8'' SHORT WALL
10'' LONG WALL

SECTION A-A

Tilt hook of a_1 bars if necessary for 1½'' min. cl.

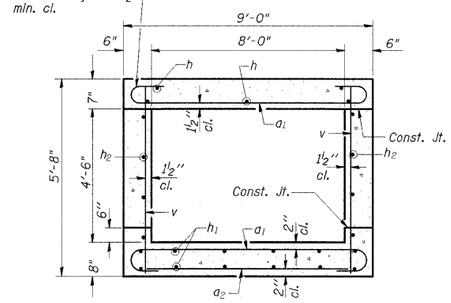

SECTION THRU BARREL

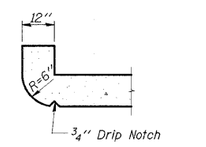

SECTION THRU HEADWALL
(Up Stream End Only)

BILL OF MATERIAL

Bar	No.	Size	Length	Shape
a_1	86	#7	10'-4''	
a_2	13	#4	8'-3''	
d	9	#4	4'-6''	
h	9	#6	23'-0''	
h_1	18	#4	23'-0''	
h_2	10	#5	23'-0''	
h_3	9	#5	8'-0''	
h_4	6	#6	8'-6''	
h_5	8	#6	8'-6''	
h_6	7	#6	12'-3''	
h_7	8	#6	8'-0''	
h_8	8	#5	9'-6''	
v	64	#4	6'-0''	
v_1	8	#4	7'-5''	
Expansion Bolts ¾''			Each	16
Concrete Box Culverts			Cu. Yd.	18.3
Reinforcement Bars			Pound	3600

PRECAST OPTION NOT ALLOWED

NOTES

A distance of half the length of the wingwall but not less than six feet of the barrel shall be poured monolithically with the wingwalls.

Reinforcement Bars shall conform to the requirements of AASHTO M-31, M-42 or M-53, Grade 60.

Bars indicated thus 12 x 4-#5 etc. indicates 12 lines of bars with 4 lengths per line.

All construction joints shall be bonded.

ILLINOIS DEPARTMENT OF TRANSPORTATION

BOX CULVERT EXTENSION

STATION 305+61.10 LT.

8' X 4.5', SKEW 19.4° RT. AH.

EXTEND 23'-3''

SSB-H-R 6-1-2000

DATE-TIME
DGN-SPEC