TRUSS UNIT TABLE

Structure Number	Location	Station	Design Truss Type	Exterior Units (2)			Interior Unit				Upper & Lower Chord		Verticals; Horizontals; Vertical, Horizontal, and Interior Diagonals		Camber at Midspan	Splicing Flange					
																Bolts		Weld Sizes		A	B
				No. Panels per Unit	Unit Lgth.(L_e)	Panel Lgth.(P)	No. Req'd.	No. Panels per Unit	Unit Lgth.(L_I)	Panel Lgth.(P)	O.D.	Wall	O.D.	Wall		No./Splice	Dia.	W	W_1		
IS049U012R000.0-000	2	247+00	I-A	8	37'-2½"	4'-5"	0	NA	NA	NA	5"	5/16"	2½"	5/16"	1⅞"	6	⅞"	5/16"	¼"	8¾"	11¾"
IS016I090L082.6-000	12	3535+00	I-A	7	34'-3"	4'-7½"	0	NA	NA	NA	5"	¼"	2½"	¼"	1⅝"	6	⅞"	5/16"	¼"	8¾"	11¾"

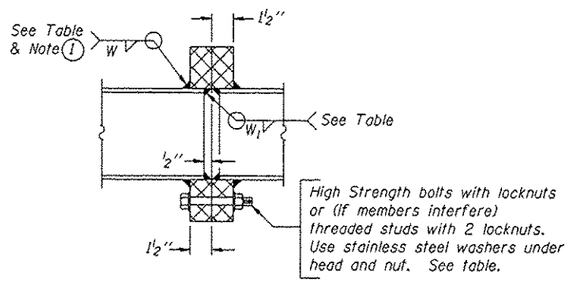

SECTION B-B

(1) Splicing Flanges shall be attached to each truss unit with the truss shop assembled to camber shown. Truss units shall be in proper alignment and flange surfaces shall be shop bolted into full contact before welding. Sufficient external welds or tacks shall be made to secure flanges until remaining welds are made after disassembly. Adjacent flanges shall be "match marked" to insure proper field assembly.

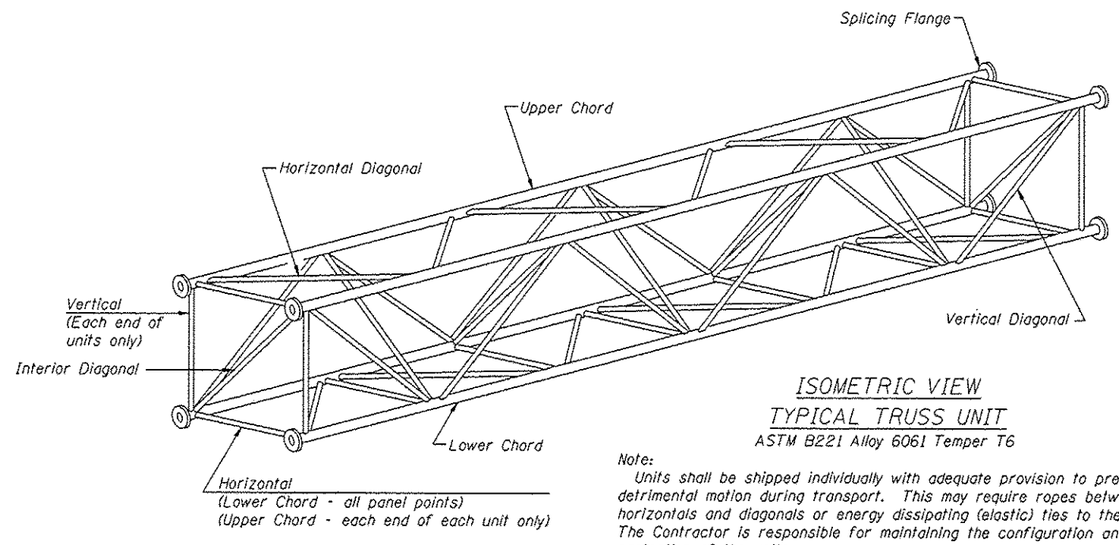

ISOMETRIC VIEW
TYPICAL TRUSS UNIT
ASTM B221 Alloy 6061 Temper T6

Note:
Units shall be shipped individually with adequate provision to prevent detrimental motion during transport. This may require ropes between horizontals and diagonals or energy dissipating (elastic) ties to the vehicle. The Contractor is responsible for maintaining the configuration and protection of the units.

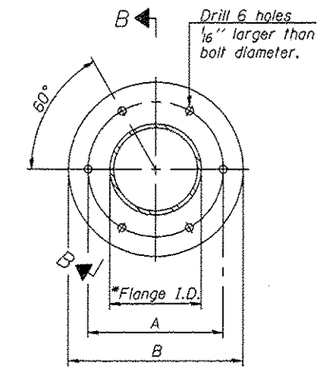

TRUSS TYPES I-A, II-A, & III-A

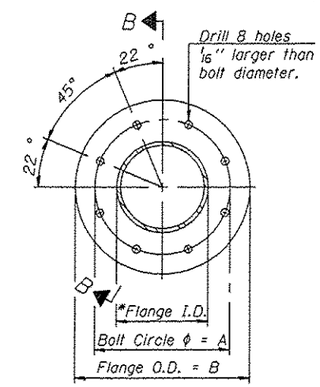

TRUSS TYPES II-A & III-A

SPLICING FLANGES
ASTM B221, Alloy 6061-T6
or ASTM B209, Alloy 6061-T651
*To fit O.D. of Chord with maximum gap of 1/16".

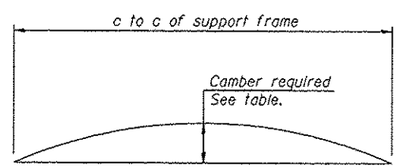

CAMBER DIAGRAM
Camber curve shown is theoretical. Actual camber attained by slope changes at splices between units.

CAMBER ATTAINMENT EXAMPLES:

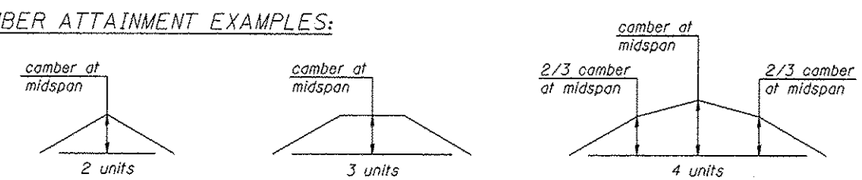

Camber shown is for fabrication only, measured with truss fully supported. (No-load condition)

H:\Jobs20\20130012-44\CAD\Site\dgn\00\D46291-s03span-trussdet2.dgn
8/1/2013 3:56:55 PM

GRAEF 8501 W. Higgins Road Suite 280 Chicago, Illinois 60631 (773) 399-0112

USER NAME =	DESIGNED -	REVISED
	CHECKED -	REVISED
PLOT SCALE =	DRAWN - 08/01/2013	REVISED
PLOT DATE =	CHECKED -	REVISED

STATE OF ILLINOIS
DEPARTMENT OF TRANSPORTATION

ALUMINUM SPAN SIGN TRUSS; STEEL SUPPORTS
SPAN TRUSS DETAILS 2
SHEET NO. 53 OF 28 SHEETS

F.A. RTE.	SECTION	COUNTY	TOTAL SHEETS	SHEET NO.
VAR.	01 OVD SIN STR REPL14-30	VARIOUS	47	12
		CONTRACT NO. 46291		
		ILLINOIS FED. AID PROJECT		