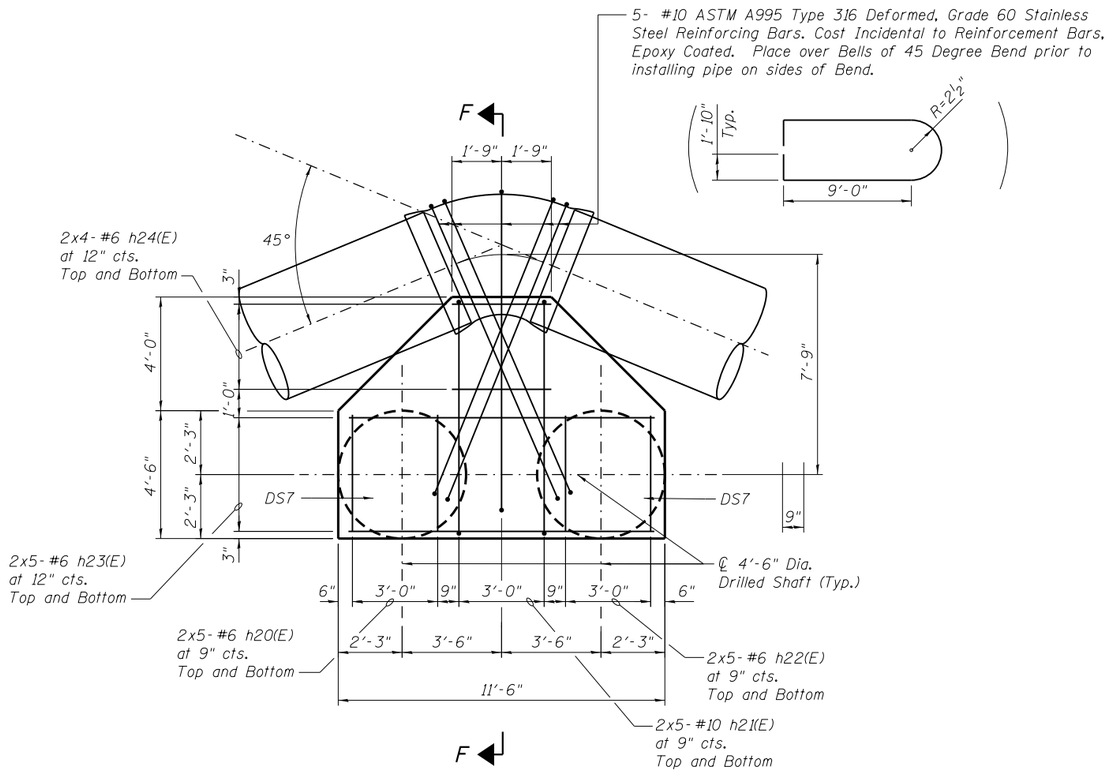

PLAN DETAIL
THRUST RESTRAINT - TYPE 7

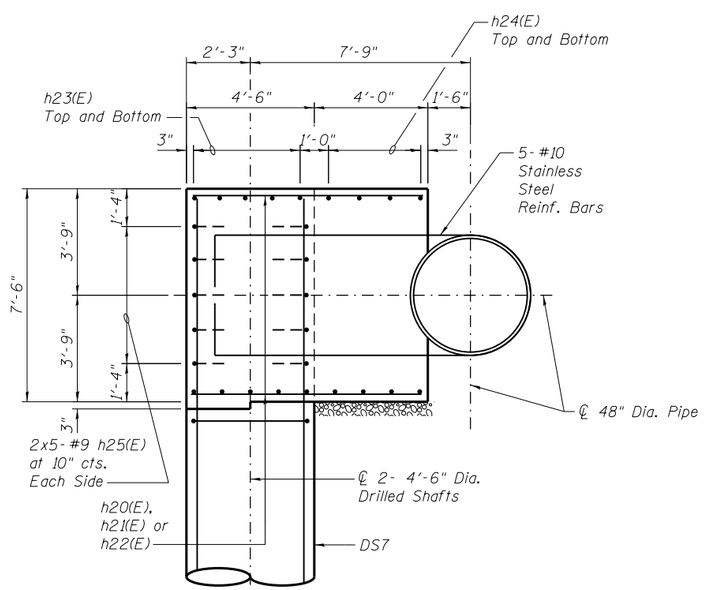

SECTION F-F

NOTES:
1. Work this Sheet with Sheets 148 and 149

AECOM	USER NAME = cleerd	DESIGNED - AAG	REVISED	STATE OF ILLINOIS DEPARTMENT OF TRANSPORTATION	WATER MAIN THRUST RESTRAINTS PLAN DETAILS AND SECTIONS	F.A.I. RTE.	SECTION	COUNTY	TOTAL SHEETS / SHEET NO.
		CHECKED - DHR	REVISED			90/94/290	2013-008R	COOK	559 / 148A
	PLOT SCALE = N.T.S.	DRAWN - DLC	REVISED					CONTRACT NO. 60W26	
	PLOT DATE = 9/15/2013	CHECKED - AAG	REVISED		SHEET NO. 3 OF 4 SHEETS		ILLINOIS	FED. AID PROJECT	

D160W26-sht-WM-09A.dgn