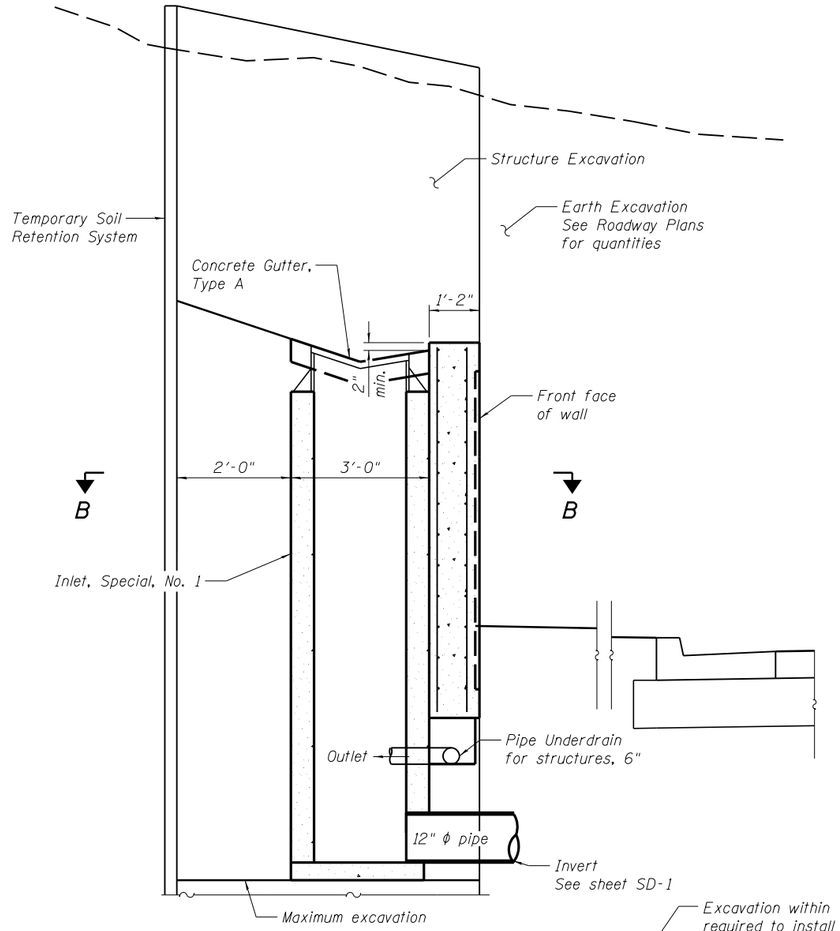

INLET, SPECIAL, NO. 1

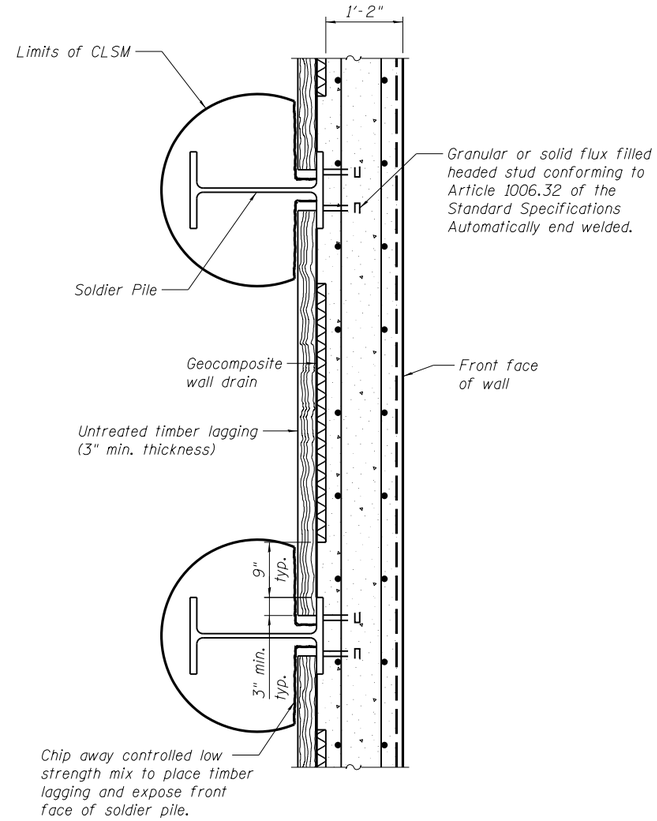

SECTION THRU DRILLED SOLDIER PILE WALL

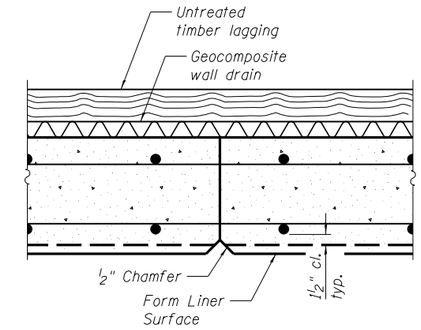

CONSTRUCTION JOINT

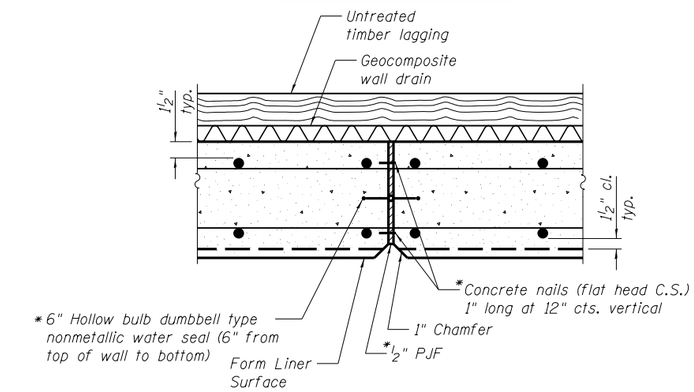

EXPANSION JOINT

* Cost included with Concrete Structures.

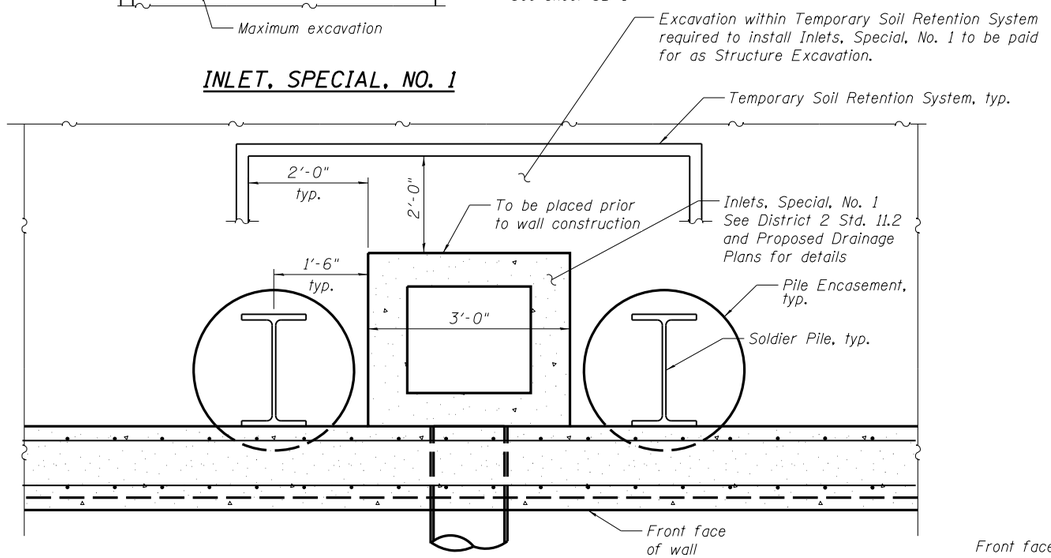

SECTION B-B

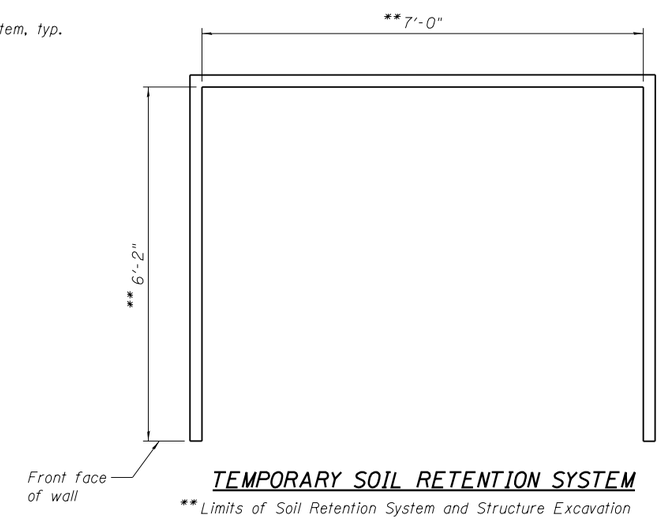

TEMPORARY SOIL RETENTION SYSTEM

** Limits of Soil Retention System and Structure Excavation

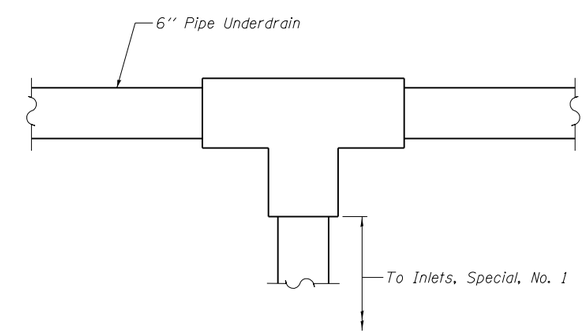

PIPE UNDERDRAIN OUTLET

See Sheet SD-1 for locations of Inlets Special

LIN ENGINEERING, LTD. Consulting Engineers Springfield, Illinois	USER NAME =	DESIGNED - TBP	REVISED ADDENDUM 1 8/15/2013	STATE OF ILLINOIS DEPARTMENT OF TRANSPORTATION	DRAINAGE DETAILS RETAINING WALL – STA. 18+89.06 TO STA. 27+37.02	F.A.P. RTE.	SECTION	COUNTY	TOTAL SHEETS	SHEET NO.
	FILE NAME =	CHECKED - VPT	REVISED			595	(142-1)R & 142-1HB	ROCK ISLAND	507	363H
	PLOT SCALE =	DRAWN - AJF	REVISED					CONTRACT NO. 64B84		
	PLOT DATE =	CHECKED - MTH	REVISED		SD-4 OF SD-18		ILLINOIS	FED. AID PROJECT		