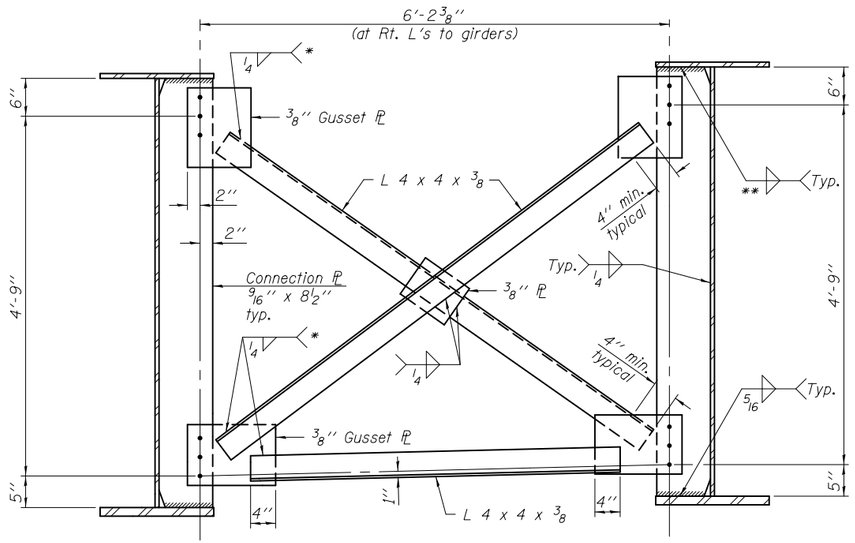

CROSS FRAME CF

(470 Required)

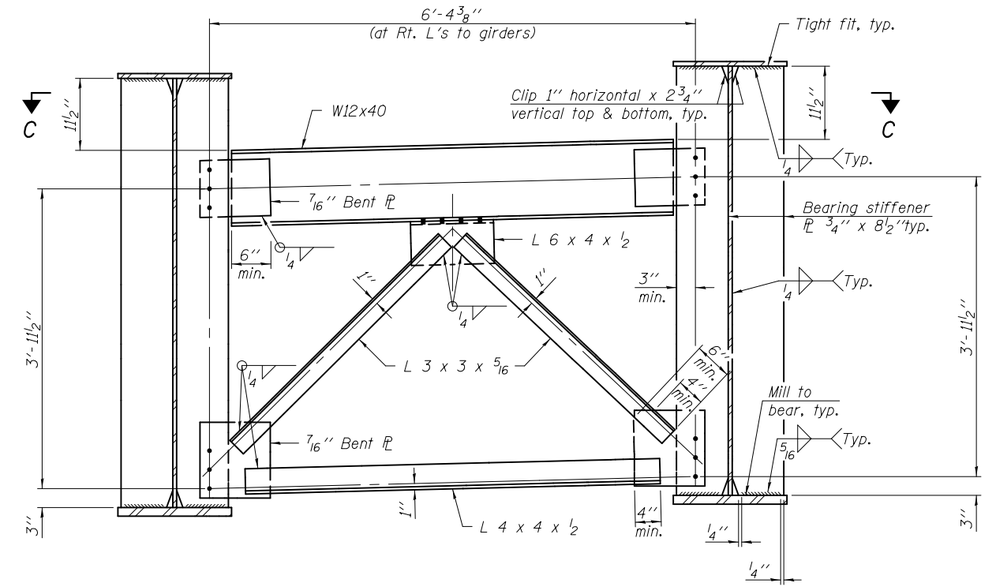

CROSS FRAME CF1

(20 Required)

* Fillet weld angles along 3 sides on one face of gusset plate.

** 1/4" weld for 3/4" top flange thickness (250 locations)
5/16" weld for all other top flange thicknesses (220 locations)

Notes:
Detail 15/16" ϕ holes for all 3/4" bolts. Two hardened washers required for each set of oversized holes.
All cross frames, bearing stiffeners, gusset plates, and connecting plates shall be AASHTO M270, Gr. 50W.

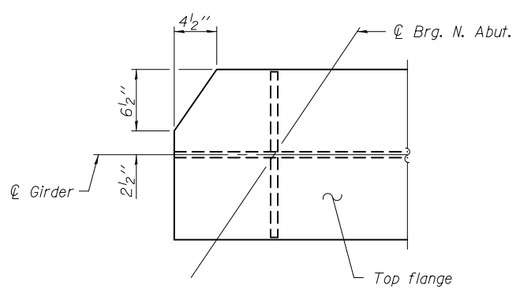

CLIPPING DETAIL

(Top flange of girders at N. Abut.)

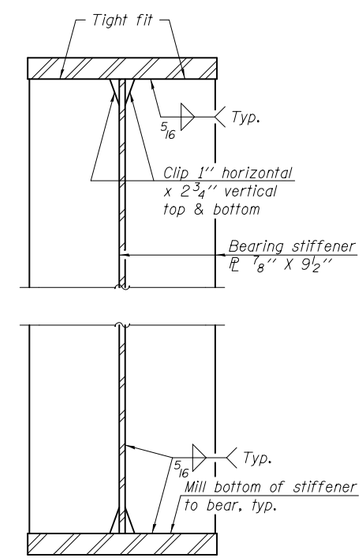

BEARING STIFFENER AT PIERS

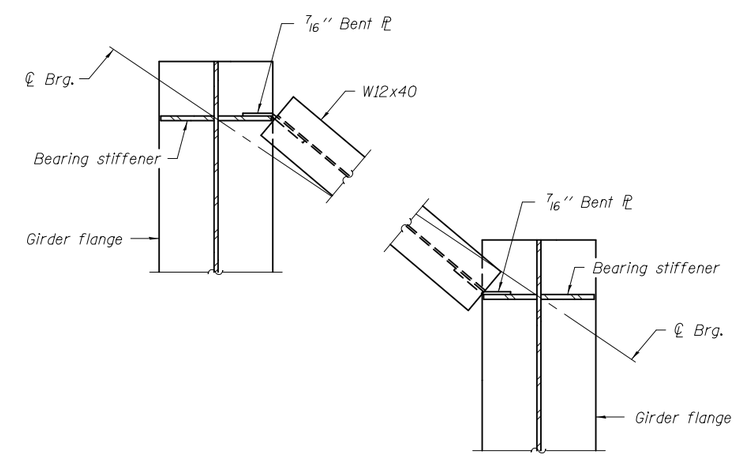

SECTION C-C

DESIGNED - DAVID H. RICHTER	EXAMINED	ACTING ENGINEER OF BRIDGE DESIGN	DATE - OCTOBER 4, 2013	STATE OF ILLINOIS DEPARTMENT OF TRANSPORTATION	STRUCTURAL STEEL DETAILS STRUCTURE NO. 046 – 0135 (NB) & 046 – 0136 (SB)
CHECKED - JUSTIN T. BELUE					
DRAWN - MICHAEL B. MOSSMAN	PASSED	ACTING ENGINEER OF BRIDGES AND STRUCTURES	REVISED ___		SHEET NO. 35 OF 79 SHEETS
CHECKED - J.T.B. / D.H.R.			REVISED ___		

F.A.I. RTE.	SECTION	COUNTY	TOTAL SHEETS	SHEET NO.
57	(140)BR&BR-1	KANKAKEE	183	75
		CONTRACT NO. 66750		
	ILLINOIS	FED. AID PROJECT		