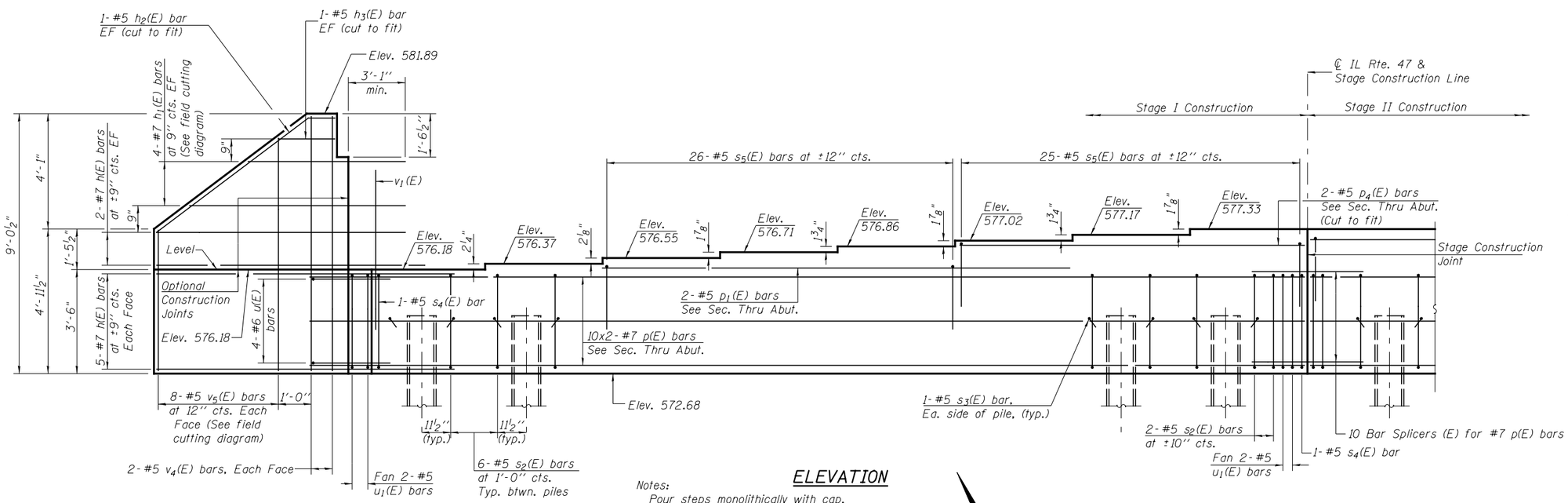

ELEVATION

Notes:
Pour steps monolithically with cap.
See sheet 22 of 30 for Bar Details
See sheet 23 or 30 for Pile Details.
See sheet 24 of 30 for Bar Splicer Details.

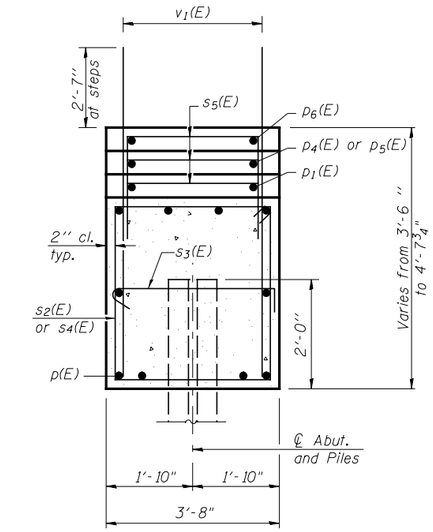

SEC. THRU ABUT.

Dimensions at right angles to abutment.

NORTH ABUTMENT BILL OF MATERIAL

Bar	No.	Size	Length	Shape
h(E)	28	#7	13'-9"	
h_1(E)	8	#7	18'-5"	
h_2(E)	4	#5	10'-5"	
h_3(E)	4	#5	2'-9"	
p(E)	40	#7	36'-9"	
p_1(E)	4	#5	33'-10"	
p_4(E)	2	#5	25'-3"	
p_5(E)	2	#5	36'-4"	
p_6(E)	2	#5	10'-8"	
s_2(E)	112	#5	13'-9"	
s_3(E)	40	#5	4'-4"	
s_4(E)	4	#5	15'-1"	
s_5(E)	111	#5	8'-8"	
u(E)	8	#6	14'-3"	
u_1(E)	8	#5	9'-2"	
v_1(E)	274	#8	5'-11"	
v_2(E)	4	#5	8'-10"	
v_3(E)	8	#5	13'-4"	
v_4(E)	4	#5	8'-8"	
v_5(E)	8	#5	12'-10"	
Structure Excavation			Cu. Yd.	485
Concrete Structures			Cu. Yd.	82.2
Reinforcement Bars, Epoxy Coated			Pound	12,170
Furnishing Steel Piles, HP12x63			Foot	900
Driving Piles			Foot	900
Pile Shoes			Each	20

MIN. BAR LAP

#7 = 5'-10"

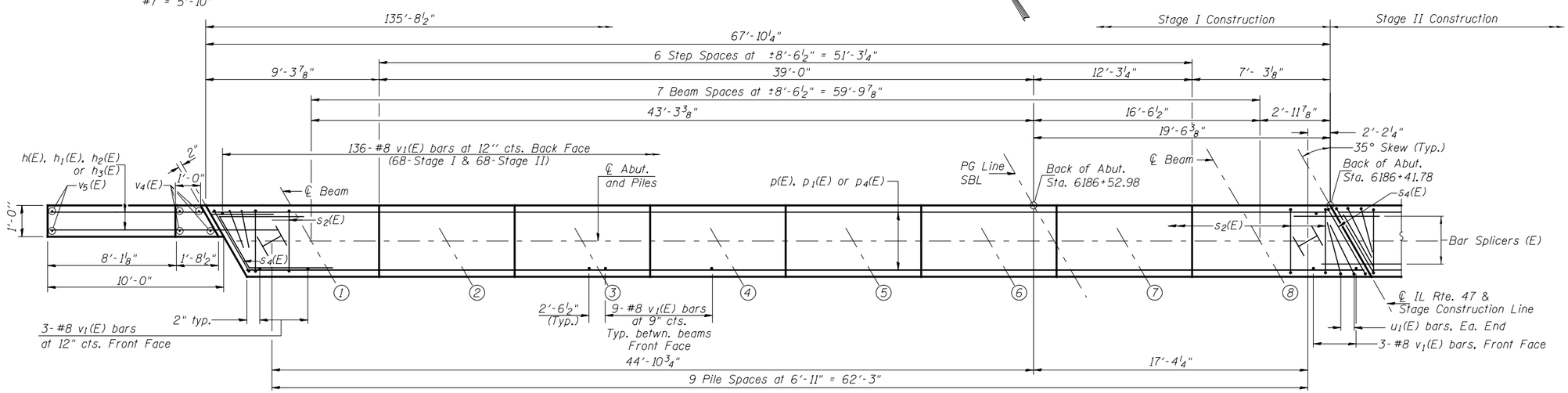

PLAN

PILE DATA

Type: Steel HP12x63 with Pile Shoes
Nominal Required Bearing: 497 kips
Factored Resistance Available: 273 kips
Est. Length: 45'
No. Production Piles: 20
No. Test Piles: 0

Piles shall be driven through 2'-0" diameter precored holes extending to elevation 567.5 according to Article 512.09(c) of the Standard Specifications. Cost included with driving piles.

Portions of a previous existing structure may need to be removed to allow driving of new piles. Precoring through the existing embankment and abutment according to Article 512.09(c) of the Standard Specifications may be an allowed option. Cost included with the Removal of Existing Structures.