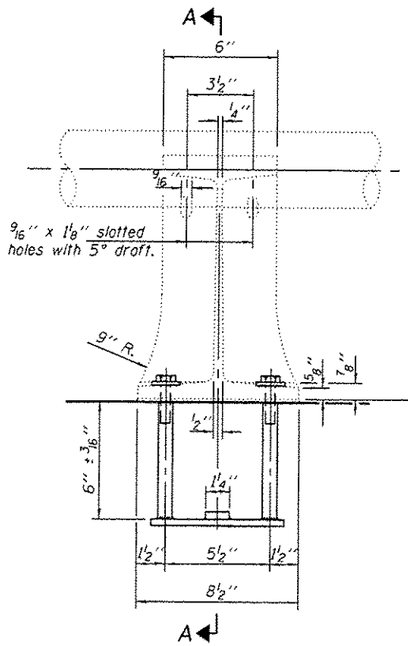

ELEVATION

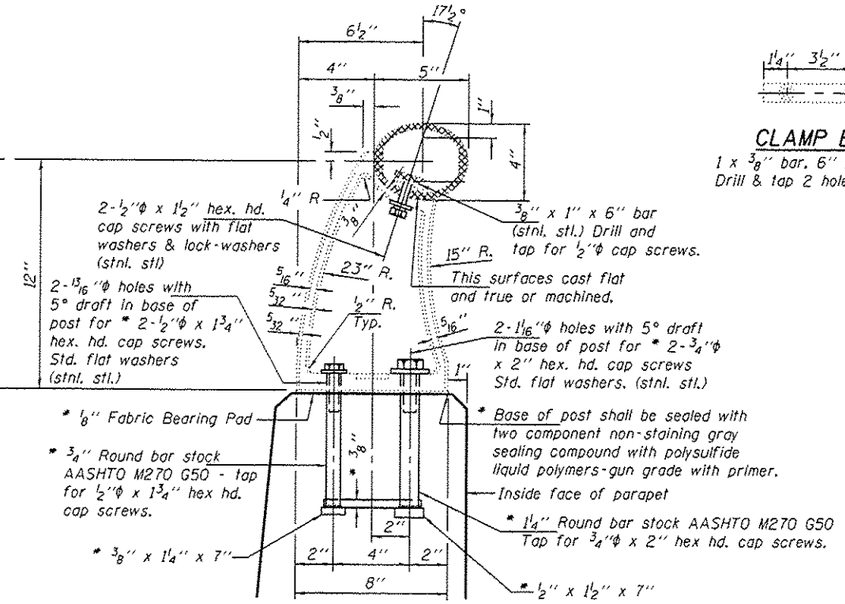

SECTION A-A

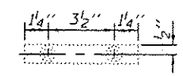

CLAMP BAR

1 x ⅜" bar, 6" long (Stnl. stl)
Drill & tap 2 holes ½"-13

RAIL POST DETAILS

* New Rail Post anchorage devices at each location where posts are connected to new construction. Cost included with Remove and Re-erect Existing Handrail.

In lieu of the cast-in-place anchor device shown, the Contractor has the option of drilling and setting stainless steel anchor rods of the same diameter and grade as the specified cap screws according to Article 509.06 of the Standard Specifications. Embedment shall be according to the manufacturer's specifications.

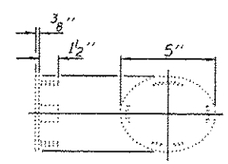

CAST END CAP

DRIVE FIT TYPE

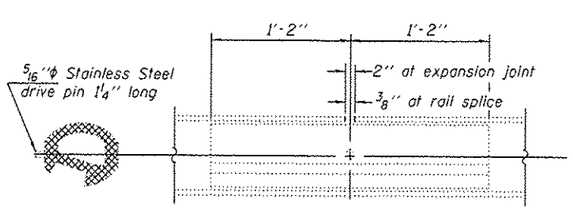

RAIL SPLICE

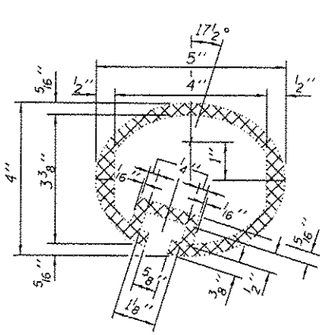

SEC. THRU ELLIPTICAL RAIL SECTION

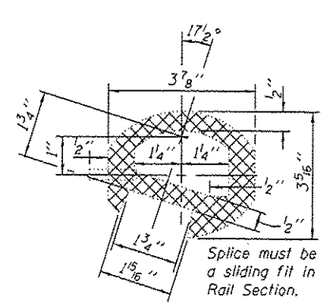

SEC. THRU SPLICE

Notes:
All Posts shall be normal to parapet.
All joints in rail shall be spliced per detail.
All exposed rail ends shall be capped per detail.
Provide 1-⅛" and 2-1/16" Aluminum Shims for 25% of the Posts. Rail elements shall be parallel to Grade-high spots will be ground and low spots shimmed.

BILL OF MATERIAL

Item	Unit	Quantity
Remove and Re-erect Existing Handrail	Foot	46

DESIGNED TLC	EXAMINED	DATE AUGUST 30, 2013	STATE OF ILLINOIS DEPARTMENT OF TRANSPORTATION
CHECKED SMR	PASSED	REVISED	
DRAWN baliva	ACTING ENGINEER OF STRUCTURAL SERVICES	REVISED	
CHECKED TLC SMR	ACTING ENGINEER OF BRIDGES AND STRUCTURES		

REPAIR DETAILS
SN 053-0129
SHEET NO. 5 OF 7 SHEETS

F.A.I. RTE.	SECTION	COUNTY	TOTAL SHEETS	SHEET NO.
55	153-5B-1)(-3	LIVINGSTON	15	13

CONTRACT NO. 66D16
ILLINOIS FED. AID PROJECT