F.A.P. RTE.	SECTION	COUNTY	TOTAL SHEETS	SHEET NO.
668	28R-1	SANGAMON	354	49
STA.		TO STA.		
FED. ROAD DIST. NO.	ILLINOIS	FED. AID PROJECT		

CONTRACT NO. 72501

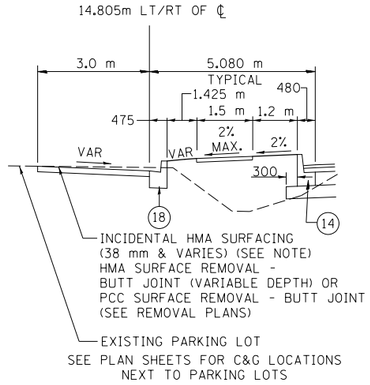

DETAIL B

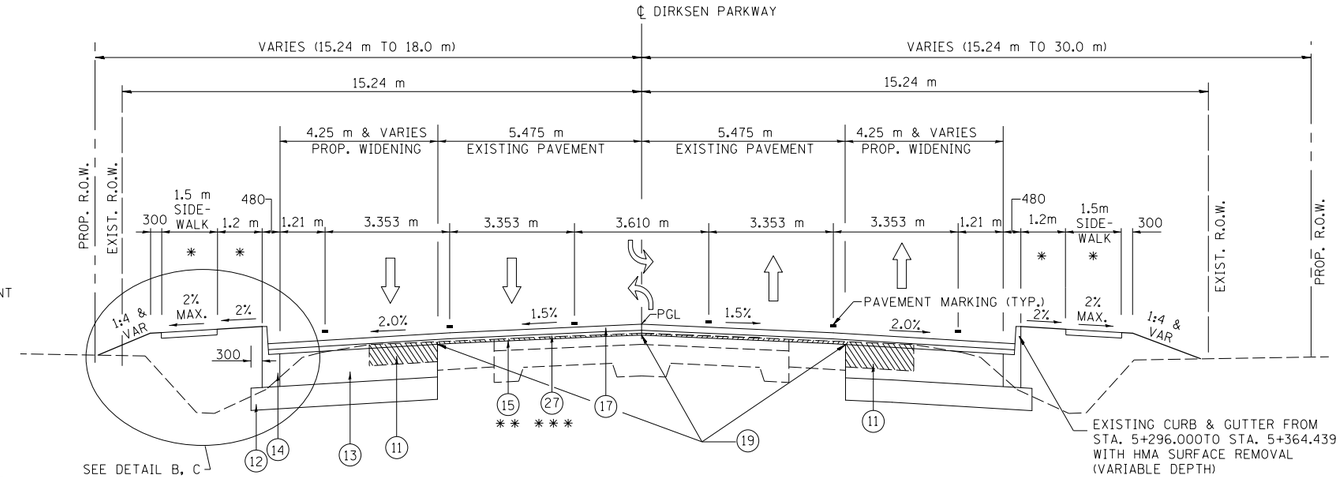

TYPICAL PROPOSED SECTION (WIDENING)
DIRKSEN PARKWAY
STA. 5+296.000 TO 6+568.467

STATION EQUATION:
STATION 6+030.021 BK = STATION 6+027.285 AH

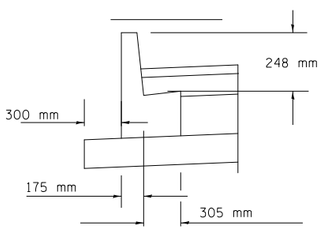

DETAIL C

PROPOSED COMBINATION CONCRETE CURB
& GUTTER, TYPE B-22.30 (SPECIAL)

LEGEND

1. EXIST P.C.C. PAVEMENT
2. EXIST BIT CONCRETE SURFACE COURSE, 75 mm
3. EXIST BIT CONCRETE SURFACE COURSE, 38 mm
4. EXIST LEVELING BINDER, 25 mm
5. EXIST BIT BASE COURSE WIDENING 225 mm
6. EXIST BIT BASE COURSE WIDENING 220 mm
7. EXIST BIT SHOULDER 150 mm
8. EXIST BIT SHOULDER 220 mm
9. EXIST SUBBASE GRANULAR MATERIAL, 100 mm
10. EXIST COMBINATION CURB & GUTTER TY B-15.60
11. PROP PAVED SHOULDER REMOVAL
12. PROP SUB-BASE GRANULAR MAT TY A 200 mm
13. PROP BASE COURSE WIDENING, 280 mm
14. PROP COMBINATION CURB & GUTTER TY B-22.30 (SPECIAL)
15. HMA SURFACE REMOVAL, VAR. DEPTH (AVG DEPTH 19 mm)
16. PROP POLYMERIZED LEVELING BINDER (MACHINE METHOD), N70 (VARIABLE DEPTH, MIN DEPTH 19 mm)
17. PROP POLYMERIZED HMA SURFACE COURSE, MIX "D", N70 (38 mm)
18. PROP COMBINATION CURB & GUTTER TY B-15.30
19. STRIP REFLECTIVE CRACK CONTROL TREATMENT
20. PROP COMBINATION CURB & GUTTER TY B-22.60
21. PROP COMBINATION CURB & GUTTER TY B-15.60
22. AGGREGATE BASE COURSE, TYPE A, 200 mm
23. AGGREGATE SHOULDERS, TYPE B 100 mm
24. PROP LEVELING BINDER (MACHINE METHOD), N50 (25 mm)
25. PROP HMA SURFACE COURSE, MIX "C", N50 (38 mm)
26. PROP HMA BINDER COURSE, IL 19.0, N50 (57 mm)
27. POLYMERIZED HMA BINDER COURSE, IL 19.0, N70 (MIN DEPTH 57 mm)

* SEE CROSS SECTIONS FOR VARIATION IN SLOPES

** 57 mm TO BE REMOVED FROM STA. 5+225.236 TO STA. 5+375.000 AND FROM 6+568.467 TO 6+840.00. FROM STA. 5+375.00 TO STA. 5+400.00 THE REMOVAL DEPTH WILL TRANSITION FROM FROM 57 mm TO 19 mm. FROM STA. 6+550.000 TO 6+568.467 THE REMOVAL DEPTH WILL TRANSITION FROM 19 mm TO 57 mm.

*** FROM STA. 5+296.000 TO STA. 5+412.500 AND STA. 6+550.000 TO 6+568.467 PROP POLYMERIZED LEVELING BINDER (MACHINE METHOD), N70 (MIN DEPTH 19 mm) SHALL BE UTILIZED. FROM STA. 5+375.00 TO STA. 5+412.500 AND STA. 6+550.000 TO STA. 6+568.467 THE DEPTH OF LEVELING BINDER WILL VARY TO BUILD THE TRANSITION TO AND FROM THE PROPOSED PROFILE RAISE. FROM STA. 5+412.500 TO STA. 6+550.00 POLYMERIZED HMA BINDER COURSE, IL 19.0, N70 (MIN DEPTH 57 mm) SHALL BE UTILIZED AS SHOWN.

LIMITS FOR WIDENING
5+290.963 LT TO 6+561.757 LT
5+371.955 RT TO 6+561.757 RT

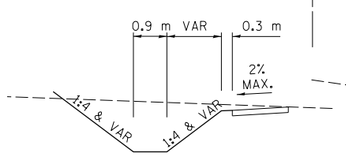

DETAIL D

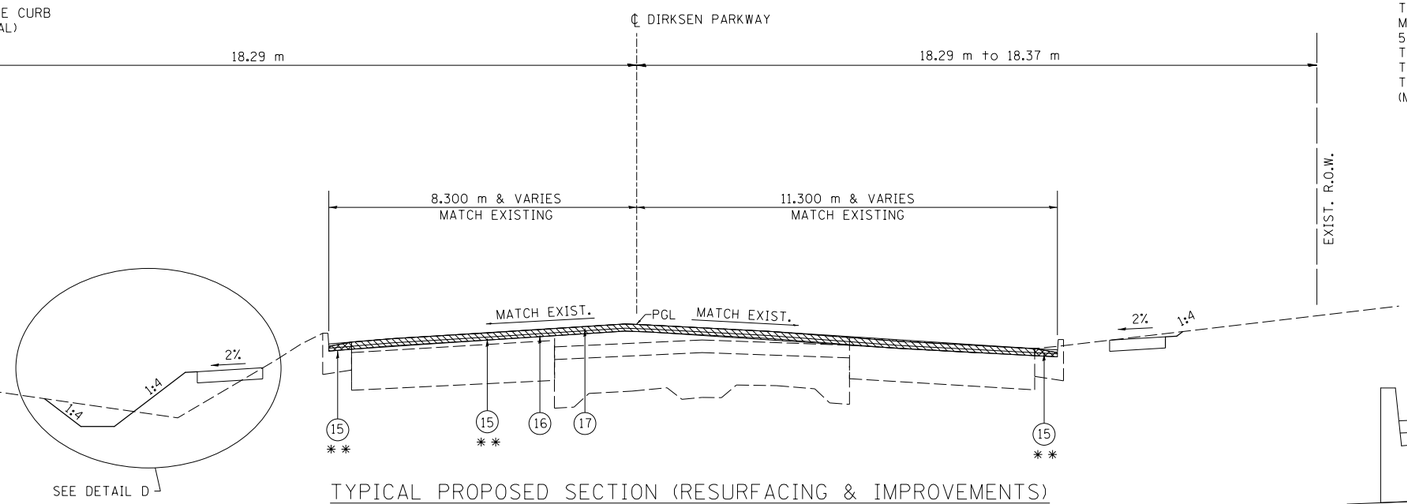

TYPICAL PROPOSED SECTION (RESURFACING & IMPROVEMENTS)
DIRKSEN PARKWAY
STA. 6+568.467 TO 6+840.000

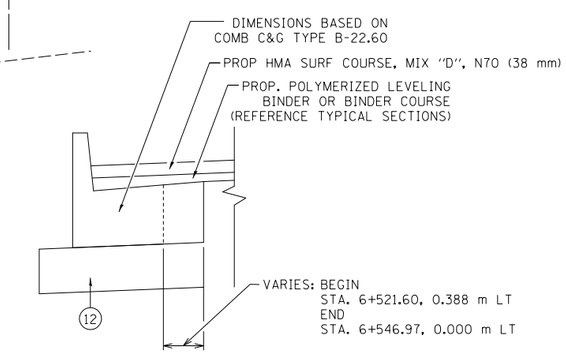

COMB. CONC. C&G, TYPE B (SPECIAL)

NOTE:

THE PROPOSED ROADWAY CROWN SHALL TAPER AWAY FROM THE PROPOSED CENTERLINE AND PROFILE GRADE LINE AT THE FOLLOWING LIMITS:

- FROM STA. 6+438.700, 0.0 m TO STA. 6+532.906, 1.485 m RT
- FROM STA. 6+532.906, 1.485 m RT TO STA. 6+562.500, 1.485 m RT
- FROM STA. 6+562.500, 1.485 m RT TO STA. 6+568.467, OFFSET TO MATCH EXISTING ROADWAY CROWN

THE FOLLOWING ROADWAY CROWN ELEVATIONS WITHIN THE TAPER LIMITS ARE PROVIDED:

STATION	ELEVATION
6+438.700	180.984
6+450.000	180.923
6+462.500	180.853
6+475.000	180.781
6+487.500	180.695
6+500.000	180.607

STATION	ELEVATION
6+512.500	180.519
6+525.500	180.430
6+537.500	180.312
6+550.000	180.192
6+562.500	180.072

NOTE: IF TWO LIFTS OF LEVELING BINDER ARE REQUIRED, THE TOP LIFT SHALL HAVE A MINIMUM THICKNESS OF 38 mm. (57 mm MAX)

AT THE PARKING LOT RESURFACING LOCATIONS (DETAIL B), AGGREGATE BASE COURSE, 150 mm SHALL BE PROVIDED AT SECTIONS WHERE THE EXISTING PAVEMENT SURFACE IS COMPLETELY REMOVED (DEEP CUT SECTIONS) AS NECESSARY. SEE THE CROSS SECTION SHEETS FOR MORE DETAIL.

REVISIONS	
NAME	DATE

ILLINOIS DEPARTMENT OF TRANSPORTATION

TYPICAL SECTIONS

F.A.P. ROUTE 668 (DIRKSEN PARKWAY)
SECTION 28R-1
SANGAMON COUNTY

SCALE: NONE
DATE: 06/2013

DRAWN BY: RK
CHECKED BY: SEW