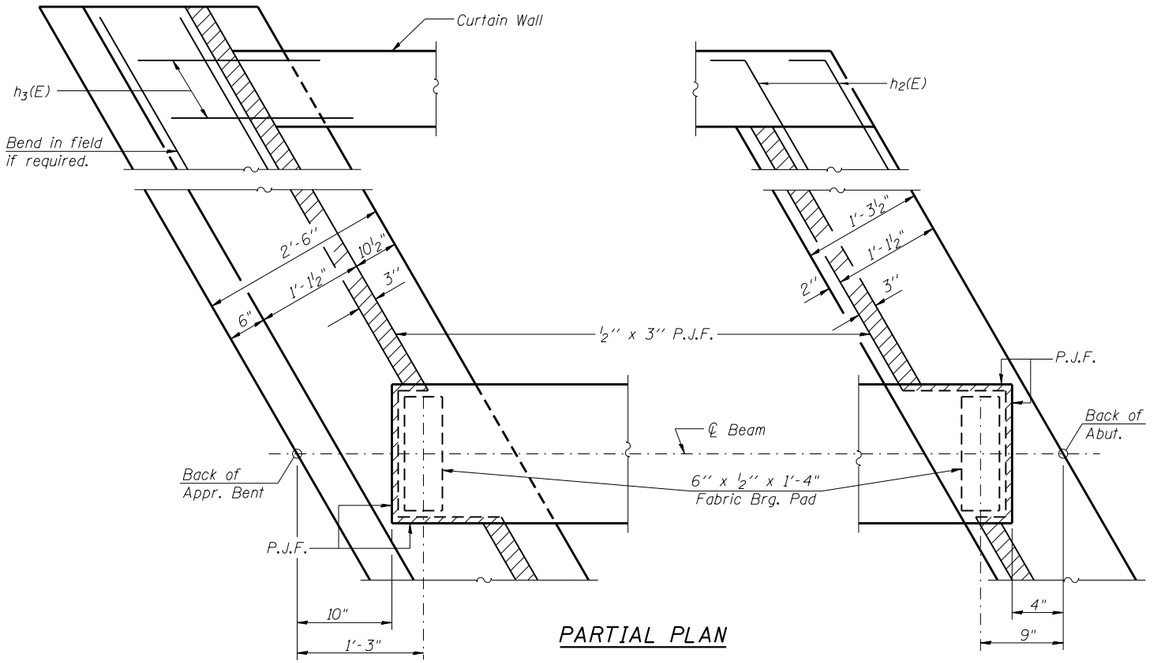

PARTIAL PLAN

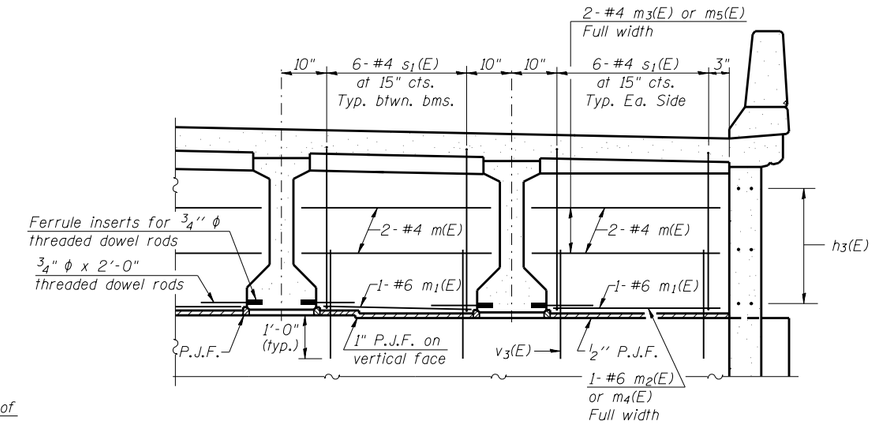

DIAPHRAGM AT APPROACH BENT

For location of m(E), $m_1(E)$, $m_2(E)$, $m_3(E)$, $m_4(E)$ and $m_5(E)$ bars see Section B-B on sheet 10 of 27.

(See "Diaphragm at Abutment" for Staging Details.)

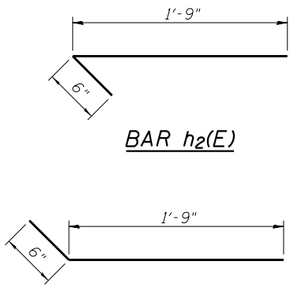

BAR $h_2(E)$

BAR $h_1(E)$

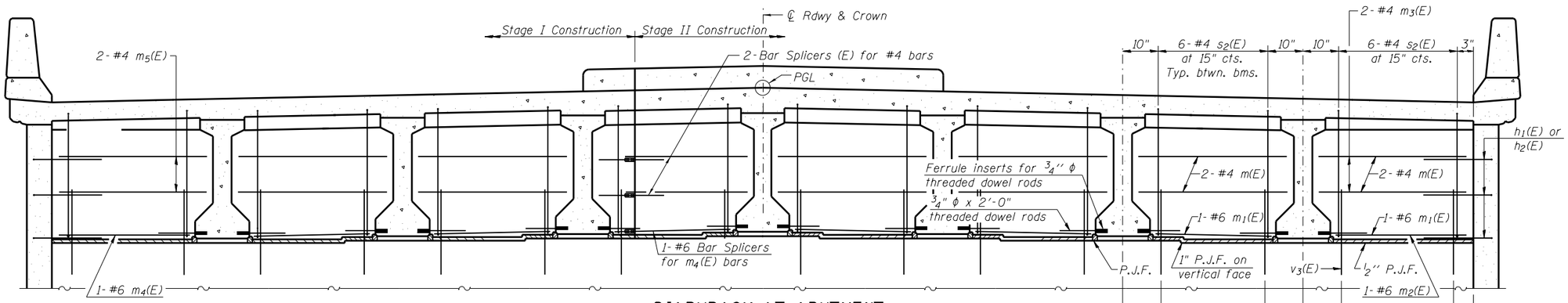

DIAPHRAGM AT ABUTMENT

(Looking South at S. Abut., N. Abut. Similar)

For location of m(E), $m_1(E)$, $m_2(E)$, $m_3(E)$, $m_4(E)$ and $m_5(E)$ bars see Section B-B on sheet 10 of 27.

Note: Removal of existing diaphragms will be paid for as Concrete Removal.

TWO APPROACH SPANS
BILL OF MATERIAL

	Bar	No.	Size	Length	Shape
	d(E)	200	#5	26'-6"	
*	$a_1(E)$	140	#5	27'-4"	
	$a_2(E)$	100	#6	6'-6"	
	$a_3(E)$	4	#5	16'-11"	
	$a_4(E)$	8	#6	26'-8"	
	$a_6(E)$	170	#5	16'-9"	
	$b_3(E)$	152	#5	26'-8"	
	$b_4(E)$	132	#5	26'-9"	
	d(E)	120	#5	5'-7"	
	$d_2(E)$	116	#5	6'-11"	
	$e_8(E)$	56	#4	13'-2"	
	$e_9(E)$	4	#8	26'-9"	
	$e_{10}(E)$	4	#4	26'-9"	
	$h_1(E)$	12	#5	2'-3"	
	$h_2(E)$	12	#5	2'-3"	
	$h_3(E)$	24	#5	2'-0"	
	m(E)	32	#4	7'-1"	
	$m_1(E)$	16	#6	6'-0"	
	$m_2(E)$	4	#6	39'-6"	
	$m_3(E)$	8	#4	39'-6"	
	$m_4(E)$	4	#6	25'-9"	
	$m_5(E)$	8	#4	25'-9"	
	$s_1(E)$	96	#4	8'-0"	
	$s_2(E)$	96	#4	8'-3"	
	$v_1(E)$	136	#5	3'-9"	
	$v_2(E)$	100	#5	5'-6"	
	$v_3(E)$	192	#5	2'-0"	
*	$z_1(E)$	216	#5	2'-6"	
	$z_2(E)$	108	#5	4'-10"	
	Reinforcement Bars, Epoxy Coated			Pound	28,880
	Concrete Superstructure			Cu. Yd.	156
	Concrete Removal			Cu. Yd.	40.2

* Diagram for $a_1(E)$ and $z_1(E)$ bars on sht 9 of 27

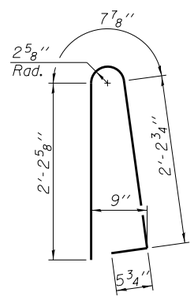

BAR d(E)

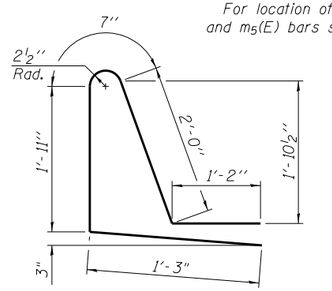

BAR $d_2(E)$

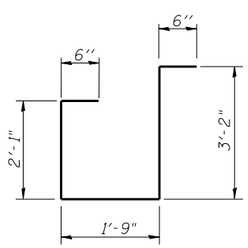

BAR $s_1(E)$

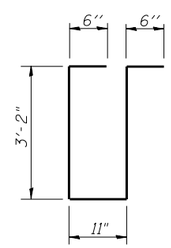

BAR $s_2(E)$

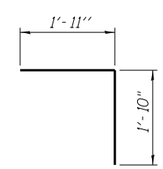

BAR $v_1(E)$

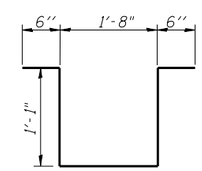

BAR $z_2(E)$

FILE NAME = CH12 over FAI-72.dgn	USER NAME =	DESIGNED - SAL	REVISED -
		CHECKED - MTH	REVISED -
	PLOT SCALE =	DRAWN - TJW	REVISED -
	PLOT DATE =	CHECKED - MTH	REVISED -

STATE OF ILLINOIS
DEPARTMENT OF TRANSPORTATION

VAULTED ABUTMENT APPROACH SPAN DETAILS
MECHANICSBURG ROAD OVER F.A.I.-72 - S.N. 084-0150

SHEET NO. 11 OF 27 SHEETS

F.A.I. RTE.	SECTION	COUNTY	TOTAL SHEETS	SHEET NO.
72	•	SANGAMON	194	123
• (84-10-1RS-3, 84-10-2RS-R)BR.I		CONTRACT NO. 72C90		
FED. ROAD DIST. NO. 6	ILLINOIS	FED. AID PROJECT		