NOTES:

1. ALL DIMENSIONS ARE IN INCHES (MILLIMETERS) UNLESS OTHERWISE SHOWN.
2. THE ANCHOR BOLTS AND RACEWAYS SHALL BE PROPERLY SECURED IN PLACE BEFORE THE CONCRETE IS PLACED IN THE FORMS.
3. THE CONTRACTOR AT HIS OPTION MAY SUBSTITUTE #4 (15 m) TIES AT 12" (304.8 m) CTRS. FOR THE #3 (3 m) SPIRAL. TACKWELDED TYPE BOLT MAY BE SUBSTITUTED FOR THE HOOK TYPE BOLT.
4. COLD BENDING OF THE HOOK BOLT SHALL NOT BE ALLOWED.
5. EXCAVATION FOR THE POLE FOUNDATION SHALL BE MADE WITH AN AUGER 24 INCHES (609.6 m) IN DIAMETER.
6. THE ENGINEER SHALL DETERMINE THE TYPE OF SOIL DURING EXCAVATION AND SELECT THE DESIGN DEPTH OF FOUNDATION FROM THE DESIGN TABLE USING THE DOMINANT CHARACTERISTIC OF THE SOIL ENCOUNTERED.
7. BARRIER WALL EXPANSION AND CONSTRUCTION JOINTS SHALL BE IN ACCORDANCE WITH STANDARD DETAIL 637001-02 AND 637006 AS APPLICABLE.

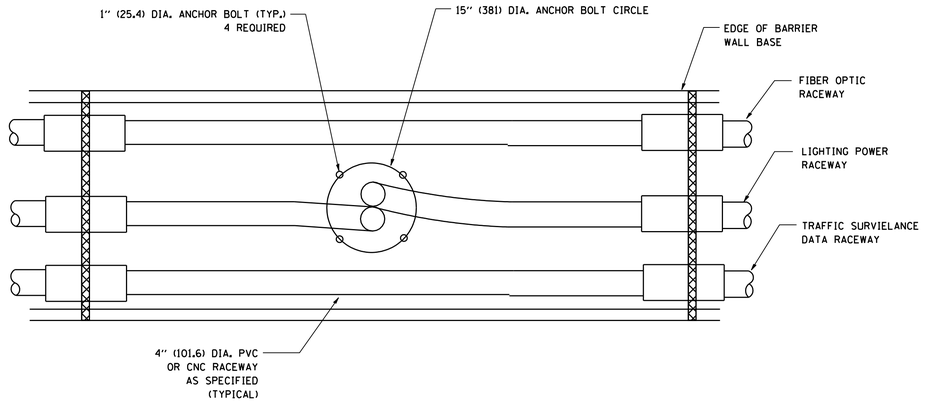

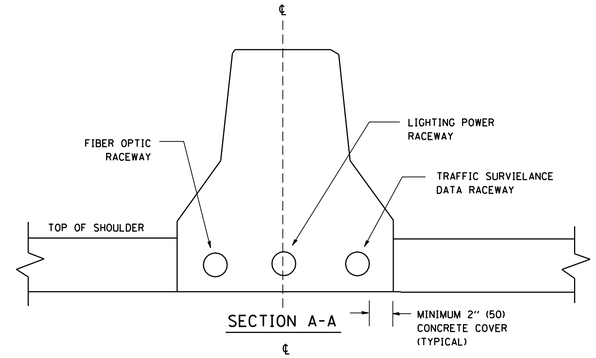

SECTION A-A

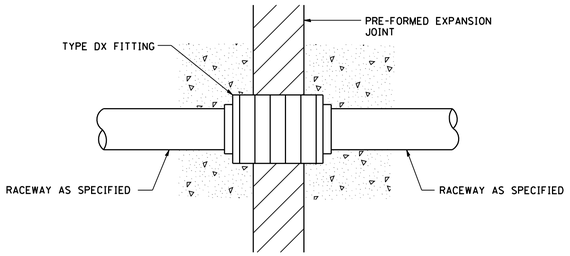

CONDUIT DEFLECTION FITTING DETAIL

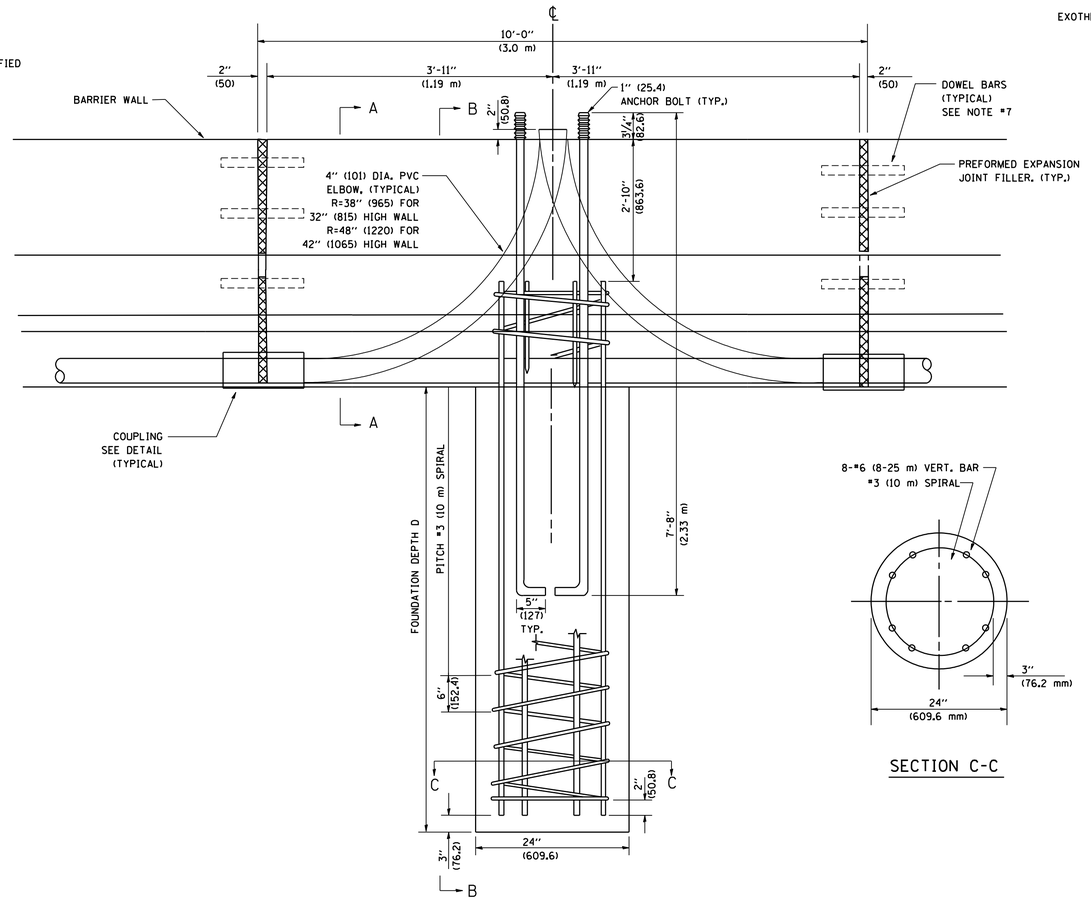

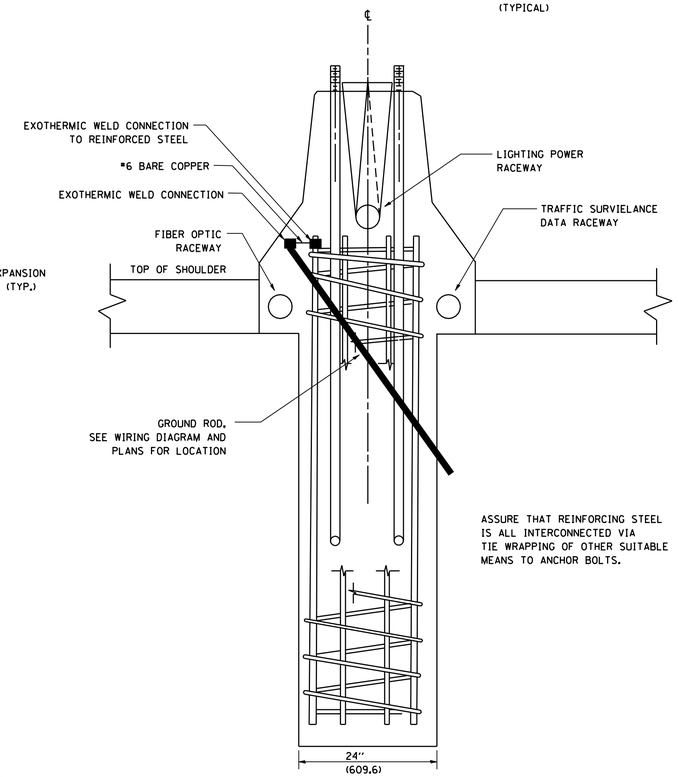

ASSURE THAT REINFORCING STEEL IS ALL INTERCONNECTED VIA TIE WRAPPING OF OTHER SUITABLE MEANS TO ANCHOR BOLTS.

SECTION B-B

SECTION C-C

FOUNDATION DEPTH

TYPE OF SOIL	FOUND FEPTH D	REINFORCEMENT IN FOUNDATION	
		VERTICAL BARS	SPIRAL
ROCK OR SOLIDIFIED SLAG	5'-0" (1.52 m)	NONE	NONE
DENSE SAND	7'-9" (2.36 m)	8-#6 x 9'-0" (8-20 m x 2.74 m)	#3 x 90' (3 m x 27.43 m)
MEDIUM SAND	8'-3" (2.51 m)	8-#6 x 9'-5" (8-20 m x 2.87 m)	#3 x 94' (3 m x 28.65 m)
LOOSE SAND	9'-0" (2.74 m)	8-#6 x 10'-2" (8-20 m x 3.09 m)	#3 x 100' (3 m x 30.48 m)
STIFF CLAY	7'-0" (2.13 m)	8-#6 x 10'-8" (8-20 m x 2.48 m)	#3 x 80' (3 m x 24.38 m)
MEDIUM CLAY	9'-6" (2.89 m)	8-#6 x 10'-8" (8-20 m x 3.25 m)	#3 x 104' (3 m x 31.69 m)
SOFT CLAY	13'-0" (3.96 m)	8-#6 x 14'-2" (8-20 m x 4.32 m)	#3 x 144' (3 m x 43.89 m)

DESIGN: 80 MPH AASHTO

FILE NAME = W:\diststd\22x34\be322.dgn	USER NAME = gaglianobt	DESIGNED -	REVISED - 04-07-04	STATE OF ILLINOIS DEPARTMENT OF TRANSPORTATION
		DRAWN -	REVISED -	
	PLOT SCALE = 50.0000 ' / IN.	CHECKED -	REVISED -	
	PLOT DATE = 1/4/2008	DATE -	REVISED -	

24" (609.6 mm) DIA. LIGHT POLE FOUNDATION
INTEGRAL WITH DOUBLE FACE BARRIER WALL

SCALE: NONE | SHEET NO. 1 OF 1 SHEETS | STA. TO STA.

F.A. RTE.	SECTION	COUNTY	TOTAL SHEETS	SHEET NO.
	BE-322	CONTRACT NO.		
FED. ROAD DIST. NO. 1	ILLINOIS	FED. AID PROJECT		