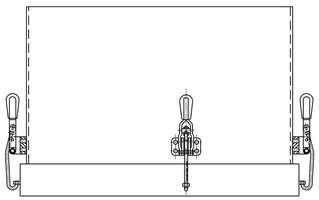

TOP VIEW

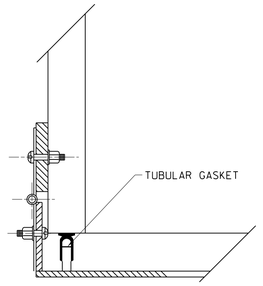

HINGE DETAIL

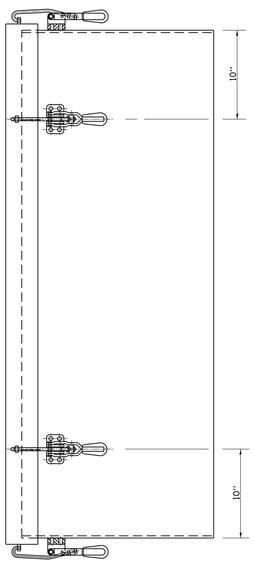

SIDE VIEW

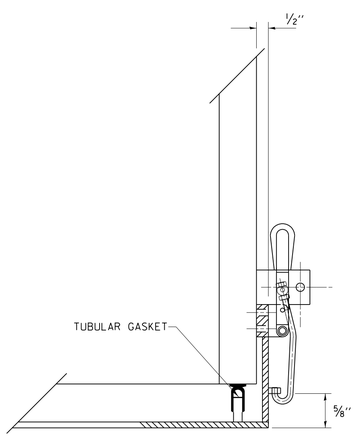

LATCH DETAIL

HANDHOLE DOOR DETAILS

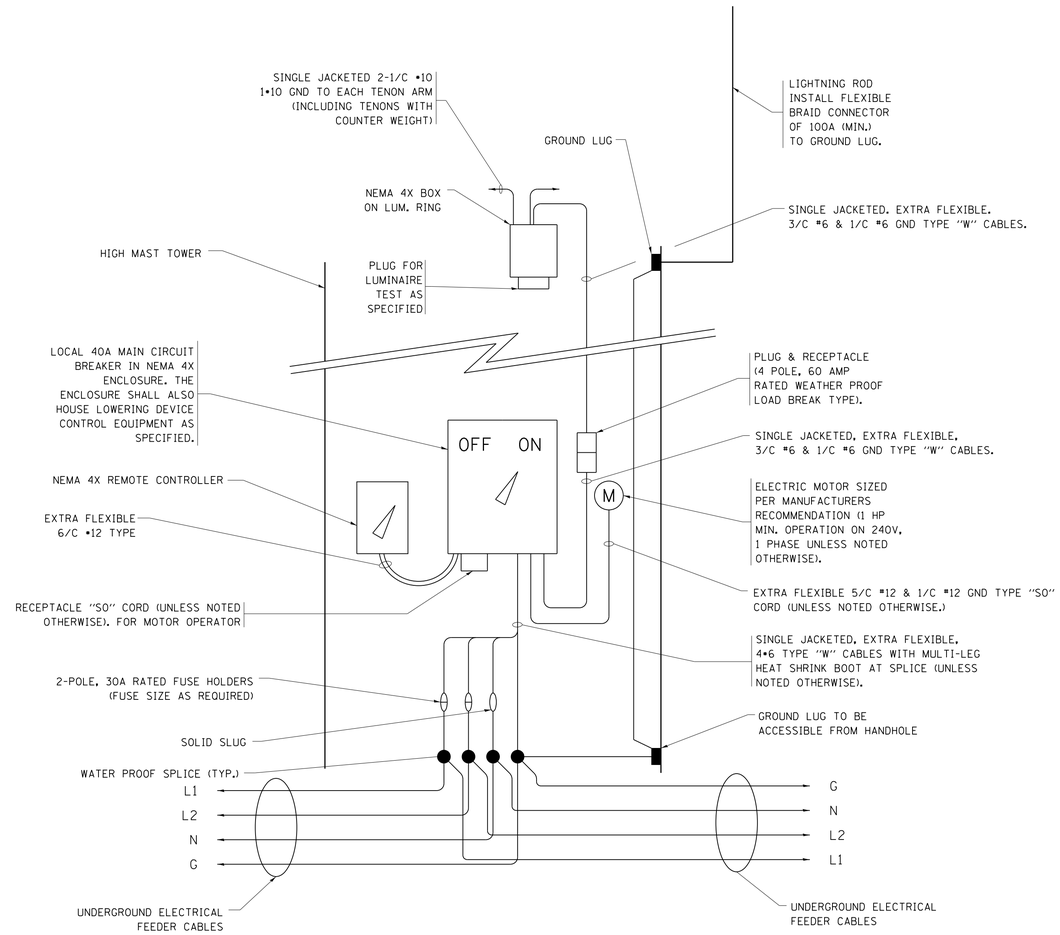

HIGH MAST POLE WIRING DIAGRAM

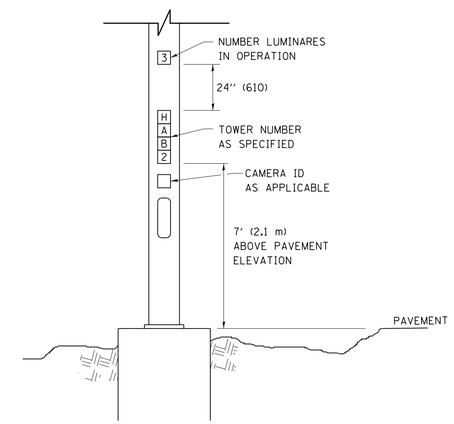

LIGHT TOWER NUMBERING DETAIL

FILE NAME = c:\pw_work\pwidot\bauerdl\d0108315\be500.dgn	USER NAME = bauerdl	DESIGNED -	REVISED - R. TOMSONS 08-04-03	STATE OF ILLINOIS DEPARTMENT OF TRANSPORTATION	HIGH MAST LIGHT TOWER 90 FT TO 110 FT (27 m TO 34 m)	F.A. RTE.	SECTION	COUNTY	TOTAL SHEETS / SHEET NO.
		DRAWN -	REVISED - R. TOMSONS 05-11-09						
	PLOT SCALE = 50.0000 ' / in.	CHECKED -	REVISED - R. TOMSONS 09-02-10				BE-500	CONTRACT NO.	
	PLOT DATE = 2/27/2013	DATE -	REVISED - R. TOMSONS 02-27-13		SCALE: NONE / SHEET NO. 3 OF 3 SHEETS / STA. / TO STA.	FED. ROAD DIST. NO. 1	ILLINOIS	FED. AID PROJECT	

be500.dgn 2/27/2013 8:12:43 AM User=bauerdl