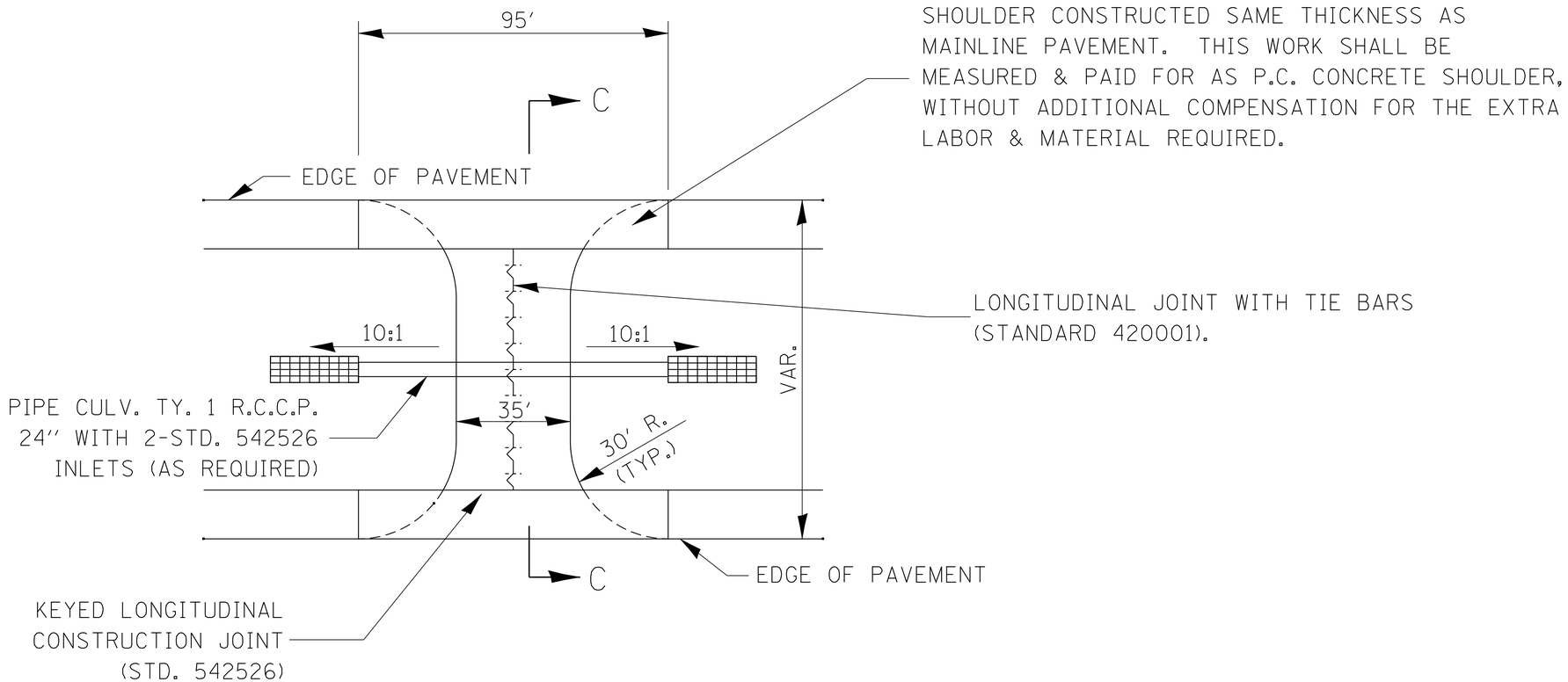

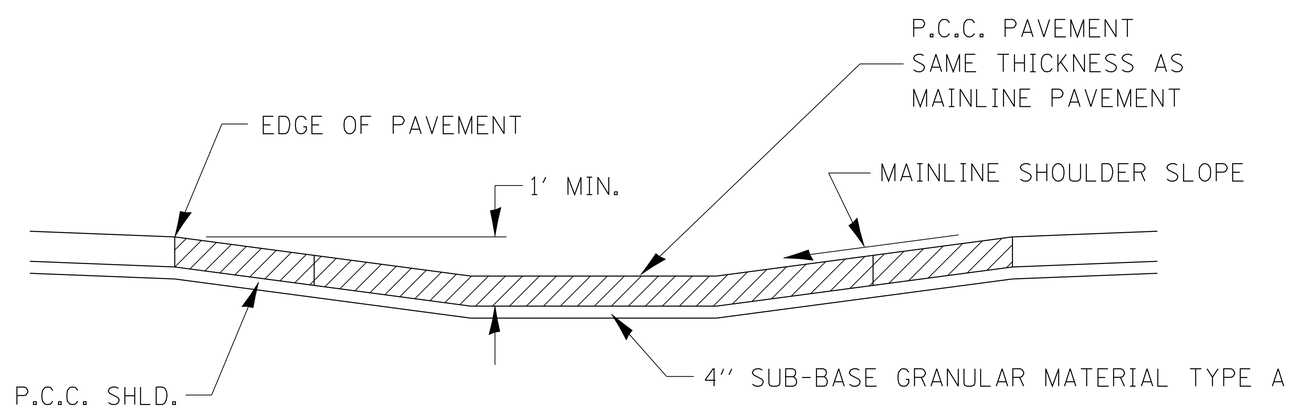

SECTION C-C

CONCRETE MAINTENANCE CROSSOVER

420–1