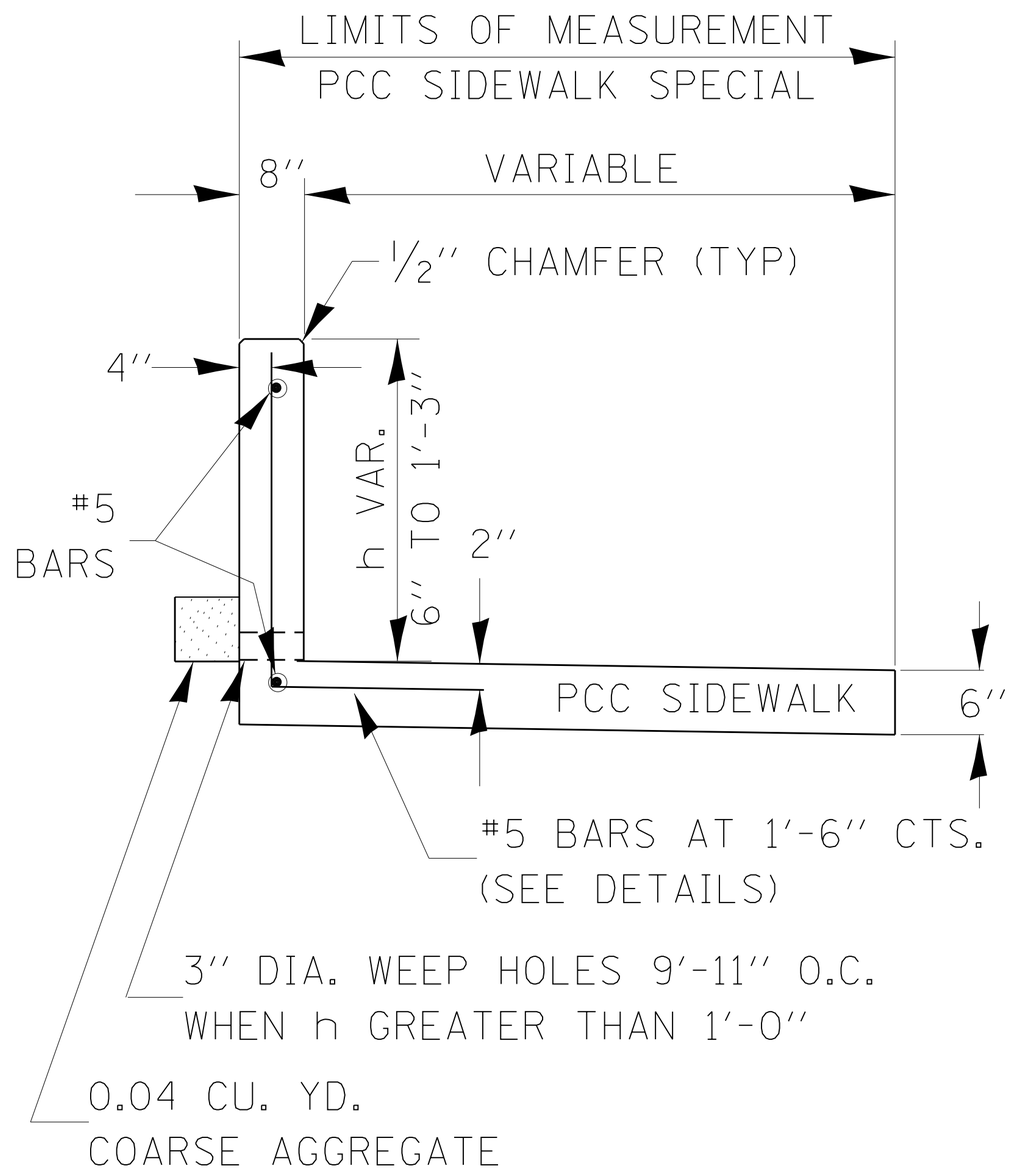

TYPE 1

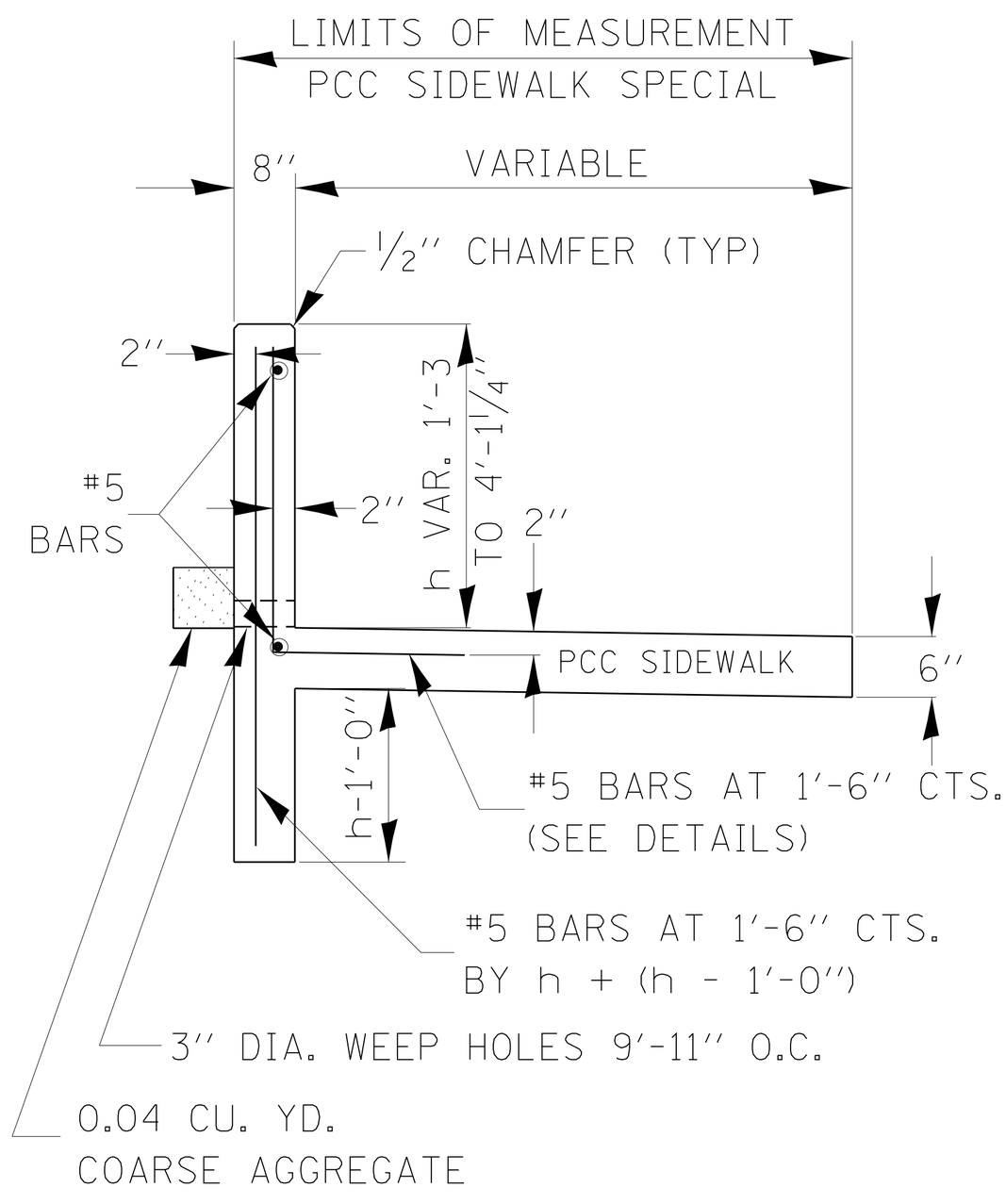

TYPE 2

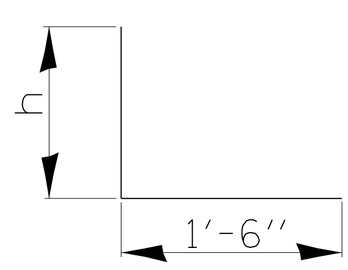

BENT BAR DETAIL

PCC SIDEWALK SPECIAL WITH RETAINING WALL

424–30