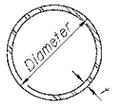

METAL SHELL PILE TABLE

Designation and outside diameter	Wall thickness t	Weight per foot (Lbs./ft.)	Inside volume (yd.³/ft.)
PP12	0.179"	22.60	0.0274
PP12	0.250"	31.37	0.0267
PP14	0.250"	36.71	0.0368
PP14	0.312"	45.61	0.0361

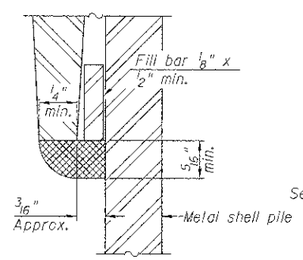

DETAIL A

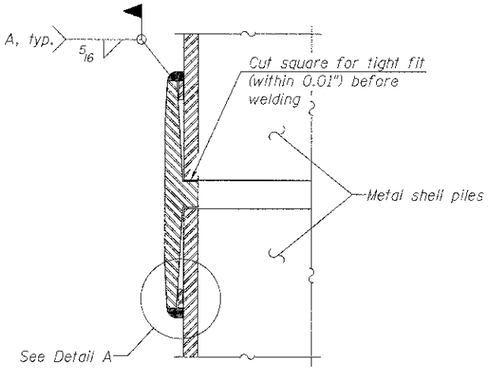

Notes:
The 1/8" x 1/2" min. fill bar may be constructed of 2 bars with a 1/8" max. gap between them.
Pile segments shall be driven to solid contact with spiicer before welding.

WELDED COMMERCIAL SPLICE

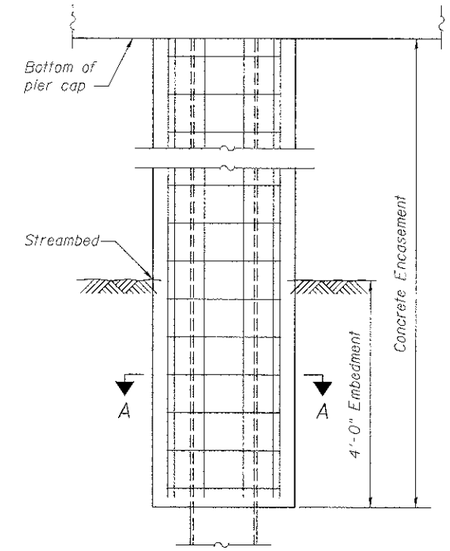

ELEVATION

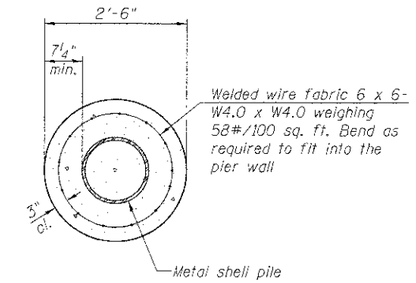

SECTION A-A

CONCRETE ENCASEMENT AT PIERS

Welded Wire Fabric shall be included with the cost of Concrete Encasement.

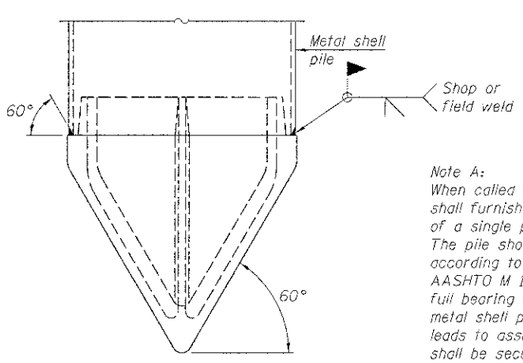

Note A:
When called for on the plans, the Contractor shall furnish metal shell pile shoes consisting of a single piece conical pile point as shown. The pile shoes shall be cast in one piece steel according to either ASTM A 148 Grade 90-60 or AASHTO M 103 Grade 65-35 and shall provide full bearing over the full circumference of the metal shell pile. The pile shoe shall have tapered leads to assure proper alignment and fitting and shall be secured to the pile with a circumferential weld.

METAL SHELL PILE SHOE ATTACHMENT

(See Note A)

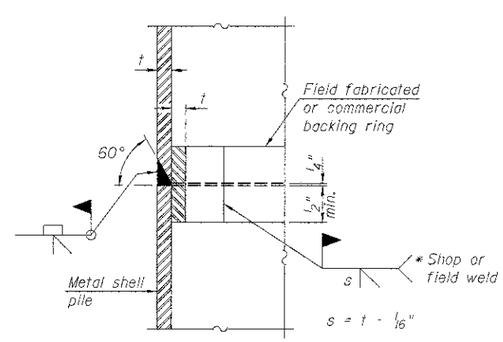

COMPLETE PENETRATION WELD SPLICE

* Field fabricated backing ring may be made from pile shell by removing segment to allow reducing circumference and vertically rejoin with partial joint penetration weld.

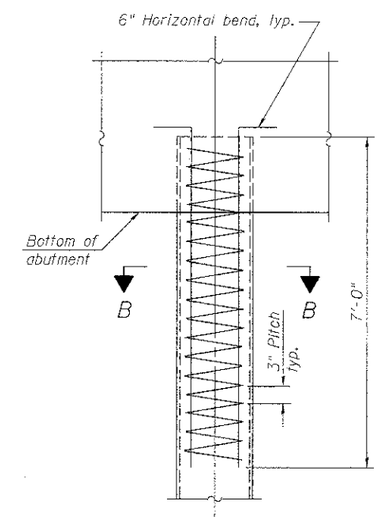

ELEVATION

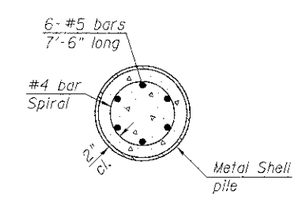

SECTION B-B

METAL SHELL REINFORCEMENT AT ABUTMENTS

Metal Shell reinforcement at abutments shall be included with the cost of Furnishing Metal Shell Piles.

Note:
The metal shell piles shall be according to ASTM A 252 Grade 3.

FILE NAME = s:\oi\65800-69999\69842\007\micro\cadd sheets\structural\056-3192-63666-015-MPILE.dgn

STRAND ASSOCIATES® IDFPR NO. 184-001273
1170 SOUTH HOLBROOK ROAD
JOLIET, ILLINOIS 60431
(815) 744-4200

USER NAME = brianf	DESIGNED RRD	REVISED -	
	CHECKED AJS	REVISED -	
PLOT SCALE =	DRAWN BJF	REVISED -	
PLOT DATE = 8/23/2012	CHECKED RRD	REVISED -	

MCHENRY COUNTY DIVISION OF TRANSPORTATION
HILL ROAD BRIDGE OVER
NORTH BRANCH NIPPERSINK CREEK

METAL SHELL PILE DETAILS
STRUCTURE NO. 056-3192

SHEET NO. 15 OF 27 SHEETS

TR	SECTION	COUNTY	TOTAL SHEETS	SHEET NO.
21	08-00356-00-BR	MCHENRY	77	45
		CONTRACT NO. 63666		
		ILLINOIS FED. AID PROJECT		