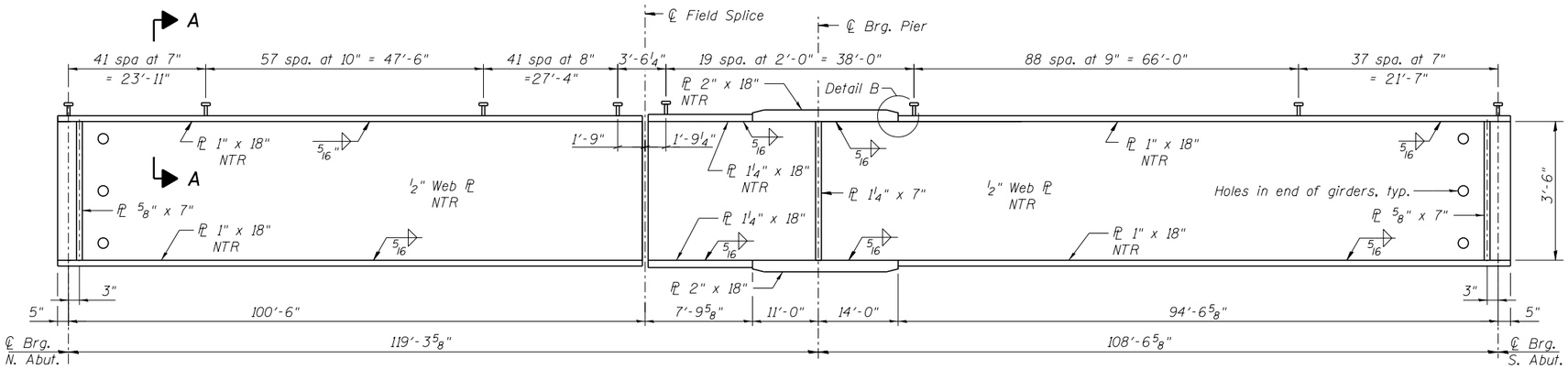

GIRDER ELEVATION

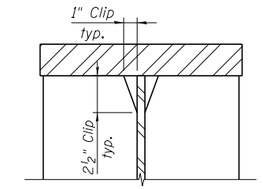

DETAIL C

(Typical top & bottom flanges)

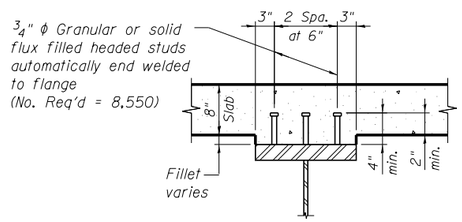

SECTION A-A

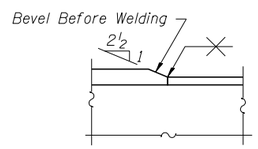

DETAIL B

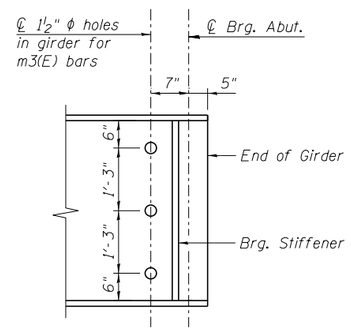

END OF GIRDER ELEVATION

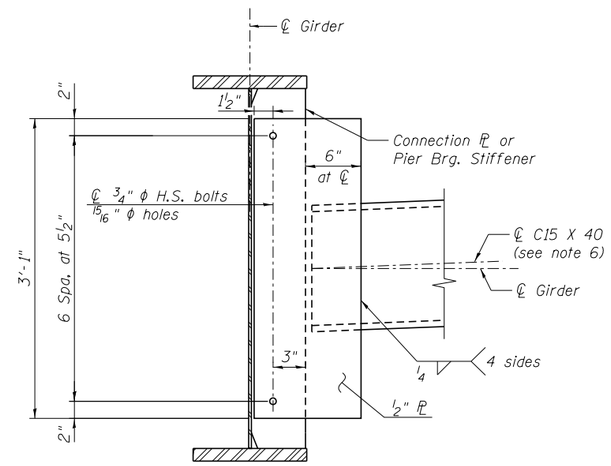

INTERIOR DIAPHRAGM

(No. diaphragms required = 88)

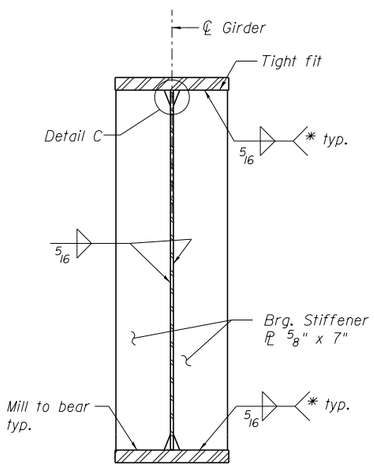

BEARING STIFFENER AT ABUT.

(No. plates required = 40)

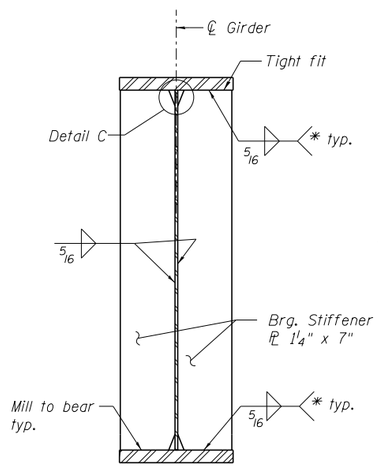

BEARING STIFFENER AT PIER

(No. plates required = 20)

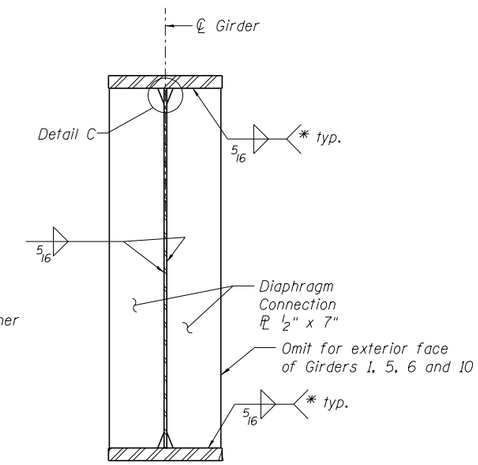

CONNECTION PLATE

(No. plates required = 168)

* Terminate weld ¼" from outside edges of PLs

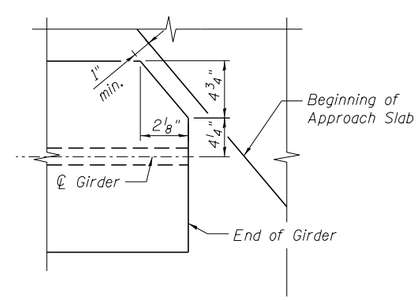

END OF GIRDER COPING DETAIL

(Top Flange Only)

NOTES:

1. All Girder webs and flanges shall be AASHTO M270 Grade 50 steel.
2. All diaphragms shall be installed as steel is erected and secured with erection pins and bolts except as otherwise noted. Individual diaphragms at supports may be temporarily disconnected to install bearing anchor rods.
3. "NTR" denotes plates to which notch toughness requirements are applicable.
4. Load carrying components designated "NTR" shall conform to the Impact Testing Requirements, Zone 2.
5. Two hardened washers required for each set of oversized holes.
6. Alternate channels C15x50 are permitted to facilitate material acquisition. Calculated weight of structural steel is based on C15x40 sections. The alternate, if utilized, shall be provided at no extra cost to the department.

benesch engineers · scientists · planners
Alfred Benesch & Company
205 North Michigan Avenue, Suite 2400
Chicago, Illinois 60601
312-565-0450 Job No. 10056

FILE NAME = 0900165_68620_21_stdtl.dgn	USER NAME = mbecker	DESIGNED - JLS/DTS	REVISED -
		CHECKED - MRB	REVISED -
	PLOT SCALE =	DRAWN - PRT	REVISED -
	PLOT DATE = 7/16/2012	CHECKED - MRB	REVISED -

STATE OF ILLINOIS
DEPARTMENT OF TRANSPORTATION

GIRDER DETAILS 1 OF 3
STRUCTURE NO. 090-0165 / 0166
SHEET NO. SA21 OF SA47 SHEETS

F.A.I. RTE.	SECTION	COUNTY	TOTAL SHEETS	SHEET NO.
74	90-(14R;(14HB-4,14,14HVB)BR)	TAZEWELL	2433	1885
		CONTRACT NO. 68620		
		ILLINOIS FED. AID PROJECT		

x:\10000s\10056\engineering_documents_phase_ii\1155over174\final\0900165_68620_21_stdtl.dgn 10:53:20 AM 7/16/2012