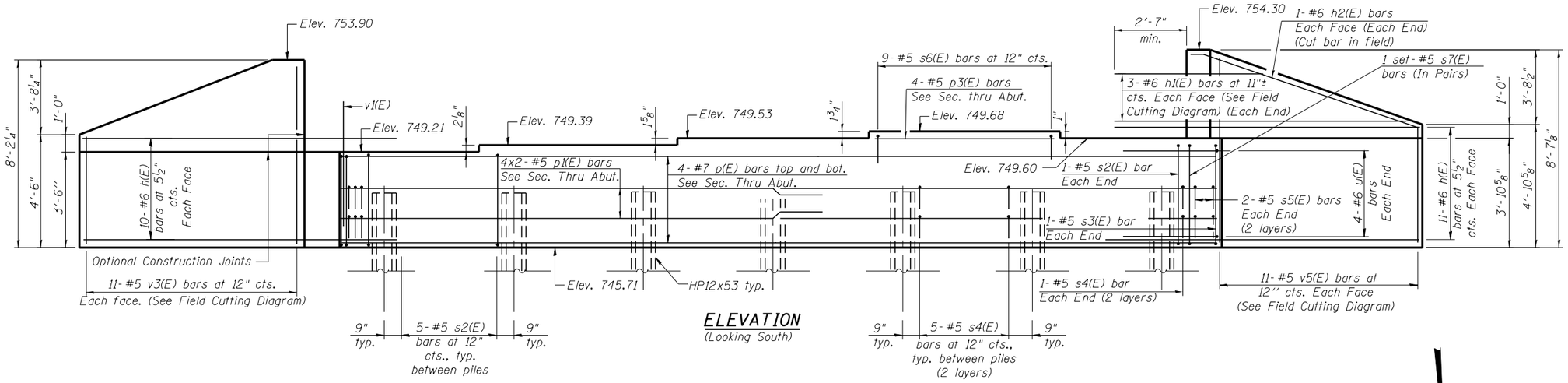

ELEVATION
(Looking South)

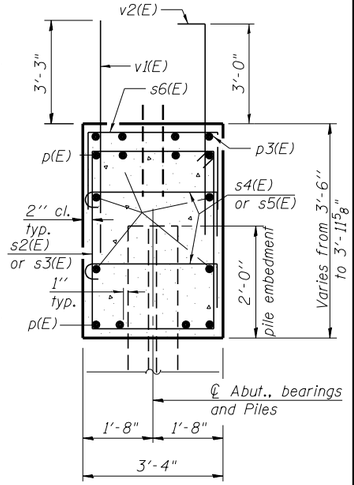

SEC. THRU ABUT.

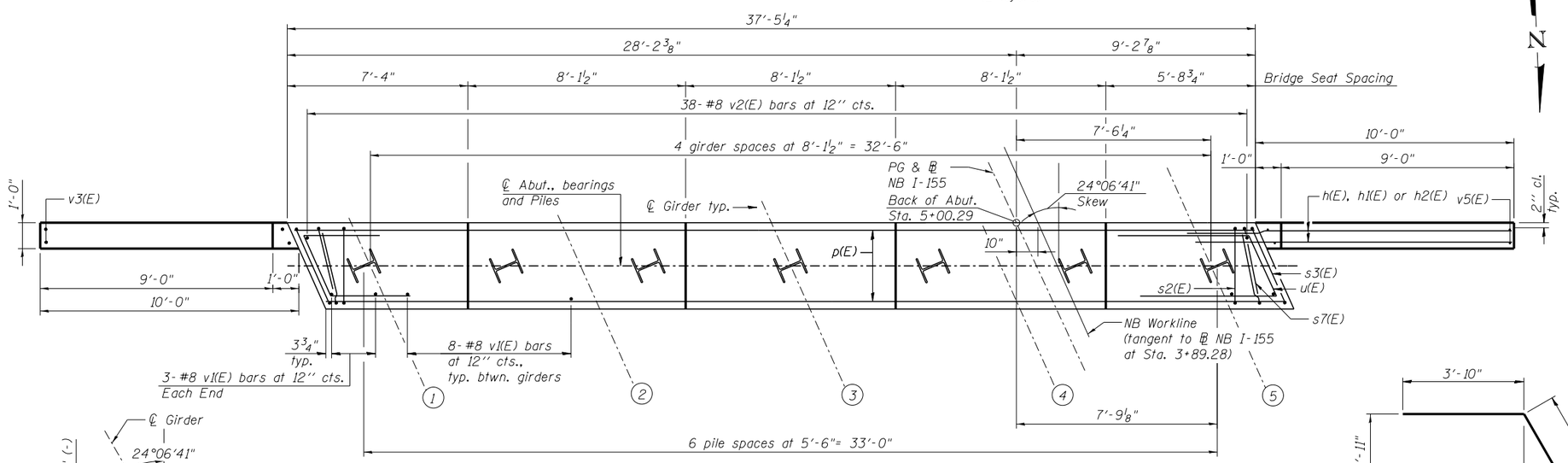

PLAN

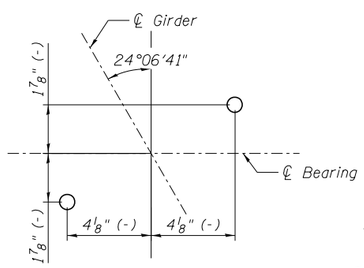

ANCHOR BOLT DETAIL

MIN. BAR LAP
#5 bar = 3'-3"

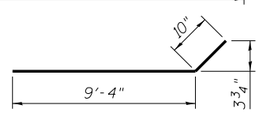

BAR h2(E)

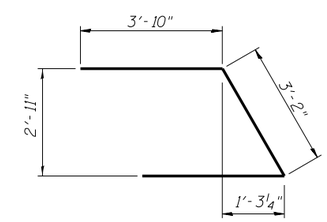

BAR u(E)

BILL OF MATERIAL

Bar	No.	Size	Length	Shape
h(E)	42	#6	12'-5"	
h1(E)	6	#6	19'-11"	
h2(E)	4	#6	10'-2"	
p(E)	8	#7	36'-11"	
p1(E)	8	#5	20'-1"	
p3(E)	4	#5	7'-9"	
s2(E)	32	#5	13'-3"	
s3(E)	2	#5	13'-11"	
s4(E)	64	#5	4'-4"	
s5(E)	8	#5	4'-8"	
s6(E)	9	#5	6'-10"	
s7(E)	4	#5	9'-2"	
u(E)	8	#6	10'-10"	
v1(E)	38	#8	6'-6"	
v2(E)	38	#8	7'-7"	
v3(E)	11	#5	11'-10"	
v5(E)	11	#5	12'-8"	
Concrete Structures		Cu. Yd.	22.4	
Reinforcement Bars, Epoxy Coated		Pound	4,570	
Furnishing Steel Piles HP12X53		Foot	546	
Driving Piles		Foot	546	

Bars indicated thus 4x2- #5 etc. indicates 4 lines of bars with 2 lengths per line.

PILE DATA
Type: HP12x53
Nominal Required Bearing: 333 kips
Factored Resistance Available: 183 kips
Est. Length: 78 ft.
No. Production Piles: 7
No. Test Piles: 0

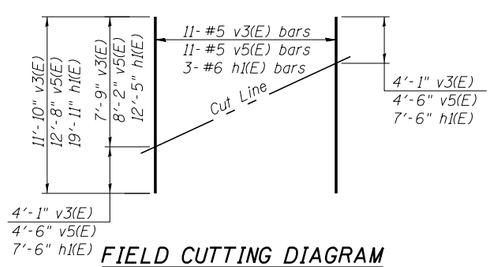

FIELD CUTTING DIAGRAM
Order v3(E), v5(E) and h1(E) full length. Cut as shown and use remainder of bars in opposite face.

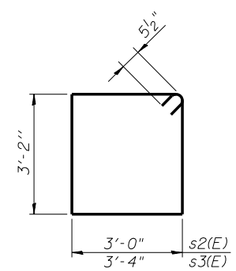

BARS s2(E) & s3(E)

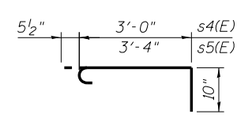

BARS s4(E) & s5(E)

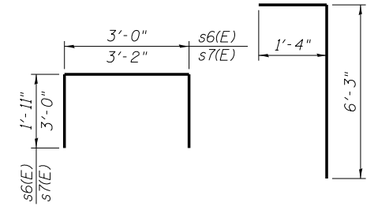

BARS s6(E) & s7(E)

BAR v2(E)

NOTES:
1. For details of piles, see sheet SA30.
2. Pour steps monolithically with cap.
3. Adjust s7(E) bars in field to form a single closed stirrup between the s2(E) bar and the s3(E) bar.
4. h1(E) or h2(E) bars shall not be embedded in the approach slab.
5. Adjust bar spacing to avoid anchor bolt locations.

benesch engineers · scientists · planners
Alfred Benesch & Company
205 North Michigan Avenue, Suite 2400
Chicago, Illinois 60601
312-565-0450 Job No. 10056

FILE NAME = 0900165_68620_26_abut3.dgn	USER NAME = mbecker	DESIGNED - DTS	REVISED -
		CHECKED - SLD	REVISED -
	PLOT SCALE =	DRAWN - PRT	REVISED -
	PLOT DATE = 7/16/2012	CHECKED - SLD	REVISED -

STATE OF ILLINOIS
DEPARTMENT OF TRANSPORTATION

NB SOUTH ABUTMENT DETAILS
STRUCTURE NO. 090-0165 / 0166
SHEET NO. SA26 OF SA47 SHEETS

F.A.I. RTE.	SECTION	COUNTY	TOTAL SHEETS	SHEET NO.
74	90-[14R;(14HB-4,14,14HVB)BR]	TAZEWELL	2433	1890
		CONTRACT NO. 68620		
		ILLINOIS FED. AID PROJECT		

x:\10000s\10056\engineering_documents_phase_ii\1155over174\final\0900165_68620_26_abut3.dgn 11:14:36 AM 7/16/2012