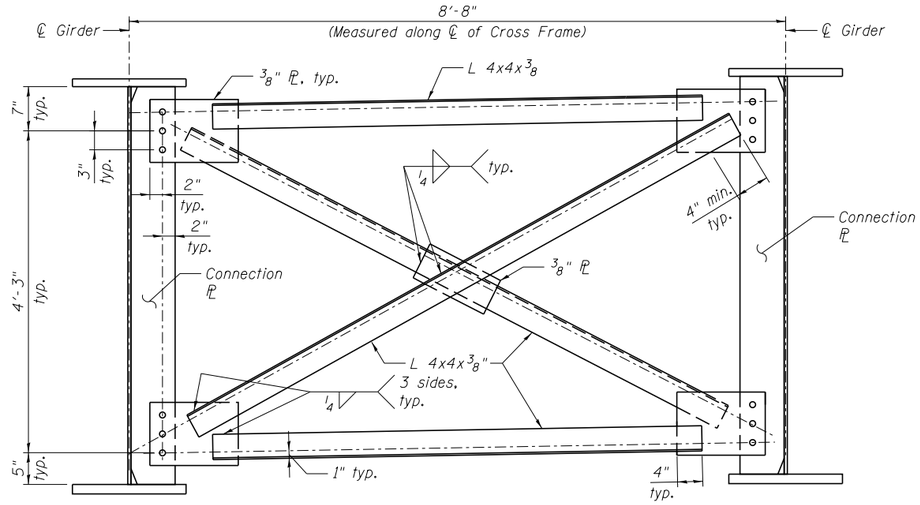

INTERIOR CROSS FRAME CF1

(No. cross frames required = 46)

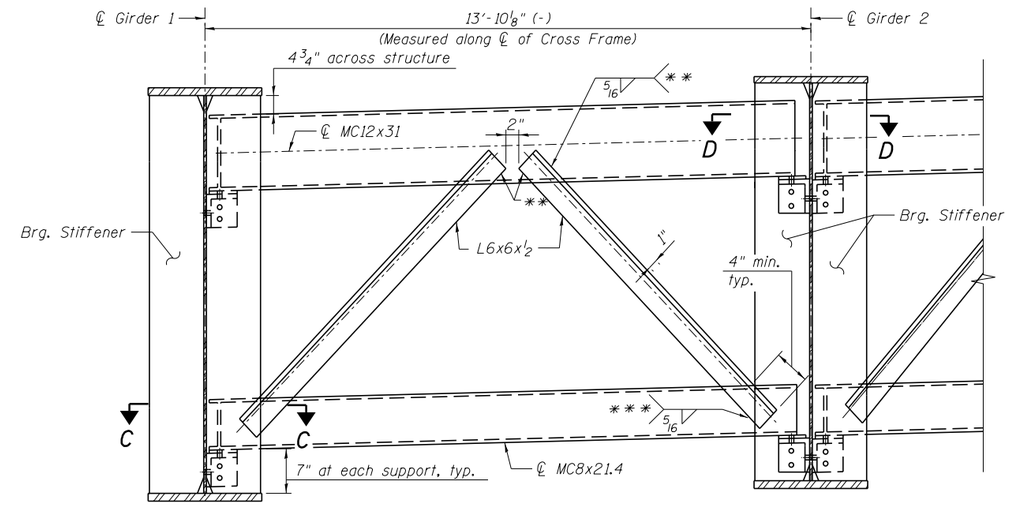

END CROSS FRAME CF3

(No. cross frames required = 26)

** Use a minimum 2 bolt connection for stage construction

*** 3 sides, to back face of channel only, typ.

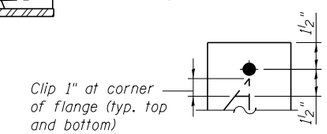

DETAIL E

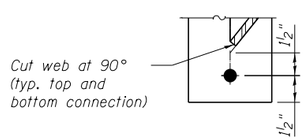

DETAIL F

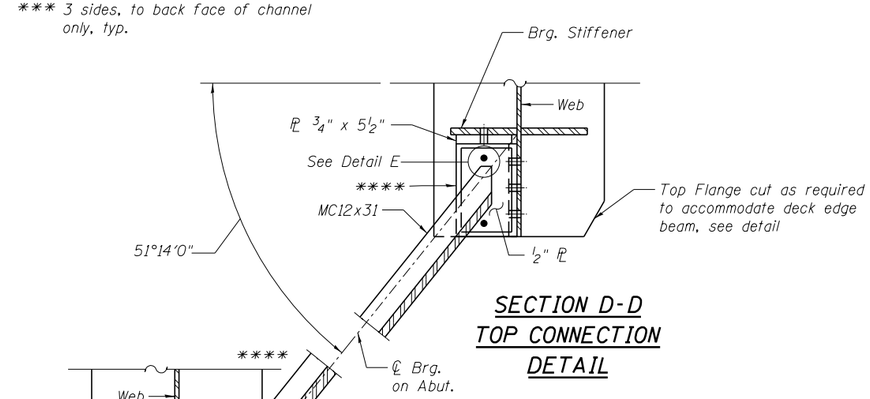

SECTION D-D TOP CONNECTION DETAIL

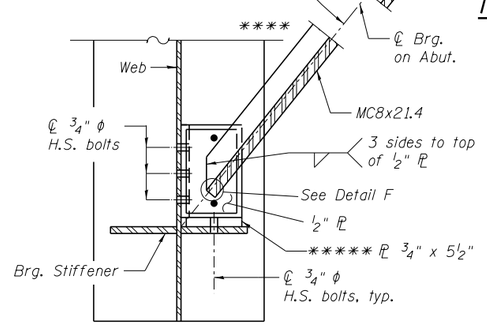

SECTION C-C BOTTOM CONNECTION DETAIL

**** Use L6"x6"x3/4"

***** Weld 3/4" x 5 1/2" plate to seat as shown in Detail G and Detail H

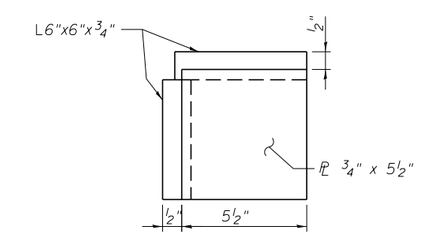

DETAIL G

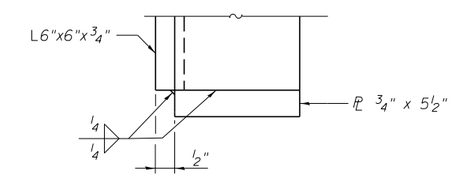

DETAIL H

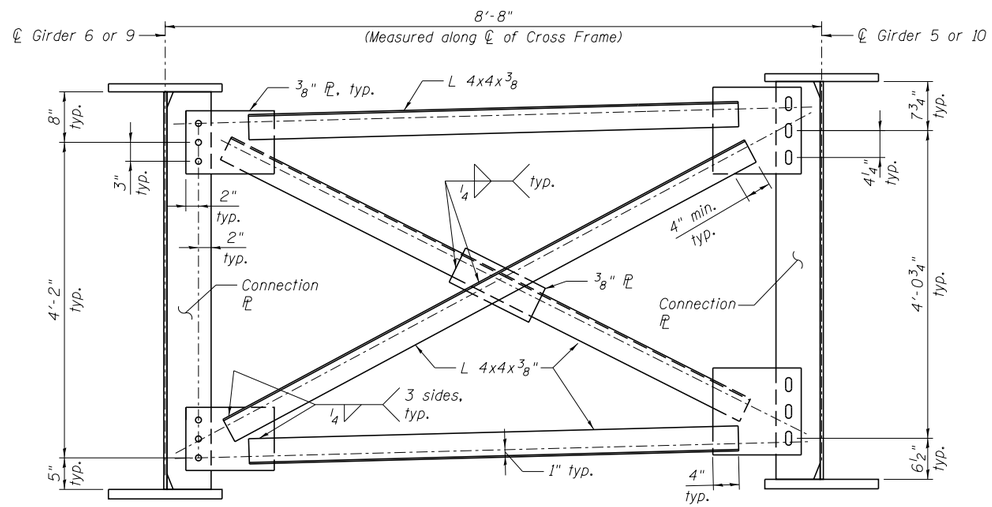

INTERIOR CROSS FRAME CF2

(No. cross frames required = 8)

NOTES:

1. All cross frames shall be installed as steel is erected and secured with erection pins and bolts except as otherwise noted. Individual cross frames at supports may be temporarily disconnected to install bearing anchor rods.
2. Two hardened washers required for each set of oversized holes.
3. Place diaphragm with channel flanges outward from abutment backwall.
4. See sheet SB27 for slotted hole details related to Interior Cross Frame CF2.

benesch engineers · scientists · planners
Alfred Benesch & Company
205 North Michigan Avenue, Suite 2400
Chicago, Illinois 60601
312-565-0450 Job No. 10056

FILE NAME = 0900167_68620_26_stdt2.dgn	USER NAME = mbecker	DESIGNED - MFB/AWH	REVISED -	STATE OF ILLINOIS DEPARTMENT OF TRANSPORTATION	GIRDER DETAILS 2 OF 4 STRUCTURE NO. 090-0167	F.A.I. RTE.	SECTION	COUNTY	TOTAL SHEETS / SHEET NO.
		CHECKED - MRB	REVISED -			74	90-(14R;14HB-4,14,14HVB)BR1	TAZEWELL	2433 / 1937
	PLOT SCALE =	DRAWN - PRT	REVISED -					CONTRACT NO. 68620	
	PLOT DATE = 7/16/2012	CHECKED - MRB	REVISED -		SHEET NO. SB26 OF SB65 SHEETS		ILLINOIS FED. AID PROJECT		

x:\10000s\10056\engineering_documents_phase_ii\I74overJefferson\Final\0900167_68620_26_stdt2.dgn 11:08:35 AM 7/16/2012