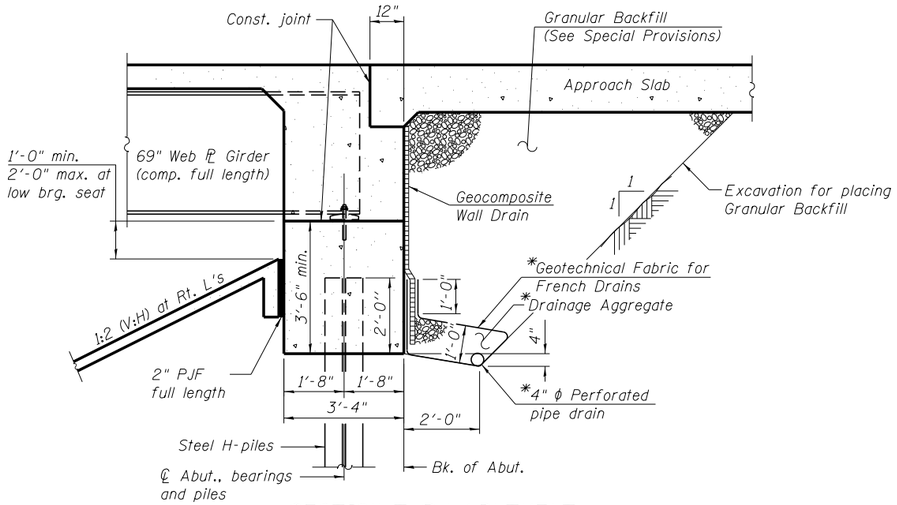

SECTION THRU ABUTMENT

(Horiz. dim. at Rt. L's)

*Included in the cost of Pipe Underdrains for Structures.

Note:
All drainage system components shall extend to 2'-0" from the end of each wingwall except an outlet pipe shall extend until intersecting with the side slopes. The pipes shall drain into concrete headwalls. (See Article 601.05 of the Standard Specifications and Highway Standard 601101).

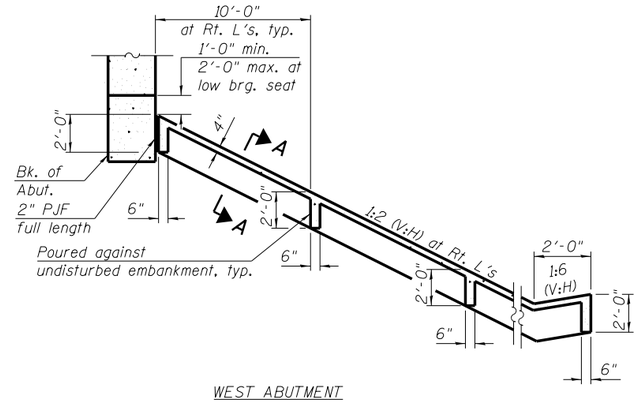

WEST ABUTMENT

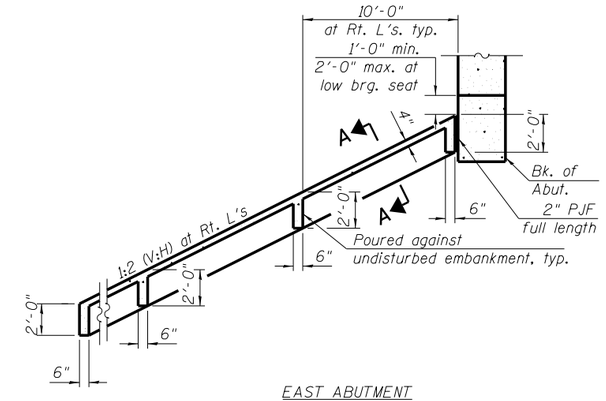

EAST ABUTMENT

SLOPEWALL DETAILS

(Slopewall shall be reinforced with welded wire fabric, 6 in. x 6 in. - W4.0 x W4.0, weighing 58 lbs. per 100 sq. ft.)

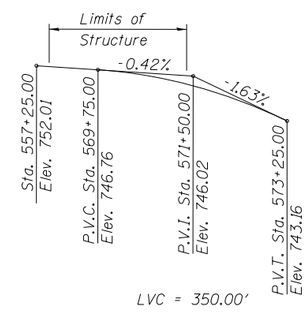

PROFILE GRADE

(℄ I-74 EB & WB)

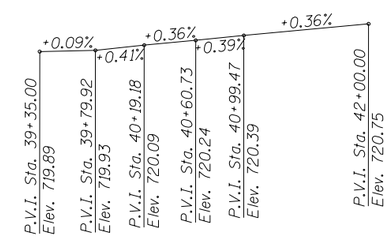

PROFILE GRADE

(℄ US 150)

CURVE DATA ℄ I-74

Δ = 13°36'59" (RT)
D = 0°28'00"
T = 1,465.80'
L = 2,917.79'
E = 87.19'
R = 12,277.67'
S.E. = RC
P.C. = Sta. 562+26.87
P.T. = Sta. 591+44.66
P.I. = Sta. 576+92.67

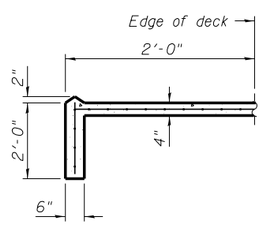

SECTION A-A

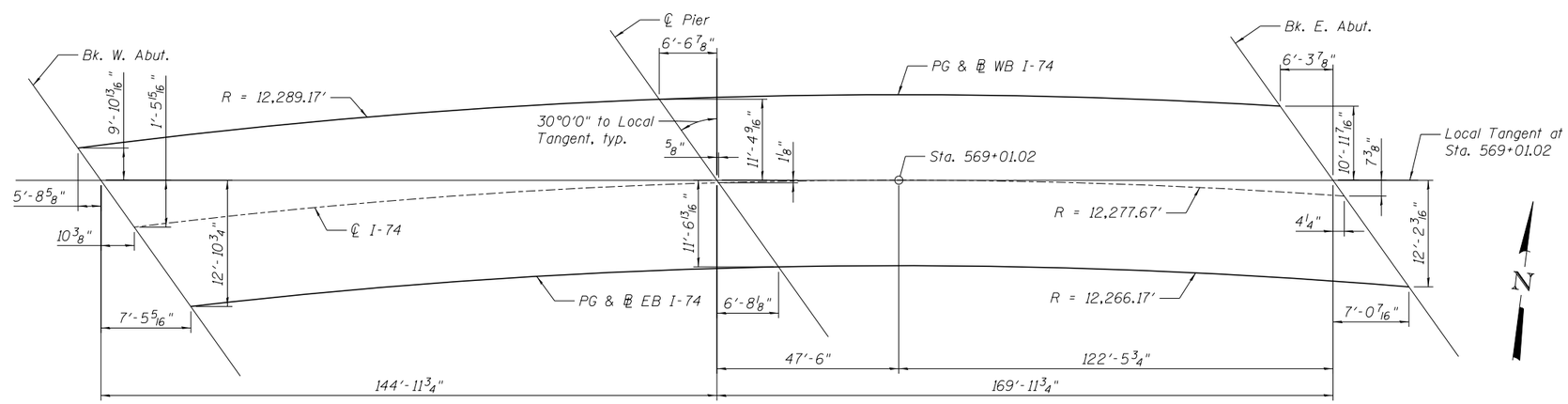

OFFSET SKETCH

benesch
engineers · scientists · planners
Alfred Benesch & Company
205 North Michigan Avenue, Suite 2400
Chicago, Illinois 60601
312-565-0450 Job No. 10056

FILE NAME = 0900169_68620_03_gndt2.dgn	USER NAME = mbecker	DESIGNED - MFB/DTS	REVISED -	STATE OF ILLINOIS DEPARTMENT OF TRANSPORTATION	GENERAL DATA 2 OF 2 STRUCTURE NO. 090-0169	F.A.I. RTE.	SECTION	COUNTY	TOTAL SHEETS	SHEET NO.
		CHECKED - MRB/AAY	REVISED -			74	90-(14R;(14HB-4,14,14HVB)BR)	TAZEWELL	2433	1979
	PLOT SCALE =	DRAWN - MFB	REVISED -					CONTRACT NO. 68620		
	PLOT DATE = 7/16/2012	CHECKED - MRB	REVISED -		SHEET NO. SC3 OF SC63 SHEETS		ILLINOIS FED. AID PROJECT			

7/16/2012 11:19:08 AM x:\10000s\10056\engineering_documents_phase_ii\I74over_Jackson\Final\0900169_68620_03_gndt2.dgn