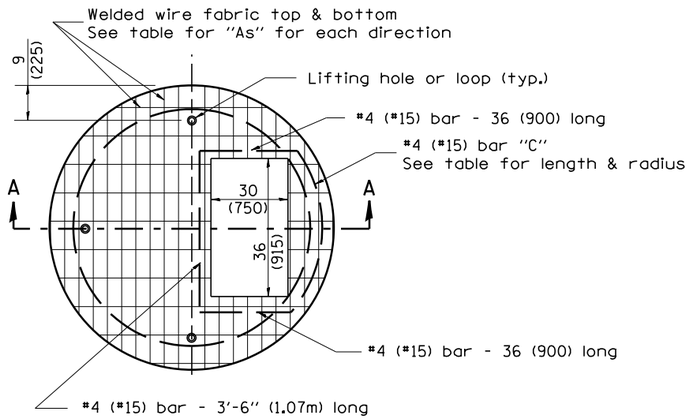

PLAN

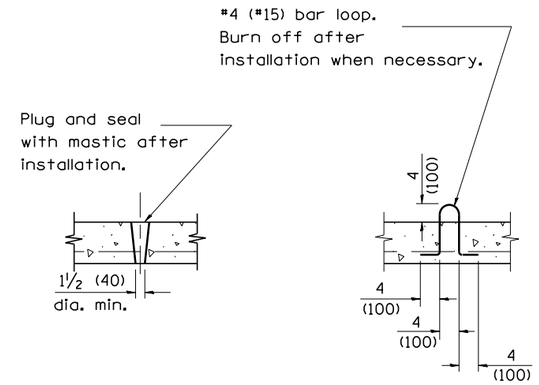

LIFTING HOLE OR LIFTING LOOP
TYPICAL

(3 required per slab)

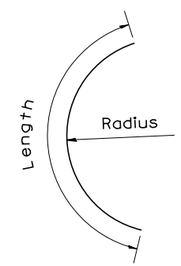

BAR "C"

TABLE

D	T	D_o (min.)	t	Reinforcement "As" W.W.F. each direction	Bar size	No. 15 (No. 4) Bar C Length	No. 15 (No. 4) Bar C Radius
4' (1.2m)	5 (125)	4'-10" (1.5m)	6 (150)	0.70 sq. inch/lin. ft. (1480mm ²/m)	No. 15 (No. 5)	1.35m (4'-6")	660 (26)
5' (1.5m)	6 (150)	6'-0" (1.8m)	8 (200)	0.70 sq. inch/lin. ft. (1480mm ²/m)	No. 15 (No. 5)	1.5m (5'-0")	810 (32)
6' (1.8m)	7¾ (195)	7'-3½" (2.2m)	8 (200)	0.88 sq. inch/lin. ft. (1860mm ²/m)	No. 20 (No. 6)	1.8m (6'-0")	965 (38)
8' (2.4m)	9 (225)	9'-6" (2.9m)	10 (250)	0.88 sq. inch/lin. ft. (1860mm ²/m)	No. 20 (No. 6)	2.3m (7'-6")	1.27m (4'-2")

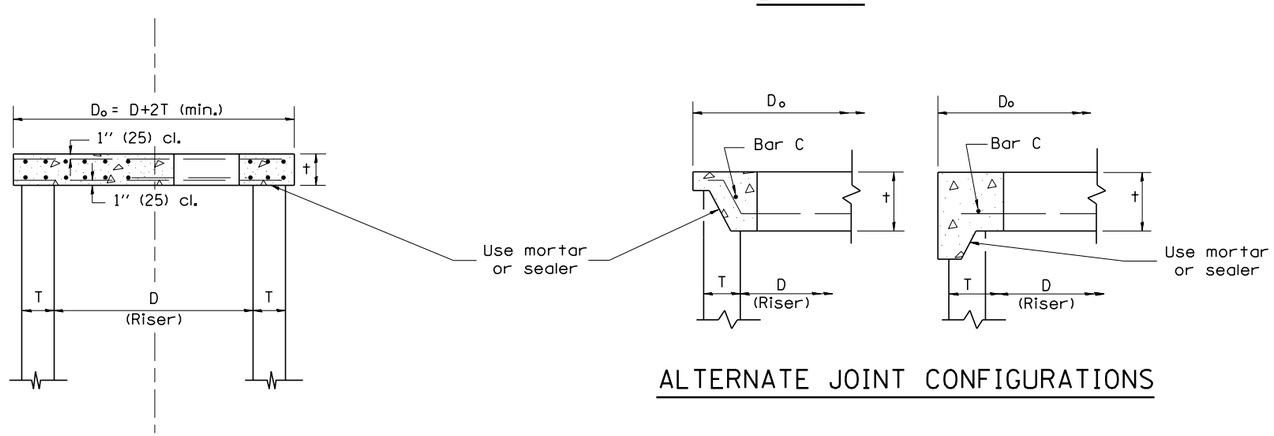

SECTION A-A

ALTERNATE JOINT CONFIGURATIONS

GENERAL NOTES

1. The precast reinforced concrete flat slab top shall be used with INLET-MANHOLE, TYPE G-1 and INLET-MANHOLE, TYPE G-1, SPECIAL.
2. Joint configuration and dimensions of flat slab top shall match and fit the riser joint detail.
3. Lifting devices shall be approved by the Engineer.

DESIGNER NOTES:

1. Include this standard with Type G-1 and Type G-1, Special Inlet-Manholes.
2. The flat slab top is included in the cost of INLET-MANHOLES as per District Special Provision.

All dimensions are in inches (millimeters) unless otherwise noted.

01-01-97	RENUM. B-4.07, NEW REVISION BOX	T.P.
10-16-06	REVISED TO 2007 SPEC.	M.A.

STATE OF ILLINOIS
DEPARTMENT OF TRANSPORTATION

PRECAST REINFORCED CONCRETE FLAT SLAB TOP FOR INLET-MANHOLE, TYPE G-1 AND TYPE G-1, SPECIAL

NOT TO SCALE

CADD STD. 602101-D4

F.A. RTE.	SECTION	COUNTY	TOTAL SHEETS	SHEET NO.
	90-[14R;(14HB-4,14,14HVB)BR]	TAZEWELL	2433	2113
		CONTRACT NO.		
FED. ROAD DIST. NO.	ILLINOIS	FED. AID PROJECT		