11-9-12 LETTING ITEM 01X

F.A.I. RTE.	SECTION	COUNTY	TOTAL SHEETS	SHEET NO.
*	90-[14R;(14HB-4,14,14HVB)BR]	TAZEWELL	**2433	1
	ILLINOIS	CONTRACT NO. 68620		

* 74 & 155

**2433+107-73=2467

D-94-088-06

STATE OF ILLINOIS
DEPARTMENT OF TRANSPORTATION
DIVISION OF HIGHWAYS
PROPOSED
HIGHWAY PLANS

FAI 74 / FAI 155 INTERCHANGE (I-74/I-55)
SECTION 90-[14R;(14HB-4,14,14HVB)BR]
TAZEWELL COUNTY
PROJECT ACIM-ACBRI-000S(907)
INTERCHANGE RECONSTRUCTION
PLEASANT HILL RD TO MORTON INTERCHANGE TO NORTH OF BIRCHWOOD RD
C-94-154-06

FOR INDEX OF SHEETS, SEE SHEET NO. 2
FOR LIST OF STANDARDS, SEE SHEET NOS. 3 & 4

PROJECT LOCATED NEAR THE VILLAGE OF MORTON

DESIGN DESIGNATION

FAI 74 (FREEWAY) WITH FAI 155 (FREEWAY)

TRAFFIC DATA

2011 ADT	2034 ADT
I-74 = 56,200 (W) VEH /42,100 (E) VEH	I-74 = 85,500 VEH
I-155 = 22,000 VEH	I-155 = 34,800 VEH
RAMPS = 8,900 VEH	RAMPS = 15,100 VEH

DESIGN SPEED

I-74 AND I-155 70 MPH

POSTED SPEED LIMIT

I-74 AND I-155 65 MPH

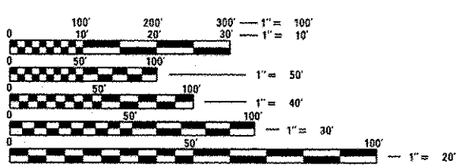

FULL SIZE PLANS HAVE BEEN PREPARED USING STANDARD ENGINEERING SCALES. REDUCED SIZED PLANS WILL NOT CONFORM TO STANDARD SCALES. IN MAKING MEASUREMENTS ON REDUCED PLANS, THE ABOVE SCALES MAY BE USED.

J.U.L.I.E.
JOINT UTILITY LOCATION INFORMATION FOR EXCAVATION
1-800-892-0123
OR 811

PROJECT MANAGER: CHRISTOPHER MAUSHARD (309) 671-3453
PROJECT LIAISON ENGINEER: MIKE MOHAMED (309) 671-3462

CONTRACT NO. 68620
CATALOG NO. 033344-01D

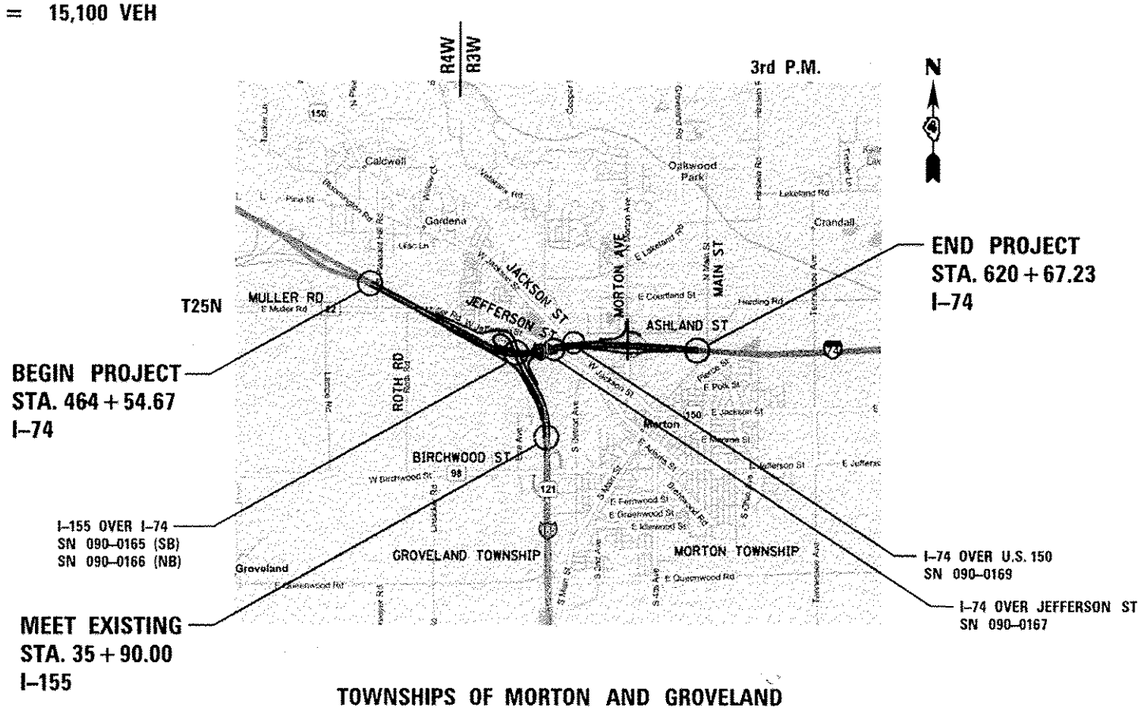

TOWNSHIPS OF MORTON AND GROVELAND
LOCATION MAP
NOT TO SCALE

GROSS LENGTH = 15,513.00 FT. = 2.94 MILE
NET LENGTH = 15,513.00 FT. = 2.94 MILE

LOCATION OF SECTION INDICATED THUS:-

STATE OF ILLINOIS
DEPARTMENT OF TRANSPORTATION
DIVISION OF HIGHWAYS

SUBMITTED July 27 20 12
DEPUTY DIRECTOR OF HIGHWAYS, REGION ENGINEER
August 17 20 12
John D. Baranzelli P.E. /a
acting ENGINEER OF DESIGN AND ENVIRONMENT
August 17 20 12
William R. Frenzel /a
acting DIRECTOR OF HIGHWAYS, CHIEF ENGINEER

PRINTED BY THE AUTHORITY OF THE STATE OF ILLINOIS

benesch
engineers · scientists · planners
Alfred Benesch & Company
205 North Michigan Avenue, Suite 2400
Chicago, Illinois 60601
312-565-0450
Job No. 10056

VOLUME I

1	COVER
2	INDEX OF SHEETS
3	DISTRICT 4 STANDARDS
4	HIGHWAY STANDARDS
5-6	GENERAL NOTES & PROJECT COMMITMENTS
7	STATUS OF UTILITIES TO BE ADJUSTED
8-41	SUMMARY OF QUANTITIES
42	EXISTING TYPICAL SECTIONS - I-74
43-44	EXISTING TYPICAL SECTIONS - I-155
45	EXISTING TYPICAL SECTIONS - I-74 & I-155 INTERCHANGE
46-49	EXISTING TYPICAL SECTIONS - MORTON AVE
50	EXISTING TYPICAL SECTIONS - JEFFERSON ST
51-54	PROPOSED TYPICAL SECTIONS - I-74
55-57	PROPOSED TYPICAL SECTIONS - I-155
58-59	PROPOSED TYPICAL SECTIONS - I-74 & I-155 INTERCHANGE
60-62	PROPOSED TYPICAL SECTIONS - MORTON AVE
63-68	PROPOSED TYPICAL SECTIONS - I-74 & MORTON AVE INTERCHANGE
69	PROPOSED TYPICAL SECTIONS - JEFFERSON ST
70	MAINTENANCE OF TRAFFIC - TYPICAL SECTION - TEMPORARY
70a-172	SCHEDULE OF QUANTITIES
173-188	ALIGNMENTS, TIES AND BENCHMARKS
189-207	REMOVAL PLANS
208-218	PLAN AND PROFILE - I-74
219-222	PLAN AND PROFILE - I-155
223-235	PLAN AND PROFILE - I-74 & I-155 INTERCHANGE RAMPS
236-239	PLAN - MORTON AVE
240-241	PROFILE - MORTON AVE
242-248	PLAN AND PROFILE - I-74 & MORTON AVE INTERCHANGE RAMPS
249-251	PLAN AND PROFILE - JEFFERSON ST
252	PLAN AND PROFILE - JACKSON ST
253-255	SUPERELEVATION TRANSITION DETAILS
256-259	PINECREST TEMPORARY TRAFFIC SIGNAL
260-273	MAINTENANCE OF TRAFFIC - GENERAL NOTES AND SIGN DETAILS
274-323	MAINTENANCE OF TRAFFIC - PRE-STAGE
323a - 323h	MAINTENANCE OF TRAFFIC - PRESTAGE CROSS SECTIONS
324-364	MAINTENANCE OF TRAFFIC - STAGE 1
365-371	MAINTENANCE OF TRAFFIC - STAGE 1 CROSS SECTIONS
372-374	MAINTENANCE OF TRAFFIC - TEMPORARY MORTON AVE RAMP F CROSS SECTIONS
375	MAINTENANCE OF TRAFFIC - STAGE 1 JEFFERSON DETOUR PLAN
376-490	MAINTENANCE OF TRAFFIC - STAGE 1 CROSS SECTIONS

VOLUME II

491-522	MAINTENANCE OF TRAFFIC - STAGE 2A
523-589a	MAINTENANCE OF TRAFFIC - STAGE 2A CROSS SECTIONS
590-606	MAINTENANCE OF TRAFFIC - STAGE 2B
606a-606k	MAINTENANCE OF TRAFFIC - STAGE 2B CROSS SECTIONS
607-632	MAINTENANCE OF TRAFFIC - STAGE 3A
633-688	MAINTENANCE OF TRAFFIC - STAGE 3A CROSS SECTIONS
689-719	OMITTED
720-728	MAINTENANCE OF TRAFFIC - STAGE 3B
729-734b	MAINTENANCE OF TRAFFIC - STAGE 3B CROSS SECTIONS
735-762	MAINTENANCE OF TRAFFIC - STAGE 4
763-769c	MAINTENANCE OF TRAFFIC - STAGE 4 CROSS SECTIONS
770-771	MAINTENANCE OF TRAFFIC - STAGE 4 RAMP E DETOUR PLAN
772-793b	MAINTENANCE OF TRAFFIC - STAGE 4 CROSS SECTIONS
794-812	MAINTENANCE OF TRAFFIC - WINTER SHUTDOWN 2013
813-839	MAINTENANCE OF TRAFFIC - STAGE 5
840-843s	MAINTENANCE OF TRAFFIC - STAGE 5 CROSS SECTIONS
844-861	MAINTENANCE OF TRAFFIC - STAGE 6
862-870v	MAINTENANCE OF TRAFFIC - STAGE 6 CROSS SECTIONS
871-881	MAINTENANCE OF TRAFFIC - STAGE 7A
882-898d	MAINTENANCE OF TRAFFIC - STAGE 7A CROSS SECTIONS
899-910	MAINTENANCE OF TRAFFIC - STAGE 7B
911-924d	MAINTENANCE OF TRAFFIC - STAGE 7B CROSS SECTIONS

VOLUME III

925-937	MAINTENANCE OF TRAFFIC - STAGE 8
938-949	MAINTENANCE OF TRAFFIC - STAGE 8 CROSS SECTIONS
950-964	MAINTENANCE OF TRAFFIC - STAGE 9
965-986	MAINTENANCE OF TRAFFIC - STAGE 9 CROSS SECTIONS
987-994	MAINTENANCE OF TRAFFIC - STAGE 10
995-1019	MAINTENANCE OF TRAFFIC - STAGE 10 CROSS SECTIONS
1020-1032	MAINTENANCE OF TRAFFIC - STAGE 11
1033-1060	MAINTENANCE OF TRAFFIC - STAGE 11 CROSS SECTIONS
1061-1070	OMITTED
1071-1083	MAINTENANCE OF TRAFFIC - STAGE 12
1084-1148	MAINTENANCE OF TRAFFIC - STAGE 12 CROSS SECTIONS
1149-1157	OMITTED
1158-1178	MAINTENANCE OF TRAFFIC - WINTER SHUTDOWN 2014
1179-1202	MAINTENANCE OF TRAFFIC - STAGE 13
1203-1250a	MAINTENANCE OF TRAFFIC - STAGE 13 CROSS SECTIONS
1251-1281	MAINTENANCE OF TRAFFIC - STAGE 14
1282-1308a	MAINTENANCE OF TRAFFIC - STAGE 14 CROSS SECTIONS

VOLUME IV

1309-1326	DRAINAGE STAGING PLANS
1327-1330	TEMPORARY STORM SEWER PLANS - I-74
1331-1378	TEMPORARY EROSION CONTROL PLANS
1379-1413	PERMANENT EROSION CONTROL PLANS
1414-1426	DRAINAGE AND UTILITY PLAN AND PROFILE - I-74
1427-1429	DRAINAGE AND UTILITY PLAN AND PROFILE - I-155
1430-1437	DRAINAGE AND UTILITY PLAN AND PROFILE - I-74 & I-155 INTERCHANGE
1438-1443	DRAINAGE AND UTILITY PLAN AND PROFILE - MORTON AVE
1444-1446	DRAINAGE AND UTILITY PLAN AND PROFILE - I-74 & MORTON AVE INTERCHANGE
1447-1449	DRAINAGE AND UTILITY PLAN AND PROFILE - JEFFERSON ST
1450-1456	GRADING PLANS
1457-1463	DRAINAGE DETAILS
1464-1471	ROW PLANS
1472-1473	WICK DRAIN BLANKETS
1474-1489	PAVEMENT AND JOINTING ELEVATION PLANS - I-74 & I-155 INTERCHANGE
1490-1501	INTERSECTION LAYOUT DETAILS - I-74 & MORTON AVE INTERCHANGE
1502-1504	CONCRETE BARRIER TRANSITION DETAIL
1505-1547	PAVEMENT MARKING PLANS
1548-1583	SIGNING PLANS
1584-1620	SIGN PANEL DETAIL SHEETS
1621-1652	SIGN STRUCTURE FOUNDATION PLANS

VOLUME V

1653-1664	TRAFFIC SIGNAL PLANS
1665-1715	ITS
1716-1830	LIGHTING PLANS
1831-1853	OMITTED
1854-1858	PINECREST OVER I-74 OVERLAY
1859-1860	I-74 OVER I-155 OVERLAY
1861-1862	I-74 OVER ABANDONED RR OVERLAY
1863-1864	I-74 OVER US 150 (JACKSON ST) OVERLAY
1865-1911	I-155 OVER I-74
1912-1976	I-74 OVER JEFFERSON ST
1977-2039	I-74 OVER US 150 (JACKSON ST)
2040-2068	MORTON AVE OVER I-74
2069-2090	STRUCTURE REMOVAL PLANS
2091-2094	MORTON RAMP D RETAINING WALL

VOLUME VI

2095-2141	IDOT DISTRICT 4 DETAILS
2142-2145	CROSS SECTION KEY PLANS
2146-2289	CROSS SECTIONS - I-74
2290-2312	CROSS SECTIONS - I-155
2313-2323	CROSS SECTIONS - I-74 & I-155 RAMP E
2324-2335	CROSS SECTIONS - I-74 & I-155 RAMP F
2336-2351	CROSS SECTIONS - I-74 & I-155 RAMP G
2352-2366	CROSS SECTIONS - I-74 & I-155 RAMP H
2367-2390	CROSS SECTIONS - MORTON AVE
2391-2395	CROSS SECTIONS - I-74 & MORTON AVE RAMP E
2396-2412	CROSS SECTIONS - I-74 & MORTON AVE RAMP F
2413-2420	CROSS SECTIONS - I-74 & MORTON AVE RAMP D
2421-2423	CROSS SECTIONS - I-74 & MORTON AVE RAMP B
2424-2433	CROSS SECTIONS - JEFFERSON ST

LICENSED PROFESSIONAL ENGINEER
WILLIAM L. SCHMANSKI
062-042542
STATE OF ILLINOIS

SIGNATURE:
DATE SIGNED: 7/31 20 12
LICENSE EXPIRATION DATE: 11-30-2013
ALFRED BENESCH & COMPANY
SHEETS 1309-1330, 1414-1463

LICENSED PROFESSIONAL ENGINEER
MARK R. BENDOK
081-006516
LICENSED STRUCTURAL ENGINEER
STATE OF ILLINOIS

SIGNATURE:
DATE SIGNED: 7/31 20 12
LICENSE EXPIRATION DATE: 11-30-2012
ALFRED BENESCH & COMPANY
SHEETS 1621-1652, 1859-2094

LICENSED PROFESSIONAL ENGINEER
GEOFFREY H. THIESSE
062-060445
STATE OF ILLINOIS

SIGNATURE:
DATE SIGNED: 7/31 20 12
LICENSE EXPIRATION DATE: 11-30-2013
ALFRED BENESCH & COMPANY
SHEETS 1716-1830

LICENSED PROFESSIONAL ENGINEER
LANCE D. CHRISMAN
062-056127
STATE OF ILLINOIS

SIGNATURE:
DATE SIGNED: 8/2 20 12
LICENSE EXPIRATION DATE: 11-30-2013
KASKASKIA, ENGINEERING GROUP, LLC
SHEETS 1331-1413, 1505-1620, 1653-1664

LICENSED PROFESSIONAL ENGINEER
JAMIL BOU-SAAB
062-047537
STATE OF ILLINOIS

SIGNATURE:
DATE SIGNED: 7/31 20 12
LICENSE EXPIRATION DATE: 11-30-2013
TERRA ENGINEERING, Ltd.
SHEETS 70, 189-207, 260-323, 324-364, 372-375, 491-522, 590-606, 607-632, 720-728, 735-762, 770-771, 794-839, 844-861, 871-881, 899-910, 925-937, 950-964, 987-994, 1020-1032, 1071-1083, 1158-1202, 1251-1281

LICENSED PROFESSIONAL ENGINEER
JOSELITO N. REAMBILLO
062-053250
STATE OF ILLINOIS

SIGNATURE:
DATE SIGNED: 7/31 20 12
LICENSE EXPIRATION DATE: 11-30-2013
ALFRED BENESCH & COMPANY
SHEETS 1-69, 70a-188, 208-255, 323a-323h, 365-371, 376-490, 523-589a, 606a-606k, 633-688, 729-734b, 763-769c, 772-793b, 840-843s, 862-870v, 882-898d, 911-924d, 938-949, 965-986, 995-1019, 1033-1060, 1084-1148, 1203-1250a, 1282-1308a, 1472-1504, 2142-2433

FILE NAME =	DESIGNED -	REVISED -	benesch engineers · scientists · planners
...\D468620-sht-index_withstamps.dgn	DRAWN -	REVISED -	STATE OF ILLINOIS DEPARTMENT OF TRANSPORTATION
USER NAME = rgrimm	CHECKED -	REVISED -	
PLOT DATE = 7/31/2012	DATE - JULY 20, 2012	REVISED -	

INDEX OF SHEETS

SCALE: | SHEET NO. OF SHEETS | STA. TO STA.

F.A.U. RTE.	SECTION	COUNTY	TOTAL SHEETS	SHEET NO.
*	30-(14R,(14HB-4,14,(4HVB)BR)	TAZEWELL	2433	2
		CONTRACT NO. 68620		
		ILLINOIS FED. AID PROJECT		

* 74 & 155

IDOT DISTRICT 4 STANDARDS

EARTHWORK AND EROSION CONTROL

205001-D4	SLOPE STEPS DETAIL
205101-D4	SETTLEMENT PLATFORM
280101-D4	EROSION CONTROL AGGREGATE DITCH CHECK
281001-D4	RIPRAP DITCH FOR EROSION PROTECTION

PAVEMENT, REHABILITATION AND SHOULDERS

406101-D4	BUTT JOINTS (3 SHEETS)
420401-D4	BRIDGE APPROACH DETAIL
440001-D4	HOT MIX ASPHALT SURFACE REMOVAL (COLD MILLING)

BRIDGES AND CULVERTS

503101-D4	SPECIAL DROP OUTLET DETAIL
505001-D4	BEARING PLATE DETAIL
542016-D4	PIPE CULVERT EXTENSION COLLAR (WITHOUT END SECTION)
542301-D4	PRECAST REINFORCED CONCRETE FLARED DROP BOX END SECTION

DRAINAGE

601301-D4	PIPE ELBOW
601701-D4	SLOTTED VANE DRAIN
602001-D4	INLETS, TYPE G-1
602021-D4	INLET - MANHOLE, TYPE G-1
602026-D4	INLET - MANHOLE, TYPE G-1, SPECIAL
602101-D4	PRECAST REINFORCED FLAT SLAB TOP FOR INLET-MANHOLE, TYPE G-1 AND TYPE G-1 SPECIAL
604001-D4	FRAMES AND GRATES FOR TYPE G-1 AND TYPE G-1 SPECIAL DRAINAGE STRUCTURES
604301-D4	TYPE 37 GRATE
606002-D4	SPECIAL DETAIL OF M-2.06 (M-5.15) AND M-2.12 (M-5.50) CURB
606101-D4	CONCRETE GUTTER, TYPE A, (SPECIAL) (INLET, OUTLET AND ENTRANCE) (3 SHTS)
609001-D4	CONCRETE THRUST BLOCKS
611001-D4	STORM SEWER PROTECTED

SAFETY

630011-D4	REMOVE AND REERECT STEEL PLATE BEAM GUARDRAIL (4 SHTS)
630101-D4	GUARDRAIL EROSION CONTROL TREATMENTS
635001-D4	DELINEATORS-SPECIAL
635101-D4	GUARDRAIL AND BARRIER WALL DELINEATION (3 SHTS)
650002-D4	MEDIAN SAND MODULE IMPACT ATTENUATOR 70 MPH DESIGN - 40' MEDIAN
650003-D4	MEDIAN SAND MODULE IMPACT ATTENUATOR 55 MPH DESIGN - 64' MEDIAN
650004-D4	MEDIAN SAND MODULE IMPACT ATTENUATOR 70 MPH DESIGN - 64' MEDIAN

FENCING, MARKERS AND MISCELLANEOUS

667101-D4	PERMANENT SURVEY TIE AND PERMANENT SURVEY MARKERS TYPE I & TYPE II

TRAFFIC CONTROL

701416-D4	LANE CLOSURE, MULTI-LANE DIVIDED, WITH CROSSOVER FOR SPEEDS >= 45MPH (STD 701416 SPECIAL)
701501-D4	LANE CLOSURE, 2L, 2W WITH 2W LEFT TURN LANE FOR SPEEDS < 45 MPH
701606-D4	URBAN LANE CLOSURE MULTILANE, 2-WAY WITH BIDIRECTIONAL LEFT TURN LANE FOR SPEEDS < 45 MPH
	NIGHTTIME LIGHTING INSPECTION
702001-D4	TEMPORARY BITUMINOUS MEDIAN

SIGNING

720001-D4	SIGNING SCHEDULE
720006-D4	GROUND MOUNT SIGN STRUCTURE DETAILS
720011-D4	TABULATION OF WOOD POST MOUNTED SIGNS

PAVEMENT MARKING

780001-D4	TYPICAL PAVEMENT MARKINGS (2 SHTS)

HIGHWAY STANDARDS

000001-06 STANDARD SYMBOLS, ABBREVIATIONS AND PATTERNS
001001-02 AREAS OF REINFORCEMENT BARS

200 EARTHWORK AND EROSION CONTROL

202001-01 EARTH MEDIAN DITCH CHECK
280001-06 TEMPORARY EROSION CONTROL SYSTEMS

400 PAVEMENT, REHABILITATION AND SHOULDERS

420001-07 PAVEMENT JOINTS
420101-04 24' (7.2M) JOINTED PCC PAVEMENT
420106-04 36' (10.8M) JOINTED PCC PAVEMENT
420111-03 PCC PAVEMENT ROUNDOUTS
420201-07 ENTRANCE RAMP TERMINAL
420206-08 ENTRANCE RAMP TERMINAL
420301-04 EXIT RAMP TERMINAL
420306-06 EXIT RAMP TERMINAL
420401-08 BRIDGE APPROACH PAVEMENT CONNECTOR
420601-05 24' (7.2M) PCC PAVEMENT
421001-02 BAR REINFORCEMENT FOR CRC PAVEMENT
421201-06 24' (7.2M) CRC PAVEMENT (WITH LUG SYSTEM)
421206-06 36' (10.8M) CRC PAVEMENT (WITH LUG SYSTEM)
442201-03 CLASS C AND D PATCHES
483001-04 PCC SHOULDER

500 BRIDGES AND CULVERTS

515001-03 NAME PLATE FOR BRIDGES
542116-02 REINFORCED CONCRETE END SECTIONS FOR MULTIPLE (2 & 3) PIPE CULVERTS, 15" (375MM) THRU 36" (900MM) AT RIGHT ANGLES WITH ROADWAY
542301-03 PRECAST REINFORCED CONCRETE FLARED END SECTION
542311-03 GRATING FOR CONCRETE FLARED END SECTION (FOR 24" (600MM) THRU 54" (1300MM) PIPE)
542401-01 METAL END SECTION FOR PIPE CULVERTS
542501-02 INLET BOX TYPE 24 (600) A

600 DRAINAGE

601001-04 SUB-SURFACE DRAIN
601101-01 CONCRETE HEAD WALL FOR PIPE DRAIN
602106-01 DRAINAGE STRUCTURES TYPE 4, 5, & 6
602301-03 INLET TYPE A
602401-03 MANHOLE, TYPE A
602406-05 MANHOLE, TYPE A, 6' (1.8M) DIAMETER
602601-02 PRECAST REINFORCED CONRETE FLAT SLAB TOP
602701-02 MANHOLE STEPS
604001-03 FRAME AND LIDS, TYPE 1
604036-02 GRATE, TYPE 8
604071-04 FRAME AND GRATE, TYPE 20
606006-02 CONCRETE CURB TYPE B AND COMBINATION CONCRETE CURB AND GUTTER
606301-04 PC CONCRETE ISLANDS AND MEDIANS
606306-03 CORRUGATED PC CONCRETE MEDIANS
610001-06 SHOULDER INLET WITH CURB

630 SAFETY

630001-10 STEEL PLATE BEAM GUARDRAIL
630301-05 SHOULDER WIDENING FOR TYPE 1 (SPECIAL) GUARDRAIL TERMINALS
631011-08 TRAFFIC BARRIER TERMINAL, TYPE 2
631026-05 TRAFFIC BARRIER TERMINAL, TYPE 5
631031-10 TRAFFIC BARRIER TERMINAL, TYPE 6
635001-01 DELINEATORS
637006-02 CONCRETE BARRIER, DOUBLE FACE, 42 IN. (1065 MIN) HEIGHT
642001-02 SHOULDER RUMBLE STRIPS, 16 IN.
643001 SAND MODULE IMPACT ATTENUATORS

660 FENCING, MARKERS AND MISCELLANEOUS

664001-02 CHAIN LINK FENCE
666001-01 RIGHT-OF-WAY MARKERS

700 TRAFFIC CONTROL

701006-03 OFF-ROAD OPERATIONS, 2L, 2W, 15' TO 24" FROM PAVEMENT EDGE
701101-02 OFF-ROAD OPERATIONS, MULTILANE, 15" TO 24" FROM EDGE OF PAVEMENT
701106-02 OFF-ROAD OPERATIONS, MULTILANE, MORE THAN 15' AWAY
701011-02 OFF-ROAD MOVING OPERATIONS, 2L, 2W, DAY ONLY
701201-04 LANE CLOSURE, 2L, 2W, DAY ONLY, FOR SPEEDS >/= 45 mph
701301-04 LANE CLOSURE, 2L, 2W, SHORT TIME OPERATIONS
701306-03 LANE CLOSURE, 2L, 2W, SLOW MOVING OPERATIONS DAY ONLY, FOR SPEEDS >/= 45 MPH
701311-03 LANE CLOSURE, 2L, 2W, MOVING OPERATIONS--DAY ONLY
701326-04 LANE CLOSURE, 2L, 2W, PAVEMENT WIDENING, FOR SPEEDS >/= 45 MPH
701400-05 APPROACH TO LANE CLOSURE, FREEWAY/EXPRESSWAY
701401-06 LANE CLOSURE, FREEWAY/EXPRESSWAY
701402-09 LANE CLOSURE, FREEWAY/EXPRESSWAY, WITH BARRIER
701406-06 LANE CLOSURE, FREEWAY/EXPRESSWAY, DAY OPERATIONS ONLY
701411-08 LANE CLOSURE, MULTILANE, AT ENTRANCE OR EXIT RAMP, FOR SPEEDS >/= 45 MPH
701416-07 LANE CLOSURE, FREEWAY/EXPRESSWAY, WITH CROSSOVER AND BARRIER
701421-04 LANE CLOSURE, MULTILANE, DAY OPERATIONS ONLY, FOR SPEEDS >/= 45 MPH TO 55 MPH
701422-04 LANE CLOSURE, MULTILANE, FOR SPEEDS >/= 45 MPH TO 55 MPH
701423-05 LANE CLOSURE, MULTILANE, WITH BARRIER, FOR SPEEDS >/= 45 MPH TO 55 MPH
701426-04 LANE CLOSURE, MULTILANE, INTERMITTANT OR MOVING OPERATIONS, FOR SPEEDS >/= 45 MPH
701451-01 RAMP CLOSURE, FREEWAY/EXPRESSWAY
701456-02 PARTIAL EXIT RAMP CLOSURE, FREEWAY/EXPRESSWAY
701601-07 URBAN LANE CLOSURE, MULTILANE, 1W OR 2W WITH NONTRAVERSABLE MEDIAN
701602-05 URBAN LANE CLOSURE, MULTILANE, 2W WITH BIDIRECTIONAL LEFT TURN LANE
701701-08 URBAN LANE CLOSURE, MULTILANE INTERSECTION
701901-02 TRAFFIC CONTROL DEVICES
704001-07 TEMPORARY CONCRETE BARRIER

720 SIGNING

720001-01 SIGN PANEL MOUNTING DETAILS
720006-03 SIGN PANEL ERECTION DETAILS
720016-03 MAST ARM MOUNTED STREET NAME SIGNS
720021-02 SIGN PANELS EXTRUDED ALUMINUM TYPE
~~729001-01 APPLICATIONS OF TYPES A AND B METAL POSTS (FOR SIGNS AND MARKERS)~~
729001-01 APPLICATIONS OF TYPES A AND B METAL POSTS (FOR SIGNS AND MARKERS)

780 PAVEMENT MARKING

780001-03 TYPICAL PAVEMENT MARKINGS
781001-03 TYPICAL APPLICATIONS RAISED REFLECTIVE PAVEMENT MARKERS

800 ELECTRICAL

805001-01 ELECTRICAL SERVICE INSTALLATION DETAILS
814001-02 HANDHOLES
814006-02 DOUBLE HANDHOLES
825026-02 LIGHTING CONTROLLER BASE MOUNTED, 480V
830016 LIGHT POLE STEEL DAVIT ARM
836001-01 LIGHT POLE FOUNDATION
857001-01 STANDARD PHASE DESIGNATION DIAGRAMS AND PHASE SEQUENCES
873001-02 TRAFFIC SIGNAL GROUNDING AND BONDING
877011-05 STEEL COMBINATION MAST ARM ASSEMBLY AND POLE 16' THORUGH 55'
877012-02 STEEL COMBINATION MAST ARM ASSEMBLY AND POLE 56' THORUGH 75'
878001-09 CONCRETE FOUNDATION DETAILS
880001-01 SPAN WIRE MOUNTED SIGNALS AND FLASHING BEACON INSTALLATION
880006-01 TRAFFIC SIGNAL MOUNTING DETAILS
886001-01 DETECTOR LOOP INSTALLATIONS
886006-01 TYPICAL LAYOUTS FOR DETECTION LOOPS
830011 LIGHT POLE STEEL MAST ARM

GENERAL NOTES

SOIL REPORT AVAILABILITY
ALL SOILS DATA COLLECTED AND PROCESSED FOR THE SOILS REPORT MADE IN CONJUNCTION WITH THE DESIGN OF THIS IMPROVEMENT IS ON FILE AT THE DISTRICT OFFICE WHERE IT IS AVAILABLE FOR INSPECTION BY CONTRACTORS OR PROSPECTIVE BIDDERS. BY SUBMITTING A BID, THE CONTRACTOR ACKNOWLEDGES THAT THE SOILS REPORT HAS BEEN MADE AVAILABLE AND IS AWARE OF THE REPORT CONTENTS AND APPENDICES.

AVAILABILITY OF ELECTRONIC FILES
MICROSTATION AND GEOPAK FILES OF THIS PROJECT WILL BE MADE AVAILABLE TO THE CONTRACTOR. IF THERE IS A CONFLICT BETWEEN THE ELECTRONIC FILES AND THE PRINTED CONTRACT PLANS AND DOCUMENTS, THE PRINTED CONTRACT PLANS AND DOCUMENTS SHALL TAKE PRECEDENCE OVER THE ELECTRONIC FILES. THE CONTRACTOR SHALL ACCEPT ALL RISK ASSOCIATED WITH USING THE ELECTRONIC FILES AND SHALL HOLD THE DEPARTMENT HARMLESS FOR ANY ERRORS OR OMISSIONS IN THE ELECTRONIC FILES AND THE DATA CONTAINED THEREIN. ERRORS OR DELAYS RESULTING FROM THE USE OF THE ELECTRONIC FILES BY THE CONTRACTOR SHALL NOT RESULT IN AN EXTENSION OF TIME FOR ANY INTERIM OR FINAL COMPLETION DATE OR SHALL NOT BE CONSIDERED CAUSE FOR ADDITIONAL COMPENSATION. THE CONTRACTOR SHALL NOT USE, SHARE, OR DISTRIBUTE THESE ELECTRONIC FILES EXCEPT FOR THE PURPOSE OF CONSTRUCTING THIS CONTRACT. ANY CLAIMS BY THIRD PARTIES DUE TO USE OR ERRORS SHALL BE THE SOLE RESPONSIBILITY OF THE CONTRACTOR. THE CONTRACTOR SHALL INCLUDE THIS DISCLAIMER WITH THE TRANSFER OF THESE ELECTRONIC FILES TO ANY OTHER PARTIES AND SHALL INCLUDE APPROPRIATE LANGUAGE BINDING THEM TO SIMILAR RESPONSIBILITIES.

UTILITIES - LOCATIONS/INFORMATION ON PLANS
THE LOCATIONS OF EXISTING WATER MAINS, GAS MAINS, SEWERS, ELECTRIC POWER LINES, TELEPHONE LINES AND OTHER UTILITIES AS SHOWN ON THE PLANS ARE BASED ON CAREFUL FIELD INVESTIGATION AND THE BEST INFORMATION AVAILABLE, BUT THEY ARE NOT GUARANTEED. UNLESS ELEVATIONS ARE SHOWN --- ALL UTILITY LOCATIONS SHOWN ON THE CROSS SECTIONS ARE BASED ON THE APPROXIMATE DEPTH SUPPLIED BY THE UTILITY COMPANY. IT SHALL BE THE CONTRACTOR'S RESPONSIBILITY TO ASCERTAIN THEIR EXACT LOCATION FROM THE UTILITY COMPANIES AND BY FIELD INSPECTION.

TREE REMOVAL - UTILITY RELOCATION
TREE REMOVAL MAY BE NECESSARY PRIOR TO UTILITY COMPANIES BEING ABLE TO RELOCATE THEIR FACILITIES OUTSIDE THE CONSTRUCTION LIMITS. THE CONTRACTOR SHOULD COORDINATE ANY CONTRACT TREE REMOVAL ACTIVITIES WITH THE UTILITY COMPANIES TO ELIMINATE CONFLICTS AND POTENTIAL DELAYS CAUSED BY UTILITY TREE REMOVAL ACTIVITIES OR INCOMPLETE UTILITY RELOCATIONS.

PLAN ELEVATIONS - U.S.G.S. MEAN SEA LEVEL DATUM
ALL ELEVATIONS SHOWN REFER TO U.S.G.S. DATUM AT MEAN SEA LEVEL UNLESS OTHERWISE NOTED.

PROPERTY OWNER ACCESS REQUIREMENT
ACCESS MUST BE MAINTAINED TO ALL EXISTING PROPERTIES DURING CONSTRUCTION PER ARTICLE 107.09 UNLESS ARRANGEMENTS ARE MADE IN WRITING BY THE CONTRACTOR WITH THE PROPERTY OWNERS WITH A COPY TO THE ENGINEER FOR SHORT-TERM CLOSURES.

CONSECUTIVE SIDE STREET (ROAD) CLOSURE - PROHIBITED
1. NO TWO CONSECUTIVE SIDE STREETS (ROADS) MAY BE CLOSED AT THE SAME TIME DURING CONSTRUCTION. THE CONTRACTOR MUST ALTERNATE STREETS (ROADS).
2. ADJACENT SIDE ROADS WILL NOT BE CLOSED SIMULTANEOUSLY. BLR STANDARD 21 SHALL BE USED FOR ALL LOCAL ROAD CLOSURES WITHOUT ANY ENTRANCES WITHIN THE CLOSED AREA. BLR STANDARD 22 CAN BE USED WHERE IT IS NECESSARY TO ALLOW LOCAL TRAFFIC ACCESS.

CLEARING
AT LOCATIONS WHERE CLEARING IS INDICATED ON THE PLANS BEYOND THE LIMITS OF THE PROPOSED EXCAVATION OR EMBANKMENT, THE CONTRACTOR SHALL RESTORE THE DISTURBED EARTH BY BLADING AND SHAPING TO BLEND WITH THE ADJACENT GROUND. THE CLEARING WILL NOT BE PAID FOR SEPARATELY BUT SHALL BE INCLUDED IN THE COST OF THE EXCAVATION PAY ITEMS IN THE PLANS. PAYMENT FOR RESEEDING OR RESODDING WILL BE AS PROVIDED IN THE PLANS.

TREE REMOVAL
THE DISTRICT FOUR TREE COMMITTEE SHOULD BE CONTACTED AND PRIOR APPROVAL OBTAINED FOR ANY TREE REMOVAL BEYOND THE LIMITS/LOCATIONS INCLUDED IN THE PLANS.

EARTH EXCAVATION - INCIDENTAL TO CURB, GUTTER & DRIVEWAY
EARTH EXCAVATION AND BACKFILL FOR PROPOSED CURB AND GUTTERS AND DRIVEWAY PAVEMENTS SHALL BE INCLUDED IN THE UNIT COST OF THE VARIOUS ITEMS.

ENVIRONMENTAL REVIEWS
PRIOR TO THE USE OF ANY PROPOSED BORROW AREAS, USE AREAS (TEMPORARY ACCESS ROADS, DETOURS, RUN-AROUNDS, ETC.) AND/OR WASTE AREAS, THE CONTRACTOR SHALL FILE THE REQUIRED ENVIRONMENTAL RESOURCE REQUEST SURVEYS ACCORDING TO SECTION 107.22 OF THE STANDARD SPECIFICATIONS. THESE SURVEYS ARE REQUIRED IN ORDER FOR THE DEPARTMENT TO CONDUCT CULTURAL AND BIOLOGICAL RESOURCE SURVEYS FOR THE PROPOSED SITE.

PRIOR TO ANY WASTE MATERIALS BEING REMOVED FROM THE CONSTRUCTION SITE THE REQUIRED ENVIRONMENTAL RESOURCE SURVEYS WILL NEED TO BE OBTAINED AND FILED BY THE CONTRACTOR. EXCESS WASTE PRODUCTS REMOVED FROM THE CONSTRUCTION SITE SHALL BE DISPOSED OF AS REQUIRED IN SECTION 202.03 OF THE STANDARD SPECIFICATIONS.

ANY PROTRUDING METAL BARS SHALL BE REMOVED PRIOR TO THE DISPOSAL OF BROKEN CONCRETE AT APPROVED DISPOSAL SITES.

THE REQUIRED ENVIRONMENTAL RESOURCE DOCUMENTATION SHALL INCLUDE THE FOLLOWING:

BDE FORM 2289 (ENVIRONMENTAL SURVEY REQUEST)
A LOCATION MAP SHOWING THE SIZE LIMITS AND LOCATION OF THE USE AREA
SIGNED PROPERTY OWNER AGREEMENT FORM - D4 P10100
COLOR PHOTOGRAPHS DEPICTING THE USE AREA
BORROW AREA ENTRY AGREEMENT FORM - D4 P10101

SEEDING - SIDESLOPE RIPPING
ALL SLOPES STEEPER THAN 3 TO 1 AND OVER 15 FT. (4.5 M) IN HEIGHT SHALL BE RIPPED. THIS SHALL CONSIST OF RIPPING BETWEEN 18 INCHES TO 24 INCHES (450 MM TO 600 MM) DEEP NORMAL TO THE SLOPE. THE INTERVAL OF RIPPING ALONG THE SLOPE SHALL BE 12 FT. (3.6 M). THIS WORK SHALL BE DONE AFTER THE SEED BED HAS BEEN PREPARED BUT BEFORE ANY FERTILIZER OR SEED HAS BEEN APPLIED. THE FERTILIZER AND SEED SHALL BE APPLIED WITHIN A 24-HOUR PERIOD AFTER THE RIPPING HAS BEEN DONE. THIS WORK WILL NOT BE PAID FOR SEPARATELY BUT WILL BE INCLUDED IN THE COST OF THE VARIOUS ITEMS OF SEEDING INVOLVED.

PAVEMENT STATION NUMBERS & PLACEMENT
THE CONTRACTOR SHALL PROVIDE LABOR AND MATERIALS REQUIRED TO IMPRINT PAVEMENT STATION NUMBERS IN THE FINISHED SURFACE OF THE PAVEMENT AND/OR OVERLAY. THE NUMBERS SHALL BE APPROXIMATELY 3/4 INCH (20 MM) WIDE, 5 INCHES (125 MM) HIGH AND 5/8 INCH (15 MM) DEEP.

THE PAVEMENT STATION NUMBERS SHALL BE INSTALLED AS SPECIFIED HEREIN: INTERVAL - 200 FEET (ENGLISH STATIONING) OR 100 METERS (METRIC STATIONING) BOTTOM OF NUMBERS - 6 INCHES (150 MM) FROM THE INSIDE EDGE OF THE PAVEMENT MARKING LOCATION:

2, 3, & 5 LANE PAVEMENTS - RIGHT EDGE OF PAVEMENT IN DIRECTION OF INCREASING STATIONS;

MULTI-LANE DIVIDED ROADWAYS - OUTSIDE EDGE OF PAVEMENT IN BOTH DIRECTIONS; AND

RAMPS - ALONG BASELINE EDGE OF PAVEMENT POSITION - STATIONS SHALL BE PLACED SO THEY CAN BE READ FROM THE ADJACENT SHOULDER FORMAT - ENGLISH (METRIC) PAVEMENT STATIONS SHALL USE THIS FORMAT "XXX (XX+XOO)", WHERE X REPRESENTS THE PAVEMENT STATION THIS WORK WILL NOT BE PAID FOR SEPARATELY, BUT WILL BE INCLUDED IN THE COST OF THE ASSOCIATED PAVEMENT AND/OR OVERLAY PAY ITEMS.

POLYMERIZED BITUMINOUS MATERIALS (PRIME COAT) RATES

SURFACE TYPE	ESTIMATED TRUCK APPLICATION RATE	RESIDUAL RATE
MILLED (HMA OR PCC)	0.08 GAL/SY (0.00034 TON/SY)	0.04 GAL/SY
EXISTING PAVEMENT	0.05 GAL/SY (0.00022 TON/SY)	0.025 GAL/SY
FOG COAT (BETWEEN LIFTS)	0.05 GAL/SY (0.00022 TON/SY)	0.025 GAL/SY

NOTE: ESTIMATED TRUCK APPLICATION RATE IS USED FOR ESTIMATING QUANTITIES.

HOT-MIX ASPHALT MIXTURE REQUIREMENTS

MIX USE:	PINECREST DR. BRIDGE DECK OVERLAY 1¼"	BRIDGE DECK OVERLAY 1½"	JEFFERSON ST. POLYMER SURFACE COURSE	JEFFERSON ST. HMA BINDER COURSE
RAP %:	10% MAX.	10% MAX.	10%	25%
AC/PG:	SBS OR SBR 76-22	SBS OR SBR 76-22	SBS OR SBR 70-22	64-22
DESIGN AIR VOIDS:	4.0% @ N=50	4.0% @ N=50	4.0% @ N=50	4.0% @ N=50
MIXTURE COMPOSITION:	IL 9.5 OR IL 12.5	IL 9.5 OR IL 12.5	IL 9.5 OR 12.5	IL 19.0
FRICTION AGGREGATE:	MIX E	MIX E	MIX E	N.A.

MIX USE:	STABILIZED SUBBASE	CLASS D PATCHES	PARTIAL DEPTH PATCHES
RAP %:	Per Art. 1030	25% MAX	25% MAX
AC/PG:		64-22	64-22
DESIGN AIR VOIDS:		4.0% @ N=50	4.0% @ N=50
MIXTURE COMPOSITION:		IL 9.5 OR 12.5	IL 9.5 OR 12.5
FRICTION AGGREGATE:		N.A.	N.A.

PRIME COAT CONVERSION FACTORS **		
SURFACE TYPE	BIT PR COAT (GAL/SQ YD)	AGG PR COAT (LB/SQ YD)
COLD MILLED SURFACES	0.1	4
EXISTING PAVEMENT	0.05	4
NEW HMA COURSES	0.03	2

** PINECREST ONLY

BITUMINOUS & AGGREGATE CONVERSION FACTORS

BITUMINOUS SURFACE COURSE	112 lb/sy/in
ALL OTHER BITUMINOUS	112 lb/sy/in
AGGREGATE SHOULDERS	2.05 ton/cy

BUTT JOINT CUTTING TIME RESTRICTION
BUTT JOINTS SHALL NOT BE MILLED MORE THAN THREE (3) DAYS PRIOR TO PLACEMENT OF THE HMA SURFACE COURSE.

PAVING SURFACE COURSE
CONTINUOUS PAVING OPERATIONS ON THE MAIN ROADWAY SHALL BE MAINTAINED AT ALL TIMES DURING THE CONSTRUCTION OF THE HOT-MIX ASPHALT SURFACE. NO INTERRUPTIONS FOR SIDE ROADS, ENTRANCES, TURN LANES, ETC. WILL BE ALLOWED.

SAW CUT - 18" (450 MM) SHOULDER REMOVAL - IN-PLACE WHEEL SAW GRINDING PERMITTED
A FULL DEPTH SAW CUT SHALL BE REQUIRED AT THE JOINT BETWEEN THE PAVEMENT THAT IS TO BE LEFT IN PLACE AND THE EXISTING SHOULDER THAT IS TO BE REMOVED. THE CONTRACTOR MAY HAVE THE OPTION OF USING A WHEEL SAW TO GRIND UP THE EXISTING SHOULDER AND LEAVE THE FINELY GROUND PIECES ON SITE UNDER THE NEW SHOULDER AND ON THE FORESLOPE, WITH THE APPROVAL OF THE ENGINEER. MAXIMUM SIZE OF PIECES SHALL BE NO MORE THAN 3" (75 MM). LARGER PIECES SHALL BE PICKED UP/REMOVED FROM THE JOBSITE. NO ADDITIONAL COMPENSATION WILL BE ALLOWED FOR VARIATIONS IN ASSUMED THICKNESS. THIS WORK SHALL NOT BE PAID FOR SEPARATELY, BUT SHALL BE INCLUDED IN THE COST OF THE REMOVAL ITEMS.

ORDERING LENGTH CONFIRMATION - DRAINAGE ITEMS
THE CONTRACTOR SHALL CONSULT WITH THE ENGINEER IN REGARD TO THE EXACT LENGTH OF THE BOX/PIPE CULVERTS, STORM SEWERS, AND/OR PIPE DRAINS REQUIRED PRIOR TO ORDERING THESE ITEMS.

EXISTING DRAINAGE PIPES CONNECTED TO NEW STRUCTURES
IN ACCORDANCE WITH SECTION 602 OF THE STANDARD SPECIFICATIONS, THE CONNECTING OF EXISTING DRAIN TILES, PIPE CULVERTS, OR STORM SEWERS TO THE PROPOSED DRAINAGE SYSTEM STRUCTURES WILL NOT BE PAID FOR SEPARATELY BUT SHALL BE CONSIDERED AS INCLUDED IN THE PAY ITEMS PROVIDED.

TAPER REMOVAL AT FRAME & GRATES ADJUSTED BY OTHERS
AT LOCATIONS WHERE FRAMES AND GRATES HAVE PREVIOUSLY BEEN ADJUSTED BY OTHERS AND THEY ARE SURROUNDED BY HOT-MIX ASPHALT TAPERS, THE CONTRACTOR FOR THIS CONTRACT SHALL REMOVE AND DISPOSE OF THE HOT-MIX ASPHALT TAPER MATERIAL PRIOR TO THE PLACEMENT OF THE HOT-MIX ASPHALT SURFACE COURSE. THIS WORK WILL NOT BE PAID FOR SEPARATELY, BUT WILL BE CONSIDERED AS INCLUDED IN THE COST OF THE HOT-MIX ASPHALT SURFACE COURSE PAY ITEM.

MEDIAN AND ISLAND NOSES
WHEN CONSTRUCTING MEDIAN AND ISLAND NOSES THE FOLLOWING CRITERIA SHOULD BE FOLLOWED:
BARRIER CURB SHALL BE USED TO CONSTRUCT NOSES WHEN THE MEDIAN OR ISLAND SURROUNDS A MAST ARM OR OTHER NON-BREAKAWAY FOUNDATION.
RAMPED NOSES SHALL BE USED ON MEDIANS OR ISLANDS WITH BREAKAWAY POSTS.

SIGN POST HOLES
VERTICAL HOLES SHALL BE CONSTRUCTED IN THE ISLAND PAVEMENT AND/OR CONCRETE MEDIAN OF THE TYPE SPECIFIED OR CONCRETE MEDIAN SURFACE 4 INCHES (100 MM). THE HOLES SHALL BY 24 INCHES (600 MM) IN DIAMETER OR 24 INCHES (600 MM) SQUARE AND THEY SHALL BE FREE OF ANY OBSTRUCTION, EXCEPT EARTH, FOR A DEPTH OF 5 FEET (1.5 M) AT THE LOCATIONS SHOWN ON THE PLANS OR AS DIRECTED BY THE ENGINEER. ANY HOLES NOT USED FOR THE PLACEMENT OF SIGNS SHALL BE FILLED AND COMPACTED FLUSH WITH THE TOP OF THE ISLAND PAVEMENT, CONCRETE MEDIAN OF THE TYPES SPECIFIED, OR CONCRETE MEDIAN SURFACE 4 INCHES (100 MM). THE TOP 3 INCHES (75 MM) OF SAID COMPACTED FILL SHALL CONSIST OF A HOT-MIX ASPHALT MIXTURE. ALL HOLES IN WHICH THE SIGN POSTS ARE INSTALLED AT THE TIME OF THIS CONTRACT SHALL BE SIMILARLY FILLED. THIS WORK, INCLUDING ANY REQUIRED PAVEMENT REMOVAL NECESSARY TO CONSTRUCT THE SIGN POST HOLES, WILL NOT BE PAID FOR SEPARATELY BUT SHALL BE INCLUDED IN THE CONTRACT UNIT PRICE PER SQUARE FOOT (SQUARE METER) FOR ISLAND PAVEMENT AND/OR CONCRETE MEDIAN OF THE TYPE SPECIFIED, OR CONCRETE MEDIAN SURFACE, 4 INCHES (100 MM).

TRANSITION PAYMENT METHOD - NEW/OLD CONSTRUCTION
TEN FEET (10 FT.) (3 M) TRANSITIONS SHALL BE USED TO MATCH PROPOSED ITEMS OF WORK TO EXISTING ITEMS IN THE FIELD UNLESS OTHERWISE SHOWN. THE TRANSITION SHALL BE PAID FOR AT THE CONTRACT UNIT PRICE FOR THE PROPOSED ITEM OF WORK SPECIFIED.

WOVEN WIRE FENCE REPLACEMENT COMMITMENT
THE WOVEN WIRE FENCE SHALL BE INSTALLED PRIOR TO THE REMOVAL OF THE EXISTING FARM FENCES. THE CONTRACTOR SHALL PROVIDE A PULL POST AT THE INTERSECTION OF NEW AND EXISTING FENCES. WHEN SO DIRECTED BY THE ENGINEER, THE CONTRACTOR SHALL INSTALL THE WOVEN WIRE FENCE PRIOR TO COMMENCING ANY OTHER WORK IN THE AREA. THE CONTRACTOR SHALL PERFORM ANY CLEARING AND MINOR GRADING AS DIRECTED BY THE ENGINEER TO PROVIDE A SMOOTH GROUND SURFACE FOR THE PROPOSED FENCE.

RIGHT-OF-WAY MARKERS
WHEN INSTALLING RIGHT-OF-WAY MAKERS, CARE SHALL BE TAKEN TO NOT DISTURB ANY EXISTING PROPERTY/RIGHT-OF-WAY PINS. IF A PROPERTY/RIGHT-OF-WAY PIN IS FOUND AT THE LOCATION OF A PROPOSED RIGHT-OF-WAY MARKER, THE MARKER SHALL BE PLACED ONE (1) FOOT IN FRONT OF THE PIN.

GENERAL NOTES, (CONTINUED)

SETTING OF SECTION CORNER MONUMENTATION
ALL SECTION CORNER LOCATION ON THIS PROJECT SHALL BE LOCATED AND VERIFIED BY A LICENSED LAND SURVEYOR PRIOR TO ANY REMOVAL WORK BEING PERFORMED. THE LAND SURVEYOR SHALL LOCATE THE EXISTING SECTION CORNERS THROUGH COURTHOUSE RESEARCH, PERSONAL KNOWLEDGE OR THROUGH THE ASSISTANCE OF LOCAL FIRMS PERFORMING LAND SURVEYING IN THE AREA. IF THE SECTION CORNER DOES NOT EXIST THROUGH EITHER ITS PHYSICAL LOCATION OR THROUGH TIES IN THE FIELD IT SHALL NOT BE RESET, THERE SHALL BE NO CALCULATING OF SECTION CORNERS ONTO A PROJECT REQUIRED.

ONCE THE PAVING AND STRIPING OPERATIONS HAVE BEEN PERFORMED THE SECTION CORNER SHALL BE RESET AT THE DIRECTION OF A LICENSED LAND SURVEYOR. IF ANY DIMENSIONS HAVE BEEN CHANGED, IT SHALL BE THE RESPONSIBILITY OF THE SURVEYOR TO FILE A NEW MONUMENT RECORD IN THE APPROPRIATE COURTHOUSE.

A COPY OF ALL DRAWINGS OR MONUMENT RECORDS PRODUCED FROM THIS PROJECT SHALL BE SENT TO THE CHIEF OF SURVEYS, ILLINOIS DEPARTMENT OF TRANSPORTATION, REGION THREE/DISTRICT FOUR, PEORIA, ILLINOIS.

THE SUPPLYING, DRILLING, SETTING OF DISKS, PROFESSIONAL SERVICES, LABOR AND ANY OTHER ADDITIONAL WORK REQUIRED TO PERFORM THIS WORK SHALL BE PAID FOR UNDER PAY ITEM FOR PERMANENT SURVEY MARKERS, TYPE 1.

ENGINEERS FIELD OFFICE
ADD THE FOLLOWING SENTENCE TO THE END OF PARAGRAPH 670.02 (I) AND 670.04 (E):
ALL OF THE TELEPHONE LINES PROVIDED SHALL HAVE UNPUBLISHED NUMBERS.

SIGNING
SIGN LOCATIONS MAY VARY FROM THE STATIONS SHOWN ON THE PLANS IN ACCORDANCE WITH DIRECTIONS FROM THE ENGINEER AT THE TIME OF CONSTRUCTION. SIGN LOCATIONS MAY BE ADJUSTED IN THE FIELD TO AVOID ANY FOUND UTILITIES.
ALL WOOD POST LOCATIONS SHALL BE VERIFIED WITH THE BUREAU OF OPERATIONS, TRAFFIC SECTION, BEFORE INSTALLATION.

TRAFFIC COUNTER LOOP DETECTOR INSTALLATION
THE RESIDENT ENGINEER AND/OR CONTRACTOR SHALL NOTIFY THE TRAFFIC STUDIES TECHNICIAN IN PROGRAM DEVELOPMENT AT LEAST ONE WEEK PRIOR TO THE INSTALLATION TO DETERMINE EXACT LOCATION.

PROJECT SPECIFIC GENERAL NOTES

1. IF ANY SECTION OR SUB-SECTION MONUMENTS ARE ENCOUNTERED, THE ENGINEER SHALL BE NOTIFIED BEFORE SUCH MONUMENTS ARE REMOVED OR RESURFACED OVER. THE CONTRACTOR SHALL PROTECT AND CAREFULLY PRESERVE ALL PROPERTY MARKERS AND MONUMENTS UNTIL THE OWNER, AN AUTHORIZED SURVEYOR, OR AGENT HAS WITNESSED OR OTHERWISE REFERENCED THEIR LOCATION.

2. ALL AREAS DISTURBED FOR ANY REASON SHALL BE SEEDED WITH CLASS 1, 2, OR 3 SEEDING AS DIRECTED BY THE ENGINEER. NUTRIENTS SHALL CONFORM TO ARTICLE 250.04.

3. MULCH, UNLESS OTHERWISE PERMITTED BY THE ENGINEER, SHALL CONFORM TO METHOD 2, PROCEDURE 2 AS SPECIFIED IN ARTICLE 251.03.

4. THE CONTRACTOR SHALL BE REQUIRED TO COMPLY WITH STATE REGULATIONS REGARDING AIR, WATER AND NOISE POLLUTION.

5. THE CONTRACTOR WILL SUBMIT TO THE ENGINEER A SATISFACTORY PROGRESS SCHEDULE AND CRITICAL PATH SCHEDULE WHICH SHALL SHOW THE PROPOSED SEQUENCE OF WORK AT THE TIME OF THE PRE-CONSTRUCTION CONFERENCE, PER THE REQUIREMENTS OF THE SPECIAL PROVISIONS TITLED "PROGRESS SCHEDULE".

PROJECT COMMITMENTS

1. COMMITMENT TO THE MORTON PARK DISTRICT TO MAINTAIN ACCESS FOR PEDESTRIANS AND BICYCLISTS TO THE MULTI-USE PATH ON JACKSON STREET BENEATH I-74 DURING THE HOURS OF 5:30 AM TO 8:30 PM. SHORT TERM CLOSURES OF THE MULTI-USE PATH WILL BE PERMITTED AT ALL OTHER TIMES TO ACCOMMODATE BEAM REMOVAL AND SETTING, DECK REMOVAL AND REPLACEMENT AND ALL OVERHEAD WORK ABOVE THE PATH. FLAGGERS SHALL BE STATIONED AT EACH END OF THE PATH DURING THE OVERHEAD SHORT TERM CLOSURES TO PREVENT PEDESTRIANS AND BICYCLISTS FROM CROSSING BENEATH THE WORK.

   ACCOMMODATIONS MAY BE MADE FOR SHORT TERM CLOSURES OF THE BIKE PATH DURING THE 5:30 AM TO 8:30 PM TIMEFRAME PROVIDED THAT AN ALTERNATE ROUTE FOR THE PATH CAN BE PROVIDED. COORDINATION AND APPROVAL OF THE ALTERNATE ROUTE SHALL BE WITH THE VILLAGE OF MORTON PARK DISTRICT. CONTACT MR. GARY WATSON, DIRECTOR, AT 309-263-7429 FOR COORDINATION AND APPROVAL A MINIMUM OF 7 CALENDAR DAYS PRIOR TO THE PROPOSED SHORT TERM CLOSURE.

2. PARCEL 4BDC014 & TE - COMMITMENT TO WILLIAM AND ESTHER BILLINGS

   1. THE FIVE MATURE TREES THAT FALL WITHIN THE PROPOSED TEMPORARY EASEMENT WILL NOT BE TOUCHED DURING CONSTRUCTION AND WILL BE ALLOWED TO REMAIN IN PLACE.

3. PARCEL 4BDC013 & TE - COMMITMENT TO GRIMM BROTHERS TRUCKING TO PROVIDE THE ACCOMMODATIONS AS LISTED.

   1. ACCESS TO AND FROM THE GRIMM BROTHERS TRUCKING FACILITY IS GAINED FROM A FRONTAGE ROAD LOCATED OFF OF JEFFERSON STREET. ACCESS TO THE FACILITY SHALL BE MAINTAINED AT THE FRONTAGE ROAD AT ALL TIMES DURING CONSTRUCTION.
   2. AN EXISTING ELECTRIC POLE THAT PROVIDES ELECTRIC HOOKUP SERVICE TO TRUCKS AT THE FACILITY IS LOCATED AT THE EXISTING PROPERTY LINE AT APPROXIMATE STATION 556+00. ELECTRIC SERVICE SHALL BE MAINTAINED TO THE EXISTING POLE, OR RELOCATED POLE, AT ALL TIMES DURING CONSTRUCTION.
   3. DURING THE WINTER SHUTDOWN PERIODS OF CONSTRUCTION, PROVISIONS SHALL BE MADE THAT ALLOWS FOR TRUCKS FROM GRIMM BROTHERS TRUCKING TO BE PARKED WITHIN THE AREA OF THE TEMPORARY EASEMENT.
   4. THE EXISTING AGGREGATE SURFACE COURSE LOCATED IN THE PARKING AREA BOUNDED BY THE EXISTING AND PROPOSED RIGHT OF WAY LINES SHALL BE REMOVED AND STOCKPILED AT A LOCATION WITHIN THE TEMPORARY EASEMENT AND BECOME THE PROPERTY OF THE PROPERTY OWNER. THE AGGREGATE SHALL BE STOCKPILED AT A LOCATION WITHIN THE AREA OF THE TEMPORARY EASEMENT THAT WILL NOT IMPEDE WORK TO BE COMPLETED BY THE CONTRACTOR. THE PROPERTY OWNER SHALL BE CONTACTED FOR COORDINATION ON WHERE TO STOCKPILE THE EXISTING AGGREGATE WITHIN THE TEMPORARY EASEMENT.

   CONTACT MR. MARK GRIMM, OPERATIONS MANAGER, AT GRIMM BROTHERS TRUCKING (309-263-2390 OR 800-660-4883) WITH QUESTIONS REGARDING THESE COMMITMENTS.

STATUS OF UTILITIES TO BE ADJUSTED

ROUTE	OFFSET	LOCATION	TYPE OF UTILITY	TYPE OF CONFLICT	UTILITY OWNER	DISPOSITION
I-74	RT. 145' TO 132'	500+82 TO 501+90	FIBER OPTIC	GRADING	LEVEL 3 COMMUNICATIONS	CAUTION
I-74	RT. 132'	501+90 TO 504+50	FIBER OPTIC	GRADING	LEVEL 3 COMMUNICATIONS	RELOCATE
I-74	RT. 120'	518+50 TO 525+20	FIBER OPTIC	GRADING	LEVEL 3 COMMUNICATIONS	RELOCATE
RAMP F	RT. 114' TO RT. 75'	327+30 TO 332+50	FIBER OPTIC	NEW DITCH	LEVEL 3 COMMUNICATIONS	RELOCATE
I-74	LT. 90' TO RT. 30'	569+00 TO 569+90	UNDERGROUND ELECTRIC	STORM SEWER	AMEREN ILLINOIS (ELECTRIC)	CAUTION
I-74	LT. 144' TO RT. 163'	566+50 TO 168+70	OVERHEAD ELECTRIC	STRUCTURE	AMEREN ILLINOIS (ELECTRIC)	RELOCATE
I-74	LT. 141' TO LT. 142'	545+00 TO 546+00	OVERHEAD ELECTRIC	DITCH CUT	AMEREN ILLINOIS (ELECTRIC)	RELOCATE
I-74	LT. 136' TO LT. 112'	551+00 TO 559+00	OVERHEAD ELECTRIC	EMBANKMENT	AMEREN ILLINOIS (ELECTRIC)	RELOCATE
JEFFERSON ST.	RT. 42'	21+25 TO 25+50	OVERHEAD ELECTRIC	NEW STRUCTURE	AMEREN ILLINOIS (ELECTRIC)	RELOCATE
RAMP F	RT. 105' TO RT. 48'	329+50 TO 334+00	OVERHEAD ELECTRIC	NEW EMBANKMENT	AMEREN ILLINOIS (ELECTRIC)	RELOCATE
I-74	LT. 141' TO RT. 170'	549+20 TO 551+30	GAS & WATER	FILL/CUT	VILLAGE OF MORTON	CAUTION/EXTEND CASINGS
JACKSON ST.	-----	-----	WATER/SANITARY	NEW STRUCTURE	VILLAGE OF MORTON	UNDETERMINED
RAMP E	-----	207+00 TO 211+00	GAS	FILL @ RAMP NEW ROW	VILLAGE OF MORTON	UNDETERMINED
RAMP F	RT. 37' TO RT. 45'	1011+80 TO 1013+20	(4) BURIED CABLE	GRADING	FRONTIER NORTH INC.	RELOCATE
I-74	RT. 133' TO LT. 133'	482+72	-----	-----	FRONTIER NORTH INC.	CAUTION
JEFFERSON ST.	RT. 38'	22+00 TO 25+50	OVERHEAD TELEPHONE	NEW STRUCTURE	FRONTIER NORTH INC.	RELOCATE
JEFFERSON ST.	LT. 30'	22+00 TO 25+50	OVERHEAD TELEPHONE	NEW STRUCTURE	FRONTIER NORTH INC.	RELOCATE
JACKSON ST.	RT. 35'	38+00 TO 41+50	OVERHEAD TELEPHONE	NEW STRUCTURE	FRONTIER NORTH INC.	RELOCATE

					L01E	L1CE				L01E	L1CE	L01E						
											90% FEDERAL	10% STATE						100% VILLAGE OF MORTON
SUMMARY OF QUANTITIES				URBAN	ROADWAY FAI 74 / FAI 155	I-155 OVER I-74 (RAMPS G & H)	I-74 OVER ABANDONED RAILROAD DEMOLITION	I-74 OVER JEFFERSON ST	I-74 OVER US 150 (JACKSON ST)	I-74 / I-155	MORTON AVE. OVER I-74	TRAFFIC SIGNALS	LIGHTING	SIGNING	LANDSCAPING	INTELLIGENT TRANSPORTATION SYSTEM	PINECREST DR PLANS	EMERGENCY VEHICLE PRE-EMPTION
					I-74 / I-155	SN 090-0165 (SB) SN 090-0166 (NB)	SN 090-0014 (WB) SN 090-0015 (EB)	SN 090-0167	SN 090-0169	OVERHEAD SIGN STRUCTURES	SN 090-0141							
CODE	ITEM		UNIT	TOTAL QUANTITY	0003	0008	0044	0010	0010	0040	0014	0021	0021	0021	0031	0021	0014	0021
20100110	TREE REMOVAL (6 TO 15 UNITS DIAMETER)		UNIT	2,011	2011													
20100210	TREE REMOVAL (OVER 15 UNITS DIAMETER)		UNIT	911	911													
20100500	TREE REMOVAL, ACRES		ACRE	0.50	0.50													
20200100	EARTH EXCAVATION		CU YD	468,371	468,371													
20400100	BORROW EXCAVATION		CU YD	317,782	317,782													
20700220	POROUS GRANULAR EMBANKMENT		CU YD	1,544	1,544													
20800150	TRENCH BACKFILL		CU YD	6,982	6,982													
21001000	GEOTECHNICAL FABRIC FOR GROUND STABILIZATION		SQ YD	258,244	258,244													
21101505	TOPSOIL EXCAVATION AND PLACEMENT		CU YD	196,909	196,909													
21400100	GRADING AND SHAPING DITCHES		FOOT	2,306	2,306													
* 25000210	SEEDING, CLASS 2A		ACRE	27.75											27.75			
* 25000300	SEEDING, CLASS 3		ACRE	27.25											27.25			
* 25000312	SEEDING, CLASS 4A		ACRE	40.75											40.75			
* 25000322	SEEDING, CLASS 5A		ACRE	68.00											68.00			

* SPECIALTY ITEM

FILE NAME =	DESIGNED - EJA	REVISED -
...\General\D468620-sht-SQ0.01.dgn	DRAWN - TMB	REVISED -
USER NAME = jrcambillo	CHECKED - JNR	REVISED -
PLOT DATE = 7/30/2012	DATE - JULY 20, 2012	REVISED -

benesch engineers · scientists · planners

STATE OF ILLINOIS
DEPARTMENT OF TRANSPORTATION

SUMMARY OF QUANTITIES

SCALE: NTS | SHEET NO. 1 OF 34 SHEETS | STA. | TO STA.

F.A.I. RTE.	SECTION	COUNTY	TOTAL SHEETS	SHEET NO.
*	90-(14R,14HB-4,14,14HV(B)BR)	TAZEWELL	2433	8
		CONTRACT NO. 68620		
	ILLINOIS	FED. AID PROJECT		

* 74 & 155

	SUMMARY OF QUANTITIES				L01E	L1CE				L01E	90% FEDERAL L1CE / 10% STATE	L01E						100% VILLAGE OF MORTON
				URBAN	ROADWAY FAI 74 / FAI 155	I-155 OVER I-74 (RAMPS G & H)	I-74 OVER ABANDONED RAILROAD DEMOLITION	I-74 OVER JEFFERSON ST	I-74 OVER US 150 (JACKSON ST)	I-74 / I-155	MORTON AVE. OVER I-74	TRAFFIC SIGNALS	LIGHTING	SIGNING	LANDSCAPING	INTELLIGENT TRANSPORTATION SYSTEM	PINECREST DR PLANS	EMERGENCY VEHICLE PRE-EMPTION
					I-74 / I-155	SN 090-0165 (SB) SN 090-0166 (NB)	SN 090-0014 (WB) SN 090-0015 (EB)	SN 090-0167	SN 090-0169	OVERHEAD SIGN STRUCTURES	SN 090-0141							
	CODE	ITEM	UNIT	TOTAL QUANTITY	0003	0008	0044	0010	0010	0040	0014	0021	0021	0021	0031	0021	0014	0021
*	25000350	SEEDING, CLASS 7	ACRE	191.50											191.50			
*	25000400	NITROGEN FERTILIZER NUTRIENT	POUND	4,954											4,954			
*	25000500	PHOSPHORUS FERTILIZER NUTRIENT	POUND	4,954											4,954			
*	25000600	POTASSIUM FERTILIZER NUTRIENT	POUND	4,954											4,954			
*••	25000750	MOWING	ACRE	96	96													
*	25100115	MULCH, METHOD 2	ACRE	191.50											191.50			
*	25100630	EROSION CONTROL BLANKET	SQ YD	17,323	17,323													
*	28000250	TEMPORARY EROSION CONTROL SEEDING	POUND	28,725	28,725													
	28000305	TEMPORARY DITCH CHECKS	FOOT	6,204	6,204													
	28000400	PERIMETER EROSION BARRIER	FOOT	21,686	21,686													
	28000500	INLET AND PIPE PROTECTION	EACH	234	234													
	28100705	STONE DUMPED RIPRAP, CLASS A3	SQ YD	2,674	2,674													
	28200200	FILTER FABRIC	SQ YD	2,674	2,674													
	30300108	AGGREGATE SUBGRADE IMPROVEMENT 8"	SQ YD	43,512	43,512													

* SPECIALTY ITEM

•• MOWING IS 100 % STATE

FILE NAME = ...\General\0468620-sht-500.02.dgn	DESIGNED - EJA	REVISED -
USER NAME = jreambillo	DRAWN - TMB	REVISED -
PLOT DATE = 7/30/2012	CHECKED - JNR	REVISED -
	DATE - JULY 20, 2012	REVISED -

benesch engineers · scientists · planners

STATE OF ILLINOIS
DEPARTMENT OF TRANSPORTATION

SUMMARY OF QUANTITIES

SCALE: NTS | SHEET NO. 2 OF 34 SHEETS | STA. | TO STA.

F.A.I. RTE.	SECTION	COUNTY	TOTAL SHEETS	SHEET NO.
•	90-(14R,14HB-4,14,14HVB)BR	TAZEWELL	2433	9
		CONTRACT NO. 68620		
	ILLINOIS	FED. AID PROJECT		

• 74 & 155

SUMMARY OF QUANTITIES			URBAN	L01E	L1CE				L01E	90% FEDERAL L1CE	10% STATE L01E						100% VILLAGE OF MORTON
				ROADWAY FAI 74 / FAI 155	I-155 OVER I-74 (RAMPS G & H)	I-74 OVER ABANDONED RAILROAD DEMOLITION	I-74 OVER JEFFERSON ST	I-74 OVER US 150 (JACKSON ST)	I-74 / I-155	MORTON AVE. OVER I-74	TRAFFIC SIGNALS	LIGHTING	SIGNING	LANDSCAPING	INTELLIGENT TRANSPORTATION SYSTEM	PINECREST DR PLANS	EMERGENCY VEHICLE PRE-EMPTION
				I-74 / I-155	SN 090-0165 (SB) SN 090-0166 (NB)	SN 090-0014 (WB) SN 090-0015 (EB)	SN 090-0167	SN 090-0169	OVERHEAD SIGN STRUCTURES	SN 090-0141							
CODE	ITEM	UNIT	TOTAL QUANTITY	0003	0008	0044	0010	0010	0040	0014	0021	0021	0021	0031	0021	0014	0021
30300112	AGGREGATE SUBGRADE IMPROVEMENT 12"	SQ YD	267,195	267,195													
31100300	SUBBASE GRANULAR MATERIAL, TYPE A 4"	SQ YD	21,088	21,088													
31100910	SUBBASE GRANULAR MATERIAL, TYPE A 12"	SQ YD	25,419	25,419													
31200500	STABILIZED SUBBASE - HOT-MIX ASPHALT, 4"	SQ YD	267,195	267,195													
35300400	PORTLAND CEMENT CONCRETE BASE COURSE 9"	SQ YD	76													76	
40600200	BITUMINOUS MATERIALS (PRIME COAT)	TON	526	526													
40600215	POLYMERIZED BITUMINOUS MATERIALS (PRIME COAT)	TON	2.3		0.5	0.6		0.7								0.5	
40600895	CONSTRUCTING TEST STRIP	EACH	3	3													
40600982	HOT-MIX ASPHALT SURFACE REMOVAL - BUTT JOINT	SQ YD	4,222	1,595	800	1,027		800									
40600990	TEMPORARY RAMP	SQ YD	6,505	6,000	134	172		134								65	
40603080	HOT-MIX ASPHALT BINDER COURSE, IL-19.0, N50	TON	1,714	1,714													
40603335	HOT-MIX ASPHALT SURFACE COURSE, MIX "D", N50	TON	416	416													
40603360	HOT-MIX ASPHALT SURFACE COURSE, MIX "E", N50	TON	708.2		166.2	211.2		242.3								88.5	
40702700	FURNISH PROFILOGRAPH	L SUM	1	1													

* SPECIALTY ITEM

FILE NAME = ...\General\D468620-sht-SQQ.03.dgn	DESIGNED - EJA	REVISED -
USER NAME = jrcombillo	DRAWN - TMB	REVISED -
PLOT DATE = 7/30/2012	CHECKED - JNR	REVISED -
	DATE - JULY 20, 2012	REVISED -

benesch engineers · scientists · planners

STATE OF ILLINOIS
DEPARTMENT OF TRANSPORTATION

SUMMARY OF QUANTITIES

SCALE: NTS | SHEET NO. 3 OF 34 SHEETS | STA. TO STA.

F.A.I. RTE.	SECTION	COUNTY	TOTAL SHEETS	SHEET NO.
*	90-E(4)R;(14HB-4,14,14HVBIBR)	TAZEWELL	2433	10
		CONTRACT NO. 68620		
	ILLINOIS FED. AID PROJECT			

* 74 & 155

SUMMARY OF QUANTITIES			URBAN	L01E	L1CE				L01E	90% FEDERAL L1CE	10% STATE L01E						100% VILLAGE OF MORTON
				ROADWAY FAI 74 / FAI 155	I-155 OVER I-74 (RAMPS G & H)	I-74 OVER ABANDONED RAILROAD DEMOLITION	I-74 OVER JEFFERSON ST	I-74 OVER US 150 (JACKSON ST)	I-74 / I-155	MORTON AVE. OVER I-74	TRAFFIC SIGNALS	LIGHTING	SIGNING	LANDSCAPING	INTELLIGENT TRANSPORTATION SYSTEM	PINECREST DR PLANS	EMERGENCY VEHICLE PRE-EMPTION
				I-74 / I-155	SN 090-0165 (SB) SN 090-0166 (NB)	SN 090-0014 (WB) SN 090-0015 (EB)	SN 090-0167	SN 090-0169	OVERHEAD SIGN STRUCTURES	SN 090-0141							
CODE	ITEM	UNIT	TOTAL QUANTITY	0003	0008	0044	0010	0010	0040	0014	0021	0021	0021	0031	0021	0014	0021
42000501	PORTLAND CEMENT CONCRETE PAVEMENT 10" (JOINTED)	SQ YD	27,244	27,244													
42000506	PORTLAND CEMENT CONCRETE PAVEMENT 10 1/4" (JOINTED)	SQ YD	35,903	35,903													
42001300	PROTECTIVE COAT	SQ YD	286,779	286,779													
42001420	BRIDGE APPROACH PAVEMENT CONNECTOR (PCC)	SQ YD	4,987	4,987													
42100320	CONTINUOUSLY REINFORCED PORTLAND CEMENT CONCRETE PAVEMENT 11"	SQ YD	103,750	103,750													
42100615	PAVEMENT REINFORCEMENT	SQ YD	103,750	103,750													
42101090	TRANSVERSE TERMINAL JOINT COMPLETE 24'	EACH	2	2													
42101436	LUG SYSTEM COMPLETE 36'	EACH	5	5													
42101447	LUG SYSTEM COMPLETE 47'	EACH	1	1													
44000100	PAVEMENT REMOVAL	SQ YD	157,445	157,445													
44000154	HOT-MIX ASPHALT SURFACE REMOVAL, 1 1/4"	SQ YD	1,263													1,263	
44000200	DRIVEWAY PAVEMENT REMOVAL	SQ YD	470	470													
44000500	COMBINATION CURB AND GUTTER REMOVAL	FOOT	7,451	7,451													
44003100	MEDIAN REMOVAL	SQ FT	34,533	33,852												681	

* SPECIALTY ITEM

FILE NAME = ...\General\0468620-sht-SQQ.04.dgn	DESIGNED - EJA	REVISED -	benesch engineers · scientists · planners	STATE OF ILLINOIS DEPARTMENT OF TRANSPORTATION	SUMMARY OF QUANTITIES
USER NAME = jreambillo	DRAWN - TMB	REVISED -			
PLOT DATE = 7/30/2012	CHECKED - JNR	REVISED -			SCALE: NTS · SHEET NO. 4 OF 34 SHEETS · STA. · TO STA.
	DATE - JULY 20, 2012	REVISED -			

F.A.I. RTE.	SECTION	COUNTY	TOTAL SHEETS	SHEET NO.
•	90-(14R)(14HB-4,14,14HVB)BR	TAZEWELL	2433	11
		CONTRACT NO. 68620		
	ILLINOIS	FED. AID PROJECT		

• 74 & 155

SUMMARY OF QUANTITIES				L01E	L1CE				L01E	90% FEDERAL L1CE / 10% STATE L01E							100% VILLAGE OF MORTON
			URBAN	ROADWAY FAI 74 / FAI 155	I-155 OVER I-74 (RAMPS G & H)	I-74 OVER ABANDONED RAILROAD DEMOLITION	I-74 OVER JEFFERSON ST	I-74 OVER US 150 (JACKSON ST)	I-74 / I-155	MORTON AVE. OVER I-74	TRAFFIC SIGNALS	LIGHTING	SIGNING	LANDSCAPING	INTELLIGENT TRANSPORTATION SYSTEM	PINECREST DR PLANS	EMERGENCY VEHICLE PRE-EMPTION
				I-74 / I-155	SN 090-0165 (SB) SN 090-0166 (NB)	SN 090-0014 (WB) SN 090-0015 (EB)	SN 090-0167	SN 090-0169	OVERHEAD SIGN STRUCTURES	SN 090-0141							
CODE	ITEM	UNIT	TOTAL QUANTITY	0003	0008	0044	0010	0010	0040	0014	0021	0021	0021	0031	0021	0014	0021
44004000	PAVED DITCH REMOVAL	FOOT	1,447	1,447													
44004250	PAVED SHOULDER REMOVAL	SQ YD	88,002	88,002													
44022025	PARTIAL DEPTH REMOVAL 2"	SQ YD	1,132	1,132													
44201721	CLASS D PATCHES, TYPE III, 6 INCH	SQ YD	22	22													
44201845	CLASS D PATCHES, TYPE IV, 16 INCH	SQ YD	80	80													
48101500	AGGREGATE SHOULDERS, TYPE B 6"	SQ YD	18,515	18,515													
48300500	PORTLAND CEMENT CONCRETE SHOULDERS 10"	SQ YD	8,613	8,613													
48300505	PORTLAND CEMENT CONCRETE SHOULDERS 10 1/4"	SQ YD	29,289	29,289													
48300600	PORTLAND CEMENT CONCRETE SHOULDERS 11"	SQ YD	68,449	68,449													
50100300	REMOVAL OF EXISTING STRUCTURES NO. 1	EACH	1		1												
50100400	REMOVAL OF EXISTING STRUCTURES NO. 2	EACH	1		1												
50100500	REMOVAL OF EXISTING STRUCTURES NO. 3	EACH	1				1										
50100600	REMOVAL OF EXISTING STRUCTURES NO. 4	EACH	1					1									
50100700	REMOVAL OF EXISTING STRUCTURES NO. 5	EACH	1					1									

✱ SPECIALTY ITEMS

FILE NAME =	DESIGNED - EJA	REVISED -
...\General\D468620-sht-S00.05.dgn	DRAWN - TMB	REVISED -
USER NAME = j-gambillo	CHECKED - JNR	REVISED -
PLOT DATE = 7/30/2012	DATE - JULY 20, 2012	REVISED -

benesch engineers · scientists · planners

STATE OF ILLINOIS
DEPARTMENT OF TRANSPORTATION

SUMMARY OF QUANTITIES

SCALE: NTS | SHEET NO. 5 OF 34 SHEETS | STA. | TO STA.

F.A.I. RTE.	SECTION	COUNTY	TOTAL SHEETS	SHEET NO.
*	90-(14R,(14HB-4,14,14HVB)BR)	TAZEWELL	2433	12
		CONTRACT NO. 68620		
	ILLINOIS FED. AID PROJECT			

* 74 & 155

SUMMARY OF QUANTITIES				L01E	L1CE				L01E	90% FEDERAL L1CE	10% STATE L01E						100% VILLAGE OF MORTON
			URBAN	ROADWAY FAI 74 / FAI 155	I-155 OVER I-74 (RAMPS G & H)	I-74 OVER ABANDONED RAILROAD DEMOLITION	I-74 OVER JEFFERSON ST	I-74 OVER US 150 (JACKSON ST)	I-74 / I-155	MORTON AVE. OVER I-74	TRAFFIC SIGNALS	LIGHTING	SIGNING	LANDSCAPING	INTELLIGENT TRANSPORTATION SYSTEM	PINECREST DR PLANS	EMERGENCY VEHICLE PRE-EMPTION
				I-74 / I-155	SN 090-0165 (SB) SN 090-0166 (NB)	SN 090-0014 (WB) SN 090-0015 (EB)	SN 090-0167	SN 090-0169	OVERHEAD SIGN STRUCTURES	SN 090-0141							
CODE	ITEM	UNIT	TOTAL QUANTITY	0003	0038	0044	0010	0010	0040	0014	0021	0021	0021	0031	0021	0014	0021
50100800	REMOVAL OF EXISTING STRUCTURES NO. 6	EACH	1			1											
50100900	REMOVAL OF EXISTING STRUCTURES NO. 7	EACH	1			1											
50102400	CONCRETE REMOVAL	CU YD	149.7							149.7							
50104400	CONCRETE HEADWALL REMOVAL	EACH	29	29													
50105220	PIPE CULVERT REMOVAL	FOOT	3,142	3,142													
50157300	PROTECTIVE SHIELD	SQ YD	870					512		358							
50200100	STRUCTURE EXCAVATION	CU YD	3,991		350	474	1,748	1,419									
50300225	CONCRETE STRUCTURES	CU YD	2,217.3		332.8		1,213.1	671.4									
50300255	CONCRETE SUPERSTRUCTURE	CU YD	3,460.3	6	810.9		856.0	1700.3		87.1							
50300260	BRIDGE DECK GROOVING	SQ YD	9,451		1,865		2,356	4,722		508							
50300285	FORM LINER TEXTURED SURFACE	SQ FT	8,943				8,943										
50300300	PROTECTIVE COAT	SQ YD	11,806		2,515		2,761	5,552		978							
50500105	FURNISHING AND ERECTING STRUCTURAL STEEL	L SUM	1		0.2		0.2	0.6									
50500405	FURNISHING AND ERECTING STRUCTURAL STEEL	POUND	4,010							4,010							

* SPECIALTY ITEMS

FILE NAME = ...\General\D468620-sht-500.06.dgn	DESIGNED - EJA	REVISED -
USER NAME = jroembillo	DRAWN - TMB	REVISED -
PLOT DATE = 7/30/2012	CHECKED - JNR	REVISED -
	DATE - JULY 20, 2012	REVISED -

benesch engineers · scientists · planners

STATE OF ILLINOIS
DEPARTMENT OF TRANSPORTATION

SUMMARY OF QUANTITIES

SCALE: NTS | SHEET NO. 6 OF 34 SHEETS | STA. TO STA.

F.A.I. RTE.	SECTION	COUNTY	TOTAL SHEETS	SHEET NO.
•	90-(14R;(14HB-4,14,14HVB)BR)	TAZEWELL	2433	13

CONTRACT NO. 68620

ILLINOIS FED. AID PROJECT

• 74 & 155

CODE	SUMMARY OF QUANTITIES ITEM	UNIT	TOTAL QUANTITY (URBAN)	ROADWAY FAI 74 / FAI 155 (L01E)	I-155 OVER I-74 (RAMPS G & H) (L1CE)	I-74 OVER ABANDONED RAILROAD DEMOLITION (L1CE)	I-74 OVER JEFFERSON ST (L1CE)	I-74 OVER US 150 (JACKSON ST) (L1CE)	I-74 / I-155 (L01E)	MORTON AVE. OVER I-74 (90% FEDERAL L1CE / 10% STATE L01E)	TRAFFIC SIGNALS (L01E)	LIGHTING (L01E)	SIGNING (L01E)	LANDSCAPING (L01E)	INTELLIGENT TRANSPORTATION SYSTEM (L01E)	PINECREST DR PLANS (L01E)	EMERGENCY VEHICLE PRE-EMPTION (100% VILLAGE OF MORTON)
				I-74 / I-155	SN 090-0165 (SB) SN 090-0166 (NB)	SN 090-0014 (WB) SN 090-0015 (EB)	SN 090-0167	SN 090-0169	OVERHEAD SIGN STRUCTURES	SN 090-0141							
				0003	0008	0044	0010	0010	0040	0014	0021	0021	0021	0031	0021	0014	0021
50500505	STUD SHEAR CONNECTORS	EACH	29,134		8,550		8,236	12,348									
50800205	REINFORCEMENT BARS, EPOXY COATED	POUND	1,040,980	1,180	264,120		297,740	461,500		16,440							
50800515	BAR SPLICERS	EACH	4,856				1,798	3,018		40							
50800530	MECHANICAL SPLICERS	EACH	348		212			136									
51100100	SLOPE WALL 4 INCH	SQ YD	2,191		872			1,319									
51200957	FURNISHING METAL SHELL PILES 12" X 0.250"	FOOT	5,134				5,134										
51201600	FURNISHING STEEL PILES HP12X53	FOOT	6,277		2,159			4,118									
51201900	FURNISHING STEEL PILES HP14X89	FOOT	8,327		4,015			4,312									
51202305	DRIVING PILES	FOOT	19,738		6,174		5,134	8,430									
51203200	TEST PILE METAL SHELLS	EACH	2				2										
51203600	TEST PILE STEEL HP12X53	EACH	4		2			2									
51203900	TEST PILE STEEL HP14X89	EACH	2		1			1									
51204650	PILE SHOES	EACH	138					138									
51500100	NAME PLATES	EACH	4		2		1	1									

✱ SPECIALTY ITEMS

FILE NAME =	DESIGNED - EJA	REVISED -
...\General\0468620-sht-500_07.dgn	DRAWN - TMB	REVISED -
USER NAME = jrcambillo	CHECKED - JNR	REVISED -
PLOT DATE = 7/30/2012	DATE - JULY 20, 2012	REVISED -

benesch engineers - scientists - planners

STATE OF ILLINOIS
DEPARTMENT OF TRANSPORTATION

SUMMARY OF QUANTITIES

SCALE: NTS | SHEET NO. 7 OF 34 SHEETS | STA. | TO STA.

F.A.I. RTE.	SECTION	COUNTY	TOTAL SHEETS	SHEET NO.
•	(90-(14R,(14HB-4,(4,14HVB)BR)	TAZEWELL	2433	14

CONTRACT NO. 68620

ILLINOIS FED. AID PROJECT

• 74 & 155

SUMMARY OF QUANTITIES			URBAN	L01E	L1CE				L01E	90% FEDERAL L1CE / 10% STATE L01E							100% VILLAGE OF MORTON
				ROADWAY FAI 74 / FAI 155	I-155 OVER I-74 (RAMPS G & H)	I-74 OVER ABANDONED RAILROAD DEMOLITION	I-74 OVER JEFFERSON ST	I-74 OVER US 150 (JACKSON ST)	I-74 / I-155	MORTON AVE. OVER I-74	TRAFFIC SIGNALS	LIGHTING	SIGNING	LANDSCAPING	INTELLIGENT TRANSPORTATION SYSTEM	PINECREST DR PLANS	EMERGENCY VEHICLE PRE-EMPTION
				I-74 / I-155	SN 090-0165 (SB) SN 090-0166 (NB)	SN 090-0014 (WB) SN 090-0015 (EB)	SN 090-0167	SN 090-0169	OVERHEAD SIGN STRUCTURES	SN 090-0141							
CODE	ITEM	UNIT	TOTAL QUANTITY	0003	0008	0044	0010	0010	0040	0014	0021	0021	0021	0031	0021	0014	0021
52000110	PREFORMED JOINT STRIP SEAL	FOOT	588.0				378.5			209.5							
52100520	ANCHOR BOLTS, 1"	EACH	96		40			56									
52100530	ANCHOR BOLTS, 1 1/4"	EACH	20		20												
52100540	ANCHOR BOLTS, 1 1/2"	EACH	148				112	36									
54210182	PIPE ELBOW, 12"	EACH	6	6													
54213657	PRECAST REINFORCED CONCRETE FLARED END SECTIONS 12"	EACH	1	1													
54213660	PRECAST REINFORCED CONCRETE FLARED END SECTIONS 15"	EACH	8	8													
54213663	PRECAST REINFORCED CONCRETE FLARED END SECTIONS 18"	EACH	6	6													
54213669	PRECAST REINFORCED CONCRETE FLARED END SECTIONS 24"	EACH	8	8													
54213675	PRECAST REINFORCED CONCRETE FLARED END SECTIONS 30"	EACH	3	3													
54213681	PRECAST REINFORCED CONCRETE FLARED END SECTIONS 36"	EACH	13	13													
54213687	PRECAST REINFORCED CONCRETE FLARED END SECTIONS 42"	EACH	1	1													
54215424	CAST-IN-PLACE REINFORCED CONCRETE END SECTIONS 24"	EACH	2	2													
54215430	CAST-IN-PLACE REINFORCED CONCRETE END SECTIONS 30"	EACH	2	2													

* SPECIALTY ITEMS

FILE NAME = ...\General\0468620-sht-500_08.dgn	DESIGNED - EJA	REVISED -
USER NAME = jroombillo	DRAWN - TMB	REVISED -
PLOT DATE = 7/30/2012	CHECKED - JNR	REVISED -
	DATE - JULY 20, 2012	REVISED -

benesch engineers · scientists · planners

STATE OF ILLINOIS
DEPARTMENT OF TRANSPORTATION

SUMMARY OF QUANTITIES

SCALE: NTS | SHEET NO. 8 OF 34 SHEETS | STA. TO STA.

F.A.I. RTE.	SECTION	COUNTY	TOTAL SHEETS	SHEET NO.
*	90-E(4R;14HB-4,14,14HVB)BR1	TAZEWELL	2433	15
		CONTRACT NO. 68620		
	ILLINOIS FED. AID PROJECT			

* 74 & 155

SUMMARY OF QUANTITIES				L01E	L1CE				L01E	90% FEDERAL L1CE	10% STATE L01E						100% VILLAGE OF MORTON
			URBAN	ROADWAY FAI 74 / FAI 155	I-155 OVER I-74 (RAMPS G & H)	I-74 OVER ABANDONED RAILROAD DEMOLITION	I-74 OVER JEFFERSON ST	I-74 OVER US 150 (JACKSON ST)	I-74 / I-155	MORTON AVE. OVER I-74	TRAFFIC SIGNALS	LIGHTING	SIGNING	LANDSCAPING	INTELLIGENT TRANSPORTATION SYSTEM	PINECREST DR PLANS	EMERGENCY VEHICLE PRE-EMPTION
				I-74 / I-155	SN 090-0165 (SB) SN 090-0166 (NB)	SN 090-0014 (WB) SN 090-0015 (EB)	SN 090-0167	SN 090-0169	OVERHEAD SIGN STRUCTURES	SN 090-0141							
CODE	ITEM	UNIT	TOTAL QUANTITY	0003	0038	0044	0010	0010	0040	0014	0021	0021	0021	0031	0021	0014	0021
54215436	CAST-IN-PLACE REINFORCED CONCRETE END SECTIONS 36"	EACH	3	3													
54215547	METAL END SECTIONS 12"	EACH	3	3													
54245405	INLET BOX, STANDARD 542506	EACH	2	2													
54247090	GRATING FOR CONCRETE FLARED END SECTION 12"	EACH	1	1													
54247100	GRATING FOR CONCRETE FLARED END SECTION 15"	EACH	8	8													
54247110	GRATING FOR CONCRETE FLARED END SECTION 18"	EACH	6	6													
54247130	GRATING FOR CONCRETE FLARED END SECTION 24"	EACH	8	8													
54247150	GRATING FOR CONCRETE FLARED END SECTION 30"	EACH	3	3													
54247170	GRATING FOR CONCRETE FLARED END SECTION 36"	EACH	13	13													
54247180	GRATING FOR CONCRETE FLARED END SECTION 42"	EACH	1	1													
54248510	CONCRETE COLLAR	CU YD	3	3													
550A0070	STORM SEWERS, CLASS A, TYPE 1 15"	FOOT	1,800	1,800													
550A0090	STORM SEWERS, CLASS A, TYPE 1 18"	FOOT	1,787	1,787													
550A0110	STORM SEWERS, CLASS A, TYPE 1 21"	FOOT	393	393													

✱ SPECIALTY ITEMS

FILE NAME =	DESIGNED - EJA	REVISED -
...\General\D468620-sht-SOQ.09.dgn	DRAWN - TMB	REVISED -
USER NAME = jreambillo	CHECKED - JNR	REVISED -
PLOT DATE = 7/30/2012	DATE - JULY 20, 2012	REVISED -

benesch engineers · scientists · planners

STATE OF ILLINOIS
DEPARTMENT OF TRANSPORTATION

SUMMARY OF QUANTITIES

SCALE: NTS | SHEET NO. 9 OF 34 SHEETS | STA. TO STA.

F.A.I. RTE.	SECTION	COUNTY	TOTAL SHEETS	SHEET NO.
•	90-(14R,14HB-4,14,14HVB)BR	TAZEWELL	2433	16
		CONTRACT NO. 68620		
	ILLINOIS FED. AID PROJECT			

• 74 & 155

SUMMARY OF QUANTITIES				L01E	L1CE				L01E	90% FEDERAL L1CE / 10% STATE L01E						100% VILLAGE OF MORTON
			URBAN	ROADWAY FAI 74 / FAI 155	I-155 OVER I-74 (RAMPS G & H)	I-74 OVER ABANDONED RAILROAD DEMOLITION	I-74 OVER JEFFERSON ST	I-74 OVER US 150 (JACKSON ST)	I-74 / I-155	MORTON AVE. OVER I-74	TRAFFIC SIGNALS	LIGHTING	SIGNING	LANDSCAPING	INTELLIGENT TRANSPORTATION SYSTEM	PINECREST DR PLANS	EMERGENCY VEHICLE PRE-EMPTION
				I-74 / I-155	SN 090-0165 (SB) SN 090-0166 (NB)	SN 090-0014 (WB) SN 090-0015 (EB)	SN 090-0167	SN 090-0169	OVERHEAD SIGN STRUCTURES	SN 090-0141							
CODE	ITEM	UNIT	TOTAL QUANTITY	0003	0008	0044	0010	0010	0040	0014	0021	0021	0021	0031	0021	0014	0021
550A0120	STORM SEWERS, CLASS A, TYPE 1 24"	FOOT	422	422													
550A0160	STORM SEWERS, CLASS A, TYPE 1 36"	FOOT	309	309													
550A0180	STORM SEWERS, CLASS A, TYPE 1 42"	FOOT	31	31													
550A0340	STORM SEWERS, CLASS A, TYPE 2 12"	FOOT	304	304													
550A0360	STORM SEWERS, CLASS A, TYPE 2 15"	FOOT	2,276	2,276													
550A0380	STORM SEWERS, CLASS A, TYPE 2 18"	FOOT	3,707	3,707													
550A0400	STORM SEWERS, CLASS A, TYPE 2 21"	FOOT	487	487													
550A0410	STORM SEWERS, CLASS A, TYPE 2 24"	FOOT	1,014	1,014													
550A0430	STORM SEWERS, CLASS A, TYPE 2 30"	FOOT	1,685	1,685													
550A0450	STORM SEWERS, CLASS A, TYPE 2 36"	FOOT	1,628	1,628													
550A0470	STORM SEWERS, CLASS A, TYPE 2 42"	FOOT	743	743													
550A0680	STORM SEWERS, CLASS A, TYPE 3 18"	FOOT	16	16													
550A0710	STORM SEWERS, CLASS A, TYPE 3 24"	FOOT	26	26													
550A0730	STORM SEWERS, CLASS A, TYPE 3 30"	FOOT	90	90													

* SPECIALTY ITEMS

FILE NAME =	DESIGNED - EJA	REVISED -
...\General\0468620-sht-500,10.dgn	DRAWN - TMB	REVISED -
USER NAME = jroombillo	CHECKED - JNR	REVISED -
PLOT DATE = 7/30/2012	DATE - JULY 20, 2012	REVISED -

benesch engineers · scientists · planners

STATE OF ILLINOIS
DEPARTMENT OF TRANSPORTATION

SUMMARY OF QUANTITIES

SCALE: NTS | SHEET NO. 10 OF 34 SHEETS | STA. TO STA.

F.A.I. RTE.	SECTION	COUNTY	TOTAL SHEETS	SHEET NO.
*	90-(14R;(14HB-4,14,14HVB)BR)	TAZEWELL	2433	17

CONTRACT NO. 68620

ILLINOIS FED. AID PROJECT

* 74 & 155

SUMMARY OF QUANTITIES				L01E	L1CE				L01E	90% FEDERAL L1CE	10% STATE L01E						100% VILLAGE OF MORTON
			URBAN	ROADWAY FAI 74 / FAI 155	I-155 OVER I-74 (RAMPS G & H)	I-74 OVER ABANDONED RAILROAD DEMOLITION	I-74 OVER JEFFERSON ST	I-74 OVER US 150 (JACKSON ST)	I-74 / I-155	MORTON AVE. OVER I-74	TRAFFIC SIGNALS	LIGHTING	SIGNING	LANDSCAPING	INTELLIGENT TRANSPORTATION SYSTEM	PINECREST DR PLANS	EMERGENCY VEHICLE PRE-EMPTION
				I-74 / I-155	SN 090-0165 (SB) SN 090-0166 (NB)	SN 090-0014 (WB) SN 090-0015 (EB)	SN 090-0167	SN 090-0169	OVERHEAD SIGN STRUCTURES	SN 090-0141							
CODE	ITEM	UNIT	TOTAL QUANTITY	0003	0008	0044	0010	0010	0040	0014	0021	0021	0021	0031	0021	0014	0021
550A0750	STORM SEWERS, CLASS A, TYPE 3 36"	FOOT	1,540	1,540													
550A0770	STORM SEWERS, CLASS A, TYPE 3 42"	FOOT	706	706													
550A0960	STORM SEWERS, CLASS A, TYPE 4 15"	FOOT	44	44													
550A0980	STORM SEWERS, CLASS A, TYPE 4 18"	FOOT	64	64													
55100500	STORM SEWER REMOVAL 12"	FOOT	511	511													
55100700	STORM SEWER REMOVAL 15"	FOOT	1,127	1,127													
55100900	STORM SEWER REMOVAL 18"	FOOT	60	60													
55101200	STORM SEWER REMOVAL 24"	FOOT	1,117	1,117													
55101400	STORM SEWER REMOVAL 30"	FOOT	101	101													
55101600	STORM SEWER REMOVAL 36"	FOOT	297	297													
55101900	STORM SEWER REMOVAL 48"	FOOT	200	200													
55200400	STORM SEWERS JACKED IN PLACE, 15"	FOOT	66	66													
55200600	STORM SEWERS JACKED IN PLACE, 18"	FOOT	173	173													
55201100	STORM SEWERS JACKED IN PLACE, 30"	FOOT	310	310													

✱ SPECIALTY ITEMS

FILE NAME = ...\General\D468620-sht-500.11.dgn	DESIGNED - EJA	REVISED -
USER NAME = jreambillo	DRAWN - TMB	REVISED -
PLOT DATE = 7/30/2012	CHECKED - JNR	REVISED -
	DATE - JULY 20, 2012	REVISED -

benesch engineers · scientists · planners

STATE OF ILLINOIS
DEPARTMENT OF TRANSPORTATION

SUMMARY OF QUANTITIES

SCALE: NTS | SHEET NO. 11 OF 34 SHEETS | STA. TO STA.

F.A.I. RTE.	SECTION	COUNTY	TOTAL SHEETS	SHEET NO.
•	90-(14R;(14HB-4,14,14HVB)BR)	TAZEWELL	2433	18
		CONTRACT NO. 68620		
	ILLINOIS	FED. AID PROJECT		

• 74 & 155

SUMMARY OF QUANTITIES				L01E	L1CE				L01E	90% FEDERAL L1CE	10% STATE L01E						100% VILLAGE OF MORTON
			URBAN	ROADWAY FAI 74 / FAI 155	I-155 OVER I-74 (RAMPS G & H)	I-74 OVER ABANDONED RAILROAD DEMOLITION	I-74 OVER JEFFERSON ST	I-74 OVER US 150 (JACKSON ST)	I-74 / I-155	MORTON AVE. OVER I-74	TRAFFIC SIGNALS	LIGHTING	SIGNING	LANDSCAPING	INTELLIGENT TRANSPORTATION SYSTEM	PINECREST DR PLANS	EMERGENCY VEHICLE PRE-EMPTION
				I-74 / I-155	SN 090-0165 (SB) SN 090-0166 (NB)	SN 090-0014 (WB) SN 090-0015 (EB)	SN 090-0167	SN 090-0169	OVERHEAD SIGN STRUCTURES	SN 090-0141							
CODE	ITEM	UNIT	TOTAL QUANTITY	0003	0008	0044	0010	0010	0040	0014	0021	0021	0021	0031	0021	0014	0021
55201300	STORM SEWERS JACKED IN PLACE, 36"	FOOT	269	269													
58700300	CONCRETE SEALER	SQ FT	16,084		2,273		13,811										
59100100	GEOCOMPOSITE WALL DRAIN	SQ YD	951		169		434	348									
60100060	CONCRETE HEADWALLS FOR PIPE DRAINS	EACH	97	97													
60100925	PIPE DRAINS 8"	FOOT	15	15													
60100935	PIPE DRAINS 10"	FOOT	15	15													
60105000	PIPE DRAINS, CORRUGATED STEEL OR ALUMINUM ALLOY 12"	FOOT	309	309													
60107600	PIPE UNDERDRAINS 4"	FOOT	53,339	53,339													
60107700	PIPE UNDERDRAINS 6"	FOOT	32,019	32,019													
60108100	PIPE UNDERDRAINS 4" (SPECIAL)	FOOT	3,113	3,113													
60108200	PIPE UNDERDRAINS 6" (SPECIAL)	FOOT	1,021	1,021													
60207605	CATCH BASINS, TYPE C, TYPE 8 GRATE	EACH	2	2													
60218400	MANHOLES, TYPE A, 4'-DIAMETER, TYPE 1 FRAME, CLOSED LID	EACH	17	17													
60219510	MANHOLES, TYPE A, 4'-DIAMETER, TYPE 20 FRAME AND GRATE	EACH	1	1													

* SPECIALTY ITEMS

FILE NAME =	DESIGNED - EJA	REVISED -
...\General\D468620-sht-500.12.dgn	DRAWN - TMB	REVISED -
USER NAME = jreombillo	CHECKED - JNR	REVISED -
PLOT DATE = 7/30/2012	DATE - JULY 20, 2012	REVISED -

benesch engineers · scientists · planners

STATE OF ILLINOIS
DEPARTMENT OF TRANSPORTATION

SUMMARY OF QUANTITIES

SCALE: NTS | SHEET NO. 12 OF 34 SHEETS | STA. TO STA.

F.A.I. RTE.	SECTION	COUNTY	TOTAL SHEETS	SHEET NO.
*	90-E(4R;(14HB-4,14,14HVB)BR)	TAZEWELL	2433	19

CONTRACT NO. 68620

ILLINOIS FED. AID PROJECT

* 74 & 155

SUMMARY OF QUANTITIES			URBAN	L01E	L1CE				L01E	90% FEDERAL L1CE	10% STATE L01E						100% VILLAGE OF MORTON
				ROADWAY FAI 74 / FAI 155	I-155 OVER I-74 (RAMPS G & H)	I-74 OVER ABANDONED RAILROAD DEMOLITION	I-74 OVER JEFFERSON ST	I-74 OVER US 150 (JACKSON ST)	I-74 / I-155	MORTON AVE. OVER I-74	TRAFFIC SIGNALS	LIGHTING	SIGNING	LANDSCAPING	INTELLIGENT TRANSPORTATION SYSTEM	PINECREST DR PLANS	EMERGENCY VEHICLE PRE-EMPTION
				I-74 / I-155	SN 090-0165 (SB) SN 090-0166 (NB)	SN 090-0014 (WB) SN 090-0015 (EB)	SN 090-0167	SN 090-0169	OVERHEAD SIGN STRUCTURES	SN 090-0141							
CODE	ITEM	UNIT	TOTAL QUANTITY	0003	0008	0044	0010	0010	0040	0014	0021	0021	0021	0031	0021	0014	0021
60221100	MANHOLES, TYPE A, 5'-DIAMETER, TYPE 1 FRAME, CLOSED LID	EACH	3	3													
60221700	MANHOLES, TYPE A, 5'-DIAMETER, TYPE 8 GRATE	EACH	1	1													
60223700	MANHOLES, TYPE A, 6'-DIAMETER, TYPE 1 FRAME, OPEN LID	EACH	4	4													
60223800	MANHOLES, TYPE A, 6'-DIAMETER, TYPE 1 FRAME, CLOSED LID	EACH	7	7													
60224005	MANHOLES, TYPE A, 6'-DIAMETER, TYPE 8 GRATE	EACH	1	1													
60224445	MANHOLES, TYPE A, 7'-DIAMETER, TYPE 1 FRAME, OPEN LID	EACH	1	1													
60224446	MANHOLES, TYPE A, 7'-DIAMETER, TYPE 1 FRAME, CLOSED LID	EACH	1	1													
60234200	INLETS, TYPE A, TYPE 1 FRAME, OPEN LID	EACH	1	1													
60236200	INLETS, TYPE A, TYPE 8 GRATE	EACH	1	1													
60237420	INLETS, TYPE A, TYPE 20 FRAME AND GRATE	EACH	2	2													
60257900	MANHOLES TO BE RECONSTRUCTED	EACH	3	3													
60270050	DRAINAGE STRUCTURES, TYPE 4 WITH TWO TYPE 20 FRAME AND GRATES	EACH	56	56													
60500040	REMOVING MANHOLES	EACH	5	5													
60500050	REMOVING CATCH BASINS	EACH	9	9													

* SPECIALTY ITEMS

FILE NAME = ...\General\0460620-sht-S00_13.dgn	DESIGNED - EJA	REVISED -	benesch engineers · scientists · planners	STATE OF ILLINOIS DEPARTMENT OF TRANSPORTATION	SUMMARY OF QUANTITIES	F.A.I. RTE. •	SECTION 90-[14R;(14HB-4,14,14HVB)BR]
USER NAME = jmcambillo	DRAWN - TMB	REVISED -				COUNTY TAZEWELL	TOTAL SHEETS 2433 / SHEET NO. 20
PLOT DATE = 7/30/2012	CHECKED - JNR	REVISED -			SCALE: NTS / SHEET NO. 13 OF 34 SHEETS / STA. TO STA.	CONTRACT NO. 68620	
	DATE - JULY 20, 2012	REVISED -				ILLINOIS FED. AID PROJECT	

• 74 & 155

SUMMARY OF QUANTITIES			URBAN	L01E	L1CE				L01E	90% FEDERAL L1CE	10% STATE L01E						100% VILLAGE OF MORTON
				ROADWAY FAI 74 / FAI 155	I-155 OVER I-74 (RAMPS G & H)	I-74 OVER ABANDONED RAILROAD DEMOLITION	I-74 OVER JEFFERSON ST	I-74 OVER US 150 (JACKSON ST)	I-74 / I-155	MORTON AVE. OVER I-74	TRAFFIC SIGNALS	LIGHTING	SIGNING	LANDSCAPING	INTELLIGENT TRANSPORTATION SYSTEM	PINECREST DR PLANS	EMERGENCY VEHICLE PRE-EMPTION
				I-74 / I-155	SN 090-0165 (SB) SN 090-0166 (NB)	SN 090-0014 (WB) SN 090-0015 (EB)	SN 090-0167	SN 090-0169	OVERHEAD SIGN STRUCTURES	SN 090-0141							
CODE	ITEM	UNIT	TOTAL QUANTITY	0003	0008	0044	0010	0010	0040	0014	0021	0021	0021	0031	0021	0014	0021
60500060	REMOVING INLETS	EACH	30	30													
60603500	COMBINATION CONCRETE CURB AND GUTTER, TYPE B-6.06	FOOT	76	76													
60603800	COMBINATION CONCRETE CURB AND GUTTER, TYPE B-6.12	FOOT	22	22													
60604400	COMBINATION CONCRETE CURB AND GUTTER, TYPE B-6.18	FOOT	39	39													
60605000	COMBINATION CONCRETE CURB AND GUTTER, TYPE B-6.24	FOOT	5,757	5,757													
60618300	CONCRETE MEDIAN SURFACE, 4 INCH	SQ FT	22,041	22,041													
60619600	CONCRETE MEDIAN, TYPE SB-6.12	SQ FT	191													191	
60620000	CONCRETE MEDIAN, TYPE SB-6.24	SQ FT	3,963	3,963													
60624600	CORRUGATED MEDIAN	SQ FT	6,299	6,299													
60900515	CONCRETE THRUST BLOCKS	EACH	3	3													
61000225	TYPE F INLET BOX, STANDARD 610001	EACH	1	1													
61100500	EXPLORATION TRENCH 52" DEPTH	FOOT	1,100	1,100													
61101007	STORM SEWERS PROTECTED, CLASS A, 6"	FOOT	660	660													
61101009	STORM SEWERS PROTECTED, CLASS A, 8"	FOOT	1,355	1,355													

* SPECIALTY ITEM

FILE NAME =	DESIGNED - EJA	REVISED -	benesch engineers · scientists · planners	STATE OF ILLINOIS DEPARTMENT OF TRANSPORTATION	SUMMARY OF QUANTITIES	F.A.I. RTE.	SECTION	COUNTY	TOTAL SHEETS / SHEET NO.
...\General\D468620-sht-SQQ_14.dgn	DRAWN - TMB	REVISED -				•	90-[14R;(14HB-4,14,14HVB)BR]	TAZEWELL	2433 / 21
USER NAME = jreambillo	CHECKED - JNR	REVISED -						CONTRACT NO. 68620	
PLOT DATE = 7/30/2012	DATE - JULY 20, 2012	REVISED -			SCALE: NTS / SHEET NO. 14 OF 34 SHEETS / STA. TO STA.		ILLINOIS FED. AID PROJECT		

• 74 & 155

	SUMMARY OF QUANTITIES		URBAN	L01E	L1CE				L01E	90% FEDERAL L1CE	10% STATE L01E						100% VILLAGE OF MORTON
				ROADWAY FAI 74 / FAI 155	I-155 OVER I-74 (RAMPS G & H)	I-74 OVER ABANDONED RAILROAD DEMOLITION	I-74 OVER JEFFERSON ST	I-74 OVER US 150 (JACKSON ST)	I-74 / I-155	MORTON AVE. OVER I-74	TRAFFIC SIGNALS	LIGHTING	SIGNING	LANDSCAPING	INTELLIGENT TRANSPORTATION SYSTEM	PINECREST DR PLANS	EMERGENCY VEHICLE PRE-EMPTION
				I-74 /I-155	SN 090-0165 (SB) SN 090-0166 (NB)	SN 090-0014 (WB) SN 090-0015 (EB)	SN 090-0167	SN 090-0169	OVERHEAD SIGN STRUCTURES	SN 090-0141							
CODE	ITEM	UNIT	TOTAL QUANTITY	0003	0008	0044	0010	0010	0040	0014	0021	0021	0021	0031	0021	0014	0021
61101011	STORM SEWERS PROTECTED, CLASS A, 10"	FOOT	1,813	1,813													
61101013	STORM SEWERS PROTECTED, CLASS A, 12"	FOOT	110	110													
61133100	FIELD TILE JUNCTION VAULTS, 2' DIA.	EACH	11	11													
61139900	STORM SEWERS (SPECIAL), 6"	FOOT	525	525													
61140000	STORM SEWERS (SPECIAL), 8"	FOOT	2,298	2,298													
* 63000001	STEEL PLATE BEAM GUARDRAIL, TYPE A, 6 FOOT POSTS	FOOT	6,278	6,278													
* 63100045	TRAFFIC BARRIER TERMINAL, TYPE 2	EACH	13	13													
* 63100070	TRAFFIC BARRIER TERMINAL, TYPE 5	EACH	4	4													
* 63100085	TRAFFIC BARRIER TERMINAL, TYPE 6	EACH	7	7													
* 63100167	TRAFFIC BARRIER TERMINAL, TYPE 1 (SPECIAL) TANGENT	EACH	16	16													
63200310	GUARDRAIL REMOVAL	FOOT	20,776	20,776													
63200400	CABLE ROAD GUARD REMOVAL	FOOT	9,839	9,839													
63301210	REMOVE AND REERECT STEEL PLATE BEAM GUARDRAIL, TYPE A	FOOT	37.5	37.5													
63301990	REMOVE AND REERECT TRAFFIC BARRIER TERMINALS, TYPE 1	EACH	2	2													

* SPECIALTY ITEM

FILE NAME = ...\General\0468620-sht-S00.15.dgn	DESIGNED - EJA	REVISED -
USER NAME = jreambillo	DRAWN - TMB	REVISED -
PLOT DATE = 7/30/2012	CHECKED - JNR	REVISED -
	DATE - JULY 20, 2012	REVISED -

benesch engineers - scientists - planners

STATE OF ILLINOIS
DEPARTMENT OF TRANSPORTATION

SUMMARY OF QUANTITIES

SCALE: NTS | SHEET NO. 15 OF 34 SHEETS | STA. TO STA.

F.A.I. RTE.	SECTION	COUNTY	TOTAL SHEETS	SHEET NO.
•	90-(14R,(14HB-4,14,14HVB)BR)	TAZEWELL	2433	22
		CONTRACT NO. 68620		
	ILLINOIS	FED. AID PROJECT		

• 74 & 155

SUMMARY OF QUANTITIES			URBAN	L01E	L1CE				L01E	90% FEDERAL L1CE	10% STATE L01E						100% VILLAGE OF MORTON
				ROADWAY FAI 74 / FAI 155	I-155 OVER I-74 (RAMPS G & H)	I-74 OVER ABANDONED RAILROAD DEMOLITION	I-74 OVER JEFFERSON ST	I-74 OVER US 150 (JACKSON ST)	I-74 / I-155	MORTON AVE. OVER I-74	TRAFFIC SIGNALS	LIGHTING	SIGNING	LANDSCAPING	INTELLIGENT TRANSPORTATION SYSTEM	PINECREST DR PLANS	EMERGENCY VEHICLE PRE-EMPTION
				I-74 / I-155	SN 090-0165 (SB) SN 090-0166 (NB)	SN 090-0014 (WB) SN 090-0015 (EB)	SN 090-0167	SN 090-0169	OVERHEAD SIGN STRUCTURES	SN 090-0141							
CODE	ITEM	UNIT	TOTAL QUANTITY	0003	0008	0044	0010	0010	0040	0014	0021	0021	0021	0031	0021	0014	0021
63500105	DELINEATORS	EACH	449	449													
63700175	CONCRETE BARRIER, SINGLE FACE, 42 INCH HEIGHT	FOOT	1,127	1,127													
63700275	CONCRETE BARRIER, DOUBLE FACE, 42 INCH HEIGHT	FOOT	1,216	1,216													
63700285	CONCRETE BARRIER, DOUBLE FACE, 48 INCH HEIGHT	FOOT	10,792	10,792													
63700805	CONCRETE BARRIER TRANSITION	FOOT	137	137													
63700900	CONCRETE BARRIER BASE	FOOT	13,135	13,135													
63801200	MODULAR GLARE SCREEN SYSTEM	FOOT	22,657	22,657													
64200116	SHOULDER RUMBLE STRIPS, 16 INCH	FOOT	56,891	56,891													
* 64300260	IMPACT ATTENUATORS (FULLY REDIRECTIVE, NARROW), TEST LEVEL 3	EACH	2	2													
* 64300370	IMPACT ATTENUATORS (FULLY REDIRECTIVE, WIDE), TEST LEVEL 3	EACH	3	3													
64300450	IMPACT ATTENUATORS (NON-REDIRECTIVE), TEST LEVEL 3	EACH	2												2		
64301090	ATTENUATOR BASE	SQ YD	236	134											102		
66400105	CHAIN LINK FENCE, 4'	FOOT	17,903	17,903													
66600105	FURNISHING AND ERECTING RIGHT OF WAY MARKERS	EACH	100	100													

* SPECIALTY ITEM

FILE NAME =	DESIGNED - EJA	REVISED -
...\General\0468620-sht-500_16.dgn	DRAWN - TMB	REVISED -
USER NAME = jreombillo	CHECKED - JNR	REVISED -
PLOT DATE = 7/30/2012	DATE - JULY 20, 2012	REVISED -

benesch engineers · scientists · planners

STATE OF ILLINOIS
DEPARTMENT OF TRANSPORTATION

SUMMARY OF QUANTITIES

SCALE: NTS | SHEET NO. 16 OF 34 SHEETS | STA. | TO STA.

F.A.I. RTE.	SECTION	COUNTY	TOTAL SHEETS	SHEET NO.
*	90-(14R;(14HB-4,(4,14HVB)BR)	TAZEWELL	2433	23
		CONTRACT NO. 68620		
	ILLINOIS FED. AID PROJECT			

* 74 & 155

	SUMMARY OF QUANTITIES			URBAN	L01E	L1CE				L01E	90% FEDERAL L1CE	10% STATE L01E						100% VILLAGE OF MORTON
					ROADWAY FAI 74 / FAI 155	I-155 OVER I-74 (RAMPS G & H)	I-74 OVER ABANDONED RAILROAD DEMOLITION	I-74 OVER JEFFERSON ST	I-74 OVER US 150 (JACKSON ST)	I-74 / I-155	MORTON AVE. OVER I-74	TRAFFIC SIGNALS	LIGHTING	SIGNING	LANDSCAPING	INTELLIGENT TRANSPORTATION SYSTEM	PINECREST DR PLANS	EMERGENCY VEHICLE PRE-EMPTION
					I-74 / I-155	SN 090-0165 (SB) SN 090-0166 (NB)	SN 090-0014 (WB) SN 090-0015 (EB)	SN 090-0167	SN 090-0169	OVERHEAD SIGN STRUCTURES	SN 090-0141							
CODE	ITEM		UNIT	TOTAL QUANTITY	0003	0008	0044	0010	0010	0040	0014	0021	0021	0021	0031	0021	0014	0021
66700205	PERMANENT SURVEY MARKERS, TYPE I		EACH	22	22													
66700305	PERMANENT SURVEY MARKERS, TYPE II		EACH	9	9													
67100100	MOBILIZATION		L SUM	1	1													
70106800	CHANGEABLE MESSAGE SIGN		CAL MO	385.5	385.5													
70200100	NIGHTTIME WORK ZONE LIGHTING		L SUM	1	1													
70300100	SHORT TERM PAVEMENT MARKING		FOOT	50,883	50,883													
* 70300510	PAVEMENT MARKING TAPE, TYPE III - LETTERS AND SYMBOLS		SQ FT	1,392	1,392													
* 70300520	PAVEMENT MARKING TAPE, TYPE III 4"		FOOT	604,485	604,485													
* 70300550	PAVEMENT MARKING TAPE, TYPE III 8"		FOOT	51,510	51,510													
* 70300560	PAVEMENT MARKING TAPE, TYPE III 12"		FOOT	26,822	26,822													
* 70300570	PAVEMENT MARKING TAPE, TYPE III 24"		FOOT	1,251	1,251													
70301000	WORK ZONE PAVEMENT MARKING REMOVAL		SQ FT	341,170	341,170													
70400100	TEMPORARY CONCRETE BARRIER		FOOT	60,837.5	60,837.5													
70400200	RELOCATE TEMPORARY CONCRETE BARRIER		FOOT	122,450	122,450													

* SPECIALTY ITEM

FILE NAME = ...\General\D468620-sht-SQ0.17.dgn	DESIGNED - EJA	REVISED -
USER NAME = jreambillo	DRAWN - TMB	REVISED -
PLOT DATE = 7/30/2012	CHECKED - JNR	REVISED -
	DATE - JULY 20, 2012	REVISED -

benesch engineers • scientists • planners

STATE OF ILLINOIS
DEPARTMENT OF TRANSPORTATION

SUMMARY OF QUANTITIES

SCALE: NTS | SHEET NO. 17 OF 34 SHEETS | STA. TO STA.

F.A.I. RTE.	SECTION	COUNTY	TOTAL SHEETS	SHEET NO.
•	90-I14R(I4HB-4,I4,I4HVB)BR1	TAZEWELL	2433	24

CONTRACT NO. 68620

ILLINOIS FED. AID PROJECT

• 74 & 155

	SUMMARY OF QUANTITIES			L01E	L1CE				L01E	90% FEDERAL L1CE	10% STATE L01E						100% VILLAGE OF MORTON
			URBAN	ROADWAY FAI 74 / FAI 155	I-155 OVER I-74 (RAMPS G & H)	I-74 OVER ABANDONED RAILROAD DEMOLITION	I-74 OVER JEFFERSON ST	I-74 OVER US 150 (JACKSON ST)	I-74 / I-155	MORTON AVE. OVER I-74	TRAFFIC SIGNALS	LIGHTING	SIGNING	LANDSCAPING	INTELLIGENT TRANSPORTATION SYSTEM	PINECREST DR PLANS	EMERGENCY VEHICLE PRE-EMPTION
				I-74 / I-155	SN 090-0165 (SB) SN 090-0166 (NB)	SN 090-0014 (NB) SN 090-0015 (EB)	SN 090-0167	SN 090-0169	OVERHEAD SIGN STRUCTURES	SN 090-0141							
CODE	ITEM	UNIT	TOTAL QUANTITY	0003	0008	0044	0010	0010	0040	0014	0021	0021	0021	0031	0021	0014	0021
* 72000100	SIGN PANEL - TYPE 1	SQ FT	125								10		115				
* 72000200	SIGN PANEL - TYPE 2	SQ FT	344										344				
* 72000300	SIGN PANEL - TYPE 3	SQ FT	7,231										7,231				
72400100	REMOVE SIGN PANEL ASSEMBLY - TYPE A	EACH	20	20													
72400200	REMOVE SIGN PANEL ASSEMBLY - TYPE B	EACH	30	30													
72400310	REMOVE SIGN PANEL - TYPE 1	SQ FT	22	22													
72400330	REMOVE SIGN PANEL - TYPE 3	SQ FT	137	137													
72600100	MILE POST MARKER ASSEMBLY	EACH	8										8				
* 72700100	STRUCTURAL STEEL SIGN SUPPORT - BREAKAWAY	POUND	42,492										42,492				
* 72800100	TELESCOPING STEEL SIGN SUPPORT	FOOT	38										38				
* 73000100	WOOD SIGN SUPPORT	FOOT	682										682				
* 73100100	BASE FOR TELESCOPING STEEL SIGN SUPPORT	EACH	4										4				
73300100	OVERHEAD SIGN STRUCTURE - SPAN, TYPE I-A (4'-0" X 4'-6")	FOOT	204						204								
73300200	OVERHEAD SIGN STRUCTURE - SPAN, TYPE II-A (4'-6" X 5'-3")	FOOT	155						155								

* SPECIALTY ITEM

FILE NAME =	DESIGNED - EJA	REVISED -	
...\General\D468620-sht-SOQ_18.dgn	DRAWN - TMB	REVISED -	
USER NAME = jreambillo	CHECKED - JNR	REVISED -	
PLOT DATE = 7/30/2012	DATE - JULY 20, 2012	REVISED -	

benesch engineers · scientists · planners

STATE OF ILLINOIS
DEPARTMENT OF TRANSPORTATION

SUMMARY OF QUANTITIES

SCALE: NTS | SHEET NO. 18 OF 34 SHEETS | STA. TO STA.

F.A.I. RTE.	SECTION	COUNTY	TOTAL SHEETS	SHEET NO.
*	90-(14,R,14HB-4,14,14HVB)BR	TAZEWELL	2433	25

CONTRACT NO. 68620

ILLINOIS FED. AID PROJECT

* 74 & 155

	SUMMARY OF QUANTITIES		URBAN	L01E	L1CE				L01E	90% FEDERAL L1CE	10% STATE L01E						100% VILLAGE OF MORTON
				ROADWAY FAI 74 / FAI 155	I-155 OVER I-74 (RAMPS G & H)	I-74 OVER ABANDONED RAILROAD DEMOLITION	I-74 OVER JEFFERSON ST	I-74 OVER US 150 (JACKSON ST)	I-74 / I-155	MORTON AVE. OVER I-74	TRAFFIC SIGNALS	LIGHTING	SIGNING	LANDSCAPING	INTELLIGENT TRANSPORTATION SYSTEM	PINECREST DR PLANS	EMERGENCY VEHICLE PRE-EMPTION
				I-74 / I-155	SN 090-0165 (SB) SN 090-0166 (NB)	SN 090-0014 (WB) SN 090-0015 (EB)	SN 090-0167	SN 090-0169	OVERHEAD SIGN STRUCTURES	SN 090-0141							
CODE	ITEM	UNIT	TOTAL QUANTITY	0003	0008	0044	0010	0010	0040	0014	0021	0021	0021	0031	0021	0014	0021
73300300	OVERHEAD SIGN STRUCTURE - SPAN, TYPE III-A (5'-0" X 7'-0")	FOOT	152						152								
73301810	OVERHEAD SIGN STRUCTURE WALKWAY, TYPE A	FOOT	343						343								
73302110	OVERHEAD SIGN STRUCTURE - CANTILEVER, TYPE I-C-A (24" X 4'-6")	FOOT	24						24								
73302210	OVERHEAD SIGN STRUCTURE - CANTILEVER, TYPE III-C-A (36" X 7'-0")	FOOT	32						32								
73400100	CONCRETE FOUNDATIONS	CU YD	85.5										85.5				
73400200	DRILLED SHAFT CONCRETE FOUNDATIONS	CU YD	214.9						214.9								
73600100	REMOVE OVERHEAD SIGN STRUCTURE - SPAN	EACH	6	6													
73600200	REMOVE OVERHEAD SIGN STRUCTURE - CANTILEVER	EACH	1	1													
73602000	REMOVE OVERHEAD SIGN STRUCTURE - BRIDGE MOUNTED	EACH	1	1													
73700100	REMOVE GROUND MOUNTED SIGN SUPPORT	EACH	59	59													
73700200	REMOVE CONCRETE FOUNDATION - GROUND MOUNT	EACH	59	59													
73700300	REMOVE CONCRETE FOUNDATION - OVERHEAD	EACH	13	13													
* 78003130	PREFORMED PLASTIC PAVEMENT MARKING, TYPE B - LINE 6"	FOOT	21,093	21,093													
* 78003140	PREFORMED PLASTIC PAVEMENT MARKING, TYPE B - LINE 8"	FOOT	1,693	1,693													

* SPECIALTY ITEM

FILE NAME = ...\General\D468620-sht-500_19.dgn	DESIGNED - EJA	REVISED -
	DRAWN - TMB	REVISED -
USER NAME = jeambillo	CHECKED - JNR	REVISED -
PLOT DATE = 7/30/2012	DATE - JULY 20, 2012	REVISED -

benesch engineers · scientists · planners

STATE OF ILLINOIS
DEPARTMENT OF TRANSPORTATION

SUMMARY OF QUANTITIES

SCALE: NTS | SHEET NO. 19 OF 34 SHEETS | STA. TO STA.

F.A.I. RTE.	SECTION	COUNTY	TOTAL SHEETS	SHEET NO.
*	90-(14R;(14HB-4,14,14HVB)BR)	TAZEWELL	2433	26
		CONTRACT NO. 68620		
	ILLINOIS	FED. AID PROJECT		

* 74 & 155

	SUMMARY OF QUANTITIES			URBAN	L01E	L1CE				L01E	90% FEDERAL L1CE	10% STATE L01E						100% VILLAGE OF MORTON
					ROADWAY FAI 74 / FAI 155	I-155 OVER I-74 (RAMPS G & H)	I-74 OVER ABANDONED RAILROAD DEMOLITION	I-74 OVER JEFFERSON ST	I-74 OVER US 150 (JACKSON ST)	I-74 / I-155	MORTON AVE. OVER I-74	TRAFFIC SIGNALS	LIGHTING	SIGNING	LANDSCAPING	INTELLIGENT TRANSPORTATION SYSTEM	PINECREST DR PLANS	EMERGENCY VEHICLE PRE-EMPTION
					I-74 / I-155	SN 090-0165 (SB) SN 090-0166 (NB)	SN 090-0014 (WB) SN 090-0015 (EB)	SN 090-0167	SN 090-0169	OVERHEAD SIGN STRUCTURES	SN 090-0141							
	CODE	ITEM	UNIT	TOTAL QUANTITY	0003	0008	0044	0010	0010	0040	0014	0021	0021	0021	0031	0021	0014	0021
*	78008310	POLYUREA PAVEMENT MARKING TYPE II - LINE 4"	FOOT	299,689	299,689													
*	78008340	POLYUREA PAVEMENT MARKING TYPE II - LINE 8"	FOOT	24,730	24,730													
*	78008350	POLYUREA PAVEMENT MARKING TYPE II - LINE 12"	FOOT	9,180	9,180													
*	78009000	MODIFIED URETHANE PAVEMENT MARKING - LETTERS AND SYMBOLS	SQ FT	1,002	982												20	
*	78009004	MODIFIED URETHANE PAVEMENT MARKING - LINE 4"	FOOT	144,345	143,513												832	
*	78009008	MODIFIED URETHANE PAVEMENT MARKING - LINE 8"	FOOT	22,174	21,978												196	
*	78009012	MODIFIED URETHANE PAVEMENT MARKING - LINE 12"	FOOT	3,252	3,252													
*	78009024	MODIFIED URETHANE PAVEMENT MARKING - LINE 24"	FOOT	371	371													
*	78100100	RAISED REFLECTIVE PAVEMENT MARKER	EACH	3,273	3,273													
*	78100105	RAISED REFLECTIVE PAVEMENT MARKER (BRIDGE)	EACH	67	67													
*	78200100	MONODIRECTIONAL PRISMATIC BARRIER REFLECTOR	EACH	119	119													
*	78200300	PRISMATIC CURB REFLECTOR	EACH	173	173													
*	78200410	GUARDRAIL MARKERS, TYPE A	EACH	84	84													
*	78201000	TERMINAL MARKER - DIRECT APPLIED	EACH	16	16													

* SPECIALTY ITEM

FILE NAME = ...\General\0468620-sht-SQ0.20.dgn	DESIGNED - EJA	REVISED -	benesch engineers · scientists · planners	STATE OF ILLINOIS DEPARTMENT OF TRANSPORTATION	SUMMARY OF QUANTITIES	F.A.I. RTE.	SECTION	COUNTY	TOTAL SHEETS / SHEET NO.
USER NAME = jreambillo	DRAWN - TMB	REVISED -				*	90-[]4R;(14HB-4,14,14HVB)BR]	TAZEWELL	2433 / 27
PLOT DATE = 7/30/2012	CHECKED - JNR	REVISED -						CONTRACT NO. 68620	
	DATE - JULY 20, 2012	REVISED -			SCALE: NTS / SHEET NO. 20 OF 34 SHEETS / STA. / TO STA.		ILLINOIS FED. AID PROJECT		

* 74 & 155

	SUMMARY OF QUANTITIES			URBAN	L01E	L1CE				L01E	90% FEDERAL L1CE	10% STATE L01E						100% VILLAGE OF MORTON
					ROADWAY FAI 74 / FAI 155	I-155 OVER I-74 (RAMPS G & H)	I-74 OVER ABANDONED RAILROAD DEMOLITION	I-74 OVER JEFFERSON ST	I-74 OVER US 150 (JACKSON ST)	I-74 / I-155	MORTON AVE. OVER I-74	TRAFFIC SIGNALS	LIGHTING	SIGNING	LANDSCAPING	INTELLIGENT TRANSPORTATION SYSTEM	PINECREST DR PLANS	EMERGENCY VEHICLE PRE-EMPTION
					I-74 / I-155	SN 090-0165 (SB) SN 090-0166 (NB)	SN 090-0014 (WB) SN 090-0015 (EB)	SN 090-0167	SN 090-0169	OVERHEAD SIGN STRUCTURES	SN 090-0141							
CODE	ITEM		UNIT	TOTAL QUANTITY	0003	0008	0044	0010	0010	0040	0014	0021	0021	0021	0031	0021	0014	0021
78300100	PAVEMENT MARKING REMOVAL		SQ FT	38,525	38,525													
* 80400100	ELECTRIC SERVICE INSTALLATION		EACH	4									3			1		
* 80500200	SERVICE INSTALLATION, TYPE B		EACH	2												2		
81028340	UNDERGROUND CONDUIT, PVC, 1 1/2" DIA.		FOOT	45,711												45,711		
81028350	UNDERGROUND CONDUIT, PVC, 2" DIA.		FOOT	22,358								3,129	2,141			17,088		
81028370	UNDERGROUND CONDUIT, PVC, 3" DIA.		FOOT	430								200				230		
81028380	UNDERGROUND CONDUIT, PVC, 3 1/2" DIA.		FOOT	433								433						
81028400	UNDERGROUND CONDUIT, PVC, 5" DIA.		FOOT	290									290					
81028730	UNDERGROUND CONDUIT, COILABLE NONMETALLIC CONDUIT, 1 1/4" DIA.		FOOT	250	250													
81028770	UNDERGROUND CONDUIT, COILABLE NONMETALLIC CONDUIT, 3" DIA.		FOOT	300	300													
81200230	CONDUIT EMBEDDED IN STRUCTURE, 2" DIA., PVC		FOOT	15,989									14,869			1,120		
81300555	JUNCTION BOX, STAINLESS STEEL, ATTACHED TO STRUCTURE, 12" X 12" X 8"		EACH	24									24					
81304035	JUNCTION BOX EMBEDDED IN STRUCTURE 8" X 24" X 10"		EACH	6									6					
81400200	HEAVY-DUTY HANDHOLE		EACH	24	4											20		

* SPECIALTY ITEM

FILE NAME =	DESIGNED - EJA	REVISED -
...\General\0468620-sht-S00.21.dgn	DRAWN - TWB	REVISED -
USER NAME = jreambillo	CHECKED - JNR	REVISED -
PLOT DATE = 7/30/2012	DATE - JULY 20, 2012	REVISED -

benesch engineers · scientists · planners

STATE OF ILLINOIS
DEPARTMENT OF TRANSPORTATION

SUMMARY OF QUANTITIES

SCALE: NTS | SHEET NO. 21 OF 34 SHEETS | STA. TO STA.

F.A.I. RTE.	SECTION	COUNTY	TOTAL SHEETS	SHEET NO.
•	90-(14R;(14HB-4,14,14HVB)BR)	TAZEWELL	2433	28

CONTRACT NO. 68620

ILLINOIS FED. AID PROJECT

• 74 & 155

	SUMMARY OF QUANTITIES			URBAN	L01E	L1CE				L01E	90% FEDERAL L1CE	10% STATE L01E						100% VILLAGE OF MORTON
					ROADWAY FAI 74 / FAI 155	I-155 OVER I-74 (RAMPS G & H)	I-74 OVER ABANDONED RAILROAD DEMOLITION	I-74 OVER JEFFERSON ST	I-74 OVER US 150 (JACKSON ST)	I-74 / I-155	MORTON AVE. OVER I-74	TRAFFIC SIGNALS	LIGHTING	SIGNING	LANDSCAPING	INTELLIGENT TRANSPORTATION SYSTEM	PINECREST DR PLANS	EMERGENCY VEHICLE PRE-EMPTION
					I-74 / I-155	SN 090-0165 (SB) SN 090-0166 (NB)	SN 090-0014 (WB) SN 090-0015 (EB)	SN 090-0167	SN 090-0169	OVERHEAD SIGN STRUCTURES	SN 090-0141							
CODE	ITEM		UNIT	TOTAL QUANTITY	0003	0008	0044	0010	0010	0040	0014	0021	0021	0021	0031	0021	0014	0021
81400700	HANDHOLE, PORTLAND CEMENT CONCRETE		EACH	15								13				2		
81400710	HEAVY-DUTY HANDHOLE, PORTLAND CEMENT CONCRETE		EACH	1								1						
81400720	DOUBLE HANDHOLE, PORTLAND CEMENT CONCRETE		EACH	2								2						
* 81603010	UNIT DUCT, 600V, 2 1C NO. 10, 1/C NO. 10 GND, (XLP-TYPE USE), 3/4" DIA. POLY.		FOOT	262									262					
* 81603032	UNIT DUCT, 600V, 2 1C NO. 4, 1/C NO. 6 GND, (XLP-TYPE USE), 1 1/4" DIA. POLY.		FOOT	17,041									17,041					
* 81603070	UNIT DUCT, 600V, 2 1C NO. 2, 1/C NO. 4 GND, (XLP-TYPE USE), 1 1/4" DIA. POLY.		FOOT	10,425									10,425					
* 81603095	UNIT DUCT, 600V, 4 1C NO. 2, 1/C NO. 4 GND, (XLP-TYPE USE), 1 1/2" DIA. POLY.		FOOT	1,193									1,193					
* 81603100	UNIT DUCT, 600V, 4 1C NO. 6, 1/C NO. 6 GND, (XLP-TYPE USE), 1 1/4" DIA. POLY.		FOOT	145									145					
* 81603110	UNIT DUCT, 600V, 4 1C NO. 4, 1/C NO. 6 GND, (XLP-TYPE USE), 1 1/2" DIA. POLY.		FOOT	2,221									2,221					
* 81702110	ELECTRIC CABLE IN CONDUIT, 600V (XLP-TYPE USE)	1/C NO. 10	FOOT	1,815									1,815					
* 81702120	ELECTRIC CABLE IN CONDUIT, 600V (XLP-TYPE USE)	1/C NO. 8	FOOT	4,258									4,258					
* 81702130	ELECTRIC CABLE IN CONDUIT, 600V (XLP-TYPE USE)	1/C NO. 6	FOOT	30,930								1,831	19,446			9,653		
* 81702140	ELECTRIC CABLE IN CONDUIT, 600V (XLP-TYPE USE)	1/C NO. 4	FOOT	24,939									24,939					
* 81702150	ELECTRIC CABLE IN CONDUIT, 600V (XLP-TYPE USE)	1/C NO. 2	FOOT	1,124									1,124					

* SPECIALTY ITEM

FILE NAME = ...\General\D468620-sht-500.22.dgn	DESIGNED - EJA	REVISED -
USER NAME = jroombillo	DRAWN - TMB	REVISED -
PLOT DATE = 7/30/2012	CHECKED - JNR	REVISED -
	DATE - JULY 20, 2012	REVISED -

benesch engineers · scientists · planners

STATE OF ILLINOIS
DEPARTMENT OF TRANSPORTATION

SUMMARY OF QUANTITIES

SCALE: NTS | SHEET NO. 22 OF 34 SHEETS | STA. TO STA.

F.A.I. RTE.	SECTION	COUNTY	TOTAL SHEETS	SHEET NO.
*	90-E14R;(14HB-4,14,14HVB)BR1	TAZEWELL	2433	29
		CONTRACT NO. 68620		
		ILLINOIS FED. AID PROJECT		

* 74 & 155

CODE	SUMMARY OF QUANTITIES ITEM	UNIT	TOTAL QUANTITY	URBAN													
				L01E	L1CE				L01E	90% FEDERAL L1CE / 10% STATE L01E							100% VILLAGE OF MORTON
				ROADWAY FAI 74 / FAI 155	I-155 OVER I-74 (RAMPS G & H)	I-74 OVER ABANDONED RAILROAD DEMOLITION	I-74 OVER JEFFERSON ST	I-74 OVER US 150 (JACKSON ST)	I-74 / I-155	MORTON AVE. OVER I-74	TRAFFIC SIGNALS	LIGHTING	SIGNING	LANDSCAPING	INTELLIGENT TRANSPORTATION SYSTEM	PINECREST DR PLANS	EMERGENCY VEHICLE PRE-EMPTION
				I-74 / I-155	SN 090-0165 (SB) SN 090-0166 (NB)	SN 090-0014 (WB) SN 090-0015 (EB)	SN 090-0167	SN 090-0169	OVERHEAD SIGN STRUCTURES	SN 090-0141							
				0003	0008	0044	0010	0010	0040	0014	0021	0021	0021	0031	0021	0014	0021
* 81702180	ELECTRIC CABLE IN CONDUIT, 600V (XLP-TYPE USE) 1/C NO. 3/0	FOOT	855									855					
* 82102250	LUMINAIRE, SODIUM VAPOR, HORIZONTAL MOUNT, 250 WATT	EACH	123									123					
* 82102400	LUMINAIRE, SODIUM VAPOR, HORIZONTAL MOUNT, 400 WATT	EACH	138									138					
* 82107200	UNDERPASS LUMINAIRE, 100 WATT, HIGH PRESSURE SODIUM VAPOR	EACH	8									8					
* 82500380	LIGHTING CONTROLLER, BASE MOUNTED, 480VOLT, 200AMP	EACH	3									3					
83060345	LIGHT POLE, GALVANIZED STEEL, 40 FT. M.H., 12 FT. MAST ARM, TWIN	EACH	11									11					
83060350	LIGHT POLE, GALVANIZED STEEL, 40 FT. M.H., 15 FT. MAST ARM	EACH	101									101					
83060543	LIGHT POLE, GALVANIZED STEEL, 50 FT. M.H., 12 FT. MAST ARM, TWIN	EACH	48									48					
83060550	LIGHT POLE, GALVANIZED STEEL, 50 FT. M.H., 15 FT. MAST ARM	EACH	39									39					
83600300	LIGHT POLE FOUNDATION, 30" DIAMETER	FOOT	867									867					
83800205	BREAKAWAY DEVICE, TRANSFORMER BASE, 15 INCH BOLT CIRCLE	EACH	138									138					
84200600	REMOVAL OF LIGHTING UNIT, NO SALVAGE	EACH	38									38					
84200804	REMOVAL OF POLE FOUNDATION	EACH	38									38					
84500110	REMOVAL OF LIGHTING CONTROLLER	EACH	2									2					

* SPECIALTY ITEM

FILE NAME =	DESIGNED - EJA	REVISED -
...\General\D468620-sht-S00_23.dgn	DRAWN - TWB	REVISED -
USER NAME = jreambillo	CHECKED - JNR	REVISED -
PLOT DATE = 7/30/2012	DATE - JULY 20, 2012	REVISED -

benesch engineers - scientists - planners

STATE OF ILLINOIS
DEPARTMENT OF TRANSPORTATION

SUMMARY OF QUANTITIES

SCALE: NTS | SHEET NO. 23 OF 34 SHEETS | STA. | TO STA.

F.A.I. RTE.	SECTION	COUNTY	TOTAL SHEETS	SHEET NO.
*	90-(14R;(14HB-4,14,14HVB)BR)	TAZEWELL	2433	30
		CONTRACT NO. 68620		
	ILLINOIS FED. AID PROJECT			

* 74 & 155

SUMMARY OF QUANTITIES			URBAN	L01E	L1CE				L01E	90% FEDERAL L1CE	10% STATE L01E						100% VILLAGE OF MORTON
				ROADWAY FAI 74 / FAI 155	I-155 OVER I-74 (RAMPS G & H)	I-74 OVER ABANDONED RAILROAD DEMOLITION	I-74 OVER JEFFERSON ST	I-74 OVER US 150 (JACKSON ST)	I-74 / I-155	MORTON AVE. OVER I-74	TRAFFIC SIGNALS	LIGHTING	SIGNING	LANDSCAPING	INTELLIGENT TRANSPORTATION SYSTEM	PINECREST DR PLANS	EMERGENCY VEHICLE PRE-EMPTION
				I-74 / I-155	SN 090-0165 (SB) SN 090-0166 (NB)	SN 090-0014 (WB) SN 090-0015 (EB)	SN 090-0167	SN 090-0169	OVERHEAD SIGN STRUCTURES	SN 090-0141							
CODE	ITEM	UNIT	TOTAL QUANTITY	0003	0008	0044	0010	0010	0040	0014	0021	0021	0021	0031	0021	0014	0021
84500120	REMOVAL OF ELECTRIC SERVICE INSTALLATION	EACH	2									2					
84500130	REMOVAL OF LIGHTING CONTROLLER FOUNDATION	EACH	2									2					
86300300	CONTROLLER CABINET TYPE III	EACH	1	1													
* 87100020	FIBER OPTIC CABLE IN CONDUIT, NO. 62.5/125, MM12F SM12F	FOOT	5,342												5,342		
* 87301245	ELECTRIC CABLE IN CONDUIT, SIGNAL NO. 14 5C	FOOT	2,566								2,566						
* 87301255	ELECTRIC CABLE IN CONDUIT, SIGNAL NO. 14 7C	FOOT	893								893						
* 87301515	ELECTRIC CABLE IN CONDUIT, LEAD-IN, NO. 18 3 PAIR	FOOT	2,627								2,627						
* 87301732	ELECTRIC CABLE IN CONDUIT, COMMUNICATION NO. 20 3C	FOOT	913														913
87502490	TRAFFIC SIGNAL POST, GALVANIZED STEEL 15 FT.	EACH	5								5						
87700400	STEEL MAST ARM ASSEMBLY AND POLE, 60 FT.	EACH	1								1						
87702218	STEEL MAST ARM ASSEMB. AND POLE WITH DUAL MAST ARMS, 20 FT. AND 36 FT.	EACH	1								1						
87702960	STEEL COMBINATION MAST ARM ASSEMBLY AND POLE 46 FT.	EACH	1								1						
87704519	STEEL COMB. MAST ARM ASMBLY & POLE WITH DUAL MAST ARMS, 48 FT. & 36 FT.	EACH	1								1						
87800100	CONCRETE FOUNDATION, TYPE A	FOOT	15								15						

* SPECIALTY ITEMS

FILE NAME = ...\General\D468620-sht-SOQ.24.dgn	DESIGNED - EJA	REVISED -	benesch engineers · scientists · planners	STATE OF ILLINOIS DEPARTMENT OF TRANSPORTATION	SUMMARY OF QUANTITIES	F.A.I. RTE.	SECTION	COUNTY	TOTAL SHEETS	SHEET NO.
USER NAME = jreambillo	DRAWN - TMB	REVISED -				*	90-[14R;(14HB-4,14,14HVB)BR]	TAZEWELL	2433	31
PLOT DATE = 7/30/2012	CHECKED - JNR	REVISED -						CONTRACT NO. 68620		
	DATE - JULY 20, 2012	REVISED -			SCALE: NTS / SHEET NO. 24 OF 34 SHEETS / STA. / TO STA.		ILLINOIS FED. AID PROJECT			

* 74 & 155

SUMMARY OF QUANTITIES			URBAN	L01E	L1CE				L01E	90% FEDERAL L1CE / 10% STATE	L01E						100% VILLAGE OF MORTON
				ROADWAY FAI 74 / FAI 155	I-155 OVER I-74 (RAMPS G & H)	I-74 OVER ABANDONED RAILROAD DEMOLITION	I-74 OVER JEFFERSON ST	I-74 OVER US 150 (JACKSON ST)	I-74 / I-155	MORTON AVE. OVER I-74	TRAFFIC SIGNALS	LIGHTING	SIGNING	LANDSCAPING	INTELLIGENT TRANSPORTATION SYSTEM	PINECREST DR PLANS	EMERGENCY VEHICLE PRE-EMPTION
				I-74 / I-155	SN 090-0165 (SB) SN 090-0166 (NB)	SN 090-0014 (WB) SN 090-0015 (EB)	SN 090-0167	SN 090-0169	OVERHEAD SIGN STRUCTURES	SN 090-0141							
CODE	ITEM	UNIT	TOTAL QUANTITY	0003	0008	0044	0010	0010	0040	0014	0021	0021	0021	0031	0021	0014	0021
87800200	CONCRETE FOUNDATION, TYPE D	FOOT	7								7						
87800215	CONCRETE FOUNDATION, TYPE D	EACH	1	1													
87800400	CONCRETE FOUNDATION, TYPE E 30-INCH DIAMETER	FOOT	20												20		
87800415	CONCRETE FOUNDATION, TYPE E 36-INCH DIAMETER	FOOT	99								39				60		
87800420	CONCRETE FOUNDATION, TYPE E 42-INCH DIAMETER	FOOT	21								21						
87900200	DRILL EXISTING HANDHOLE	EACH	6								1				5		
* 88030020	SIGNAL HEAD, LED, 1-FACE, 3-SECTION, MAST-ARM MOUNTED	EACH	12								12						
* 88030050	SIGNAL HEAD, LED, 1-FACE, 3-SECTION, BRACKET MOUNTED	EACH	5								5						
* 88030070	SIGNAL HEAD, LED, 1-FACE, 4-SECTION, BRACKET MOUNTED	EACH	3								3						
* 88030100	SIGNAL HEAD, LED, 1-FACE, 5-SECTION, BRACKET MOUNTED	EACH	2								2						
* 88200310	TRAFFIC SIGNAL BACKPLATE, LOUVERED, PLASTIC	EACH	19								19						
* 88500100	INDUCTIVE LOOP DETECTOR	EACH	15								15						
* 88600100	DETECTOR LOOP, TYPE I	FOOT	2,644	1,200							1,444						
* 88700200	LIGHT DETECTOR	EACH	4														4

* SPECIALTY ITEMS

FILE NAME = ...\General\D468620-sht-SQ0.25.dgn	DESIGNED - EJA	REVISED -
USER NAME = jmombillo	DRAWN - TMB	REVISED -
PLOT DATE = 7/30/2012	CHECKED - JNR	REVISED -
	DATE - JULY 20, 2012	REVISED -

benesch engineers · scientists · planners

STATE OF ILLINOIS
DEPARTMENT OF TRANSPORTATION

SUMMARY OF QUANTITIES

SCALE: NTS | SHEET NO. 25 OF 34 SHEETS | STA. TO STA.

F.A.I. RTE.	SECTION	COUNTY	TOTAL SHEETS	SHEET NO.
*	90-(14R,14HB-4,14,14HVB)BR1	TAZEWELL	2433	32
		CONTRACT NO. 68620		
		ILLINOIS FED. AID PROJECT		

* 74 & 155

	SUMMARY OF QUANTITIES		URBAN	LOIE	LICE				LOIE	90% FEDERAL LICE	10% STATE LOIE						100% VILLAGE OF MORTON
				ROADWAY FAI 74 / FAI 155	I-155 OVER I-74 (RAMPS G & H)	I-74 OVER ABANDONED RAILROAD DEMOLITION	I-74 OVER JEFFERSON ST	I-74 OVER US 150 (JACKSON ST)	I-74 / I-155	MORTON AVE. OVER I-74	TRAFFIC SIGNALS	LIGHTING	SIGNING	LANDSCAPING	INTELLIGENT TRANSPORTATION SYSTEM	PINECREST DR PLANS	EMERGENCY VEHICLE PRE-EMPTION
				I-74 / I-155	SN 090-0165 (SB) SN 090-0166 (NB)	SN 090-0014 (WB) SN 090-0015 (EB)	SN 090-0167	SN 090-0169	OVERHEAD SIGN STRUCTURES	SN 090-0141							
CODE	ITEM	UNIT	TOTAL QUANTITY	0003	0008	0044	0010	0010	0040	0014	0021	0021	0021	0031	0021	0014	0021
* 88700300	LIGHT DETECTOR AMPLIFIER	EACH	2														2
89000100	TEMPORARY TRAFFIC SIGNAL INSTALLATION	EACH	2								2						
89501250	RELOCATE EXISTING TRAFFIC SIGNAL EQUIPMENT	EACH	1								1						
* A2007674	TREE, TAXODIUM DISTICHUM (COMMON BALD CYPRESS), 10' HT, CLUMP FRM, B & B	EACH	42											42			
X0301242	PIEZO AXLE SENSOR, CLASS II	FOOT	66	66													
X0321809	PERMANENT GROUND ANCHOR	EACH	86				86										
* X0323160	VIDEO INSPECTION OF STORM SEWER	FOOT	1,105	1,105													
X0323265	REMOVE EXISTING RIPRAP	SQ YD	1,208	1,208													
X0323388	TRAFFIC COUNTER	EACH	5												5		
* X0323909	DATA NETWORK PORT ADAPTER	EACH	8												8		
X0323917	CABINET, MODEL 334	EACH	3												3		
X0323920	POLE MOUNTED EQUIPMENT CABINET, TYPE B	EACH	2												2		
X0323923	SUPPORT EQUIPMENT AND MAINTENANCE	L SUM	1												1		
X0324159	WHITEWASHING FOR CONCRETE PAVEMENT	SQ YD	267,195	267,195													

* SPECIALTY ITEMS

FILE NAME =	DESIGNED - EJA	REVISED -
...\General\D468620-sht-SQ0_26.dgn	DRAWN - TMB	REVISED -
USER NAME = jreambillo	CHECKED - JNR	REVISED -
PLOT DATE = 7/30/2012	DATE - JULY 20, 2012	REVISED -

benesch engineers · scientists · planners

STATE OF ILLINOIS
DEPARTMENT OF TRANSPORTATION

SUMMARY OF QUANTITIES

SCALE: NTS | SHEET NO. 26 OF 34 SHEETS | STA. TO STA.

F.A.I. RTE.	SECTION	COUNTY	TOTAL SHEETS	SHEET NO.
-	90-(14R;(14HB-4,14,14HVB)BR)	TAZEWELL	2433	33
		CONTRACT NO. 68620		
	ILLINOIS	FED. AID PROJECT		

* 74 & 155

	SUMMARY OF QUANTITIES			URBAN	LOIE	LICE				LOIE	90% FEDERAL LICE	10% STATE LOIE						100% VILLAGE OF MORTON
					ROADWAY FAI 74 / FAI 155	I-155 OVER I-74 (RAMPS G & H)	I-74 OVER ABANDONED RAILROAD DEMOLITION	I-74 OVER JEFFERSON ST	I-74 OVER US 150 (JACKSON ST)	I-74 / I-155	MORTON AVE. OVER I-74	TRAFFIC SIGNALS	LIGHTING	SIGNING	LANDSCAPING	INTELLIGENT TRANSPORTATION SYSTEM	PINECREST DR PLANS	EMERGENCY VEHICLE PRE-EMPTION
					I-74 / I-155	SN 090-0165 (SB) SN 090-0166 (NB)	SN 090-0014 (WB) SN 090-0015 (EB)	SN 090-0167	SN 090-0169	OVERHEAD SIGN STRUCTURES	SN 090-0141							
CODE	ITEM		UNIT	TOTAL QUANTITY	0003	0008	0044	0010	0010	0040	0014	0021	0021	0021	0031	0021	0014	0021
X0325318	LIGHTWEIGHT CELLULAR CONCRETE FILL		CU YD	474			474											
* X0325485	TRUSS MOUNTED LED DYNAMIC MESSAGE SIGN		EACH	1												1		
* X0325810	WIRELESS ETHERNET RADIO		EACH	1												1		
X0325833	WICK DRAINS		FOOT	391,859	391,859													
* X0325922	CELLULAR MODEM		EACH	2												2		
X0326337	DRAINAGE CONTROL STRUCTURE		EACH	1	1													
* X0326812	CAT 5 ETHERNET CABLE		FOOT	249												249		
* X0326905	CLOSED CIRCUIT TELEVISION DOME CAMERA, IP BASED		EACH	4												4		
* X0326906	CLOSED CIRCUIT TELEVISION DOME CAMERA, IP BASED (MATERIAL ONLY)		EACH	3												3		
* X0327116	SOLAR POWER ASSEMBLY		EACH	1	1													
X0327121	CAMERA POLE, 55 FT		EACH	3												3		
X0327423	CONNECTION TO EXISTING CULVERT		EACH	5	5													
X0327466	TRAFFIC COUNTER POST, GALVANIZED STEEL		EACH	4												4		

* SPECIALTY ITEMS

FILE NAME =	DESIGNED - EJA	REVISED -
...\General\D468620-sht-S00.27.dgn	DRAWN - TMB	REVISED -
USER NAME = jreambillo	CHECKED - JNR	REVISED -
PLOT DATE = 7/30/2012	DATE - JULY 20, 2012	REVISED -

benesch engineers · scientists · planners

STATE OF ILLINOIS
DEPARTMENT OF TRANSPORTATION

SUMMARY OF QUANTITIES

SCALE: NTS | SHEET NO. 27 OF 34 SHEETS | STA. | TO STA.

F.A.I. RTE.	SECTION	COUNTY	TOTAL SHEETS	SHEET NO.
*	90-(14R,(14HB-4,14,14HYB)BR)	TAZEWELL	2433	34
		CONTRACT NO. 68620		
	ILLINOIS FED. AID PROJECT			

* 74 & 155

SUMMARY OF QUANTITIES			URBAN	LOIE	LICE				LOIE	90% FEDERAL LICE	10% STATE LOIE						100% VILLAGE OF MORTON
				ROADWAY FAI 74 / FAI 155	I-155 OVER I-74 (RAMPS G & H)	I-74 OVER ABANDONED RAILROAD DEMOLITION	I-74 OVER JEFFERSON ST	I-74 OVER US 150 (JACKSON ST)	I-74 / I-155	MORTON AVE. OVER I-74	TRAFFIC SIGNALS	LIGHTING	SIGNING	LANDSCAPING	INTELLIGENT TRANSPORTATION SYSTEM	PINECREST DR PLANS	EMERGENCY VEHICLE PRE-EMPTION
CODE	ITEM	UNIT	TOTAL QUANTITY	I-74 / I-155	SN 090-0165 (SB) SN 090-0166 (NB)	SN 090-0014 (WB) SN 090-0015 (EB)	SN 090-0167	SN 090-0169	OVERHEAD SIGN STRUCTURES	SN 090-0141							
				0003	0008	0044	0010	0010	0040	0014	0021	0021	0021	0031	0021	0014	0021
X4400110	TEMPORARY PAVEMENT REMOVAL	SQ YD	129,532	129,532													
X4421000	PARTIAL DEPTH PATCHING	TON	127	127													
X4810200	AGGREGATE SHOULDER REMOVAL	CU YD	1,923	1,923													
X5121800	PERMANENT STEEL SHEET PILING	SQ FT	24,711				24,711										
X5210120	HIGH LOAD MULTI-ROTATIONAL BEARINGS, GUIDED EXPANSION, 250K	EACH	8				8										
X5210780	HIGH LOAD MULTI-ROTATIONAL BEARINGS, NON-GUIDED EXPANSION, 250K	EACH	12				12										
X5210850	HIGH LOAD MULTI-ROTATIONAL BEARINGS, NON-GUIDED EXPANSION, 600K	EACH	4					4									
X5426018	PRECAST REINFORCED CONCRETE FLARED DROP BOX END SECTIONS 18"	EACH	1	1													
X5426030	PRECAST REINFORCED CONCRETE FLARED DROP BOX END SECTIONS 30"	EACH	1	1													
X550A562	TEMPORARY STORM SEWERS, CLASS A, TYPE 2 12"	FOOT	489	489													
X550A566	TEMPORARY STORM SEWERS, CLASS A, TYPE 2 15"	FOOT	1,108	1,108													
X550A570	TEMPORARY STORM SEWERS, CLASS A, TYPE 2 18"	FOOT	1,488	1,488													
X550A576	TEMPORARY STORM SEWERS, CLASS A, TYPE 2 24"	FOOT	453	453													
X5860110	GRANULAR BACKFILL FOR STRUCTURES	CU YD	1,143		317			826									

* SPECIALTY ITEMS

FILE NAME = ...\General\D468620-sht-SQ0_28.dgn	DESIGNED - EJA	REVISED -
USER NAME = jrcambilo	DRAWN - TMB	REVISED -
PLOT DATE = 7/30/2012	CHECKED - JNR	REVISED -
	DATE - JULY 20, 2012	REVISED -

benesch engineers · scientists · planners

STATE OF ILLINOIS
DEPARTMENT OF TRANSPORTATION

SUMMARY OF QUANTITIES

SCALE: NTS | SHEET NO. 28 OF 34 SHEETS | STA. | TO STA.

F.A.I. RTE.	SECTION	COUNTY	TOTAL SHEETS	SHEET NO.
*	90-(14R,(14HB-4,14,14HVB)BR)	TAZEWELL	2433	35
		CONTRACT NO. 68620		
	ILLINOIS FED. AID PROJECT			

* 74 & 155

	SUMMARY OF QUANTITIES		URBAN	LOIE	LICE				LOIE	90% FEDERAL LICE	10% STATE LOIE						100% VILLAGE OF MORTON
				ROADWAY FAI 74 / FAI 155	I-155 OVER I-74 (RAMPS G & H)	I-74 OVER ABANDONED RAILROAD DEMOLITION	I-74 OVER JEFFERSON ST	I-74 OVER US 150 (JACKSON ST)	I-74 / I-155	MORTON AVE. OVER I-74	TRAFFIC SIGNALS	LIGHTING	SIGNING	LANDSCAPING	INTELLIGENT TRANSPORTATION SYSTEM	PINECREST DR PLANS	EMERGENCY VEHICLE PRE-EMPTION
				I-74 / I-155	SN 090-0165 (SB) SN 090-0166 (NB)	SN 090-0014 (WB) SN 090-0015 (EB)	SN 090-0167	SN 090-0169	OVERHEAD SIGN STRUCTURES	SN 090-0141							
CODE	ITEM	UNIT	TOTAL QUANTITY	0003	0008	0044	0010	0010	0040	0014	0021	0021	0021	0031	0021	0014	0021
X6020290	MANHOLES, TYPE A, 7'-DIAMETER, WITH SPECIAL FRAME AND GRATE	EACH	1	1													
X6020296	MANHOLES, TYPE A, 8'-DIAMETER, WITH SPECIAL FRAME AND GRATE	EACH	1	1													
X6021065	INLETS, TYPE G-1, SPECIAL	EACH	10	10													
X6021824	INLET-MANHOLE, TYPE G-1, 4' DIAMETER, SPECIAL	EACH	4	4													
X6022930	MANHOLES, TYPE A, 5'-DIAMETER, WITH SPECIAL FRAME AND GRATE	EACH	1	1													
X6028104	TEMPORARY MANHOLES, TYPE A, 4'-DIAMETER, TYPE 1 FRAME, OPEN LID	EACH	16	16													
X6028404	TEMPORARY INLETS, TYPE A, TYPE 1 FRAME, OPEN LID	EACH	16	16													
X6029001	JUNCTION BOX, NUMBER 1	L SUM	1	1													
X6029002	JUNCTION BOX, NUMBER 2	L SUM	1	1													
X6029003	JUNCTION BOX, NUMBER 3	L SUM	1	1													
X6050700	REMOVE INLET BOX	EACH	5	5													
* X6330725	STEEL PLATE BEAM GUARDRAIL (SHORT RADIUS)	FOOT	50	50													
X6350120	DELINEATOR REMOVAL	EACH	159	159													
X6380200	RELOCATE MODULAR GLARE SCREEN SYSTEM	FOOT	32,588	32,588													

* SPECIALTY ITEMS

FILE NAME = ..\General\D460620-sht-500.2%.dgn	DESIGNED - EJA	REVISED -
USER NAME = jroembillo	DRAWN - TMB	REVISED -
PLOT DATE = 7/30/2012	CHECKED - JNR	REVISED -
	DATE - JULY 20, 2012	REVISED -

benesch engineers · scientists · planners

STATE OF ILLINOIS
DEPARTMENT OF TRANSPORTATION

SUMMARY OF QUANTITIES

SCALE: NTS | SHEET NO. 29 OF 34 SHEETS | STA. TO STA.

F.A.I. RTE.	SECTION	COUNTY	TOTAL SHEETS	SHEET NO.
•	90-(14R;(14HB-4,14,14HVB)BR)	TAZEWELL	2433	36

CONTRACT NO. 68620

ILLINOIS FED. AID PROJECT

• 74 & 155

	SUMMARY OF QUANTITIES		URBAN	LOIE	LICE				LOIE	90% FEDERAL LICE	10% STATE LOIE						100% VILLAGE OF MORTON
				ROADWAY FAI 74 / FAI 155	I-155 OVER I-74 (RAMPS G & H)	I-74 OVER ABANDONED RAILROAD DEMOLITION	I-74 OVER JEFFERSON ST	I-74 OVER US 150 (JACKSON ST)	I-74 / I-155	MORTON AVE. OVER I-74	TRAFFIC SIGNALS	LIGHTING	SIGNING	LANDSCAPING	INTELLIGENT TRANSPORTATION SYSTEM	PINECREST DR PLANS	EMERGENCY VEHICLE PRE-EMPTION
				I-74 / I-155	SN 090-0165 (SB) SN 090-0166 (NB)	SN 090-0014 (WB) SN 090-0015 (EB)	SN 090-0167	SN 090-0169	OVERHEAD SIGN STRUCTURES	SN 090-0141							
CODE	ITEM	UNIT	TOTAL QUANTITY	0003	0008	0044	0010	0010	0040	0014	0021	0021	0021	0031	0021	0014	0021
X6700410	ENGINEER'S FIELD OFFICE, TYPE A (SPECIAL)	CAL MO	32	32													
X6700600	ENGINEER'S FIELD LABORATORY (SPECIAL)	CAL MO	32	32													
X7010216	TRAFFIC CONTROL AND PROTECTION, (SPECIAL)	L SUM	1	1													
X7010240	TRAFFIC CONTROL SURVEILLANCE (SPECIAL)	CAL DA	562	562													
X7200056	TEMPORARY SIGN PANEL ASSEMBLY	SQ FT	3,156	3156													
X7200057	TEMPORARY SIGN PANEL OVERLAY	SQ FT	528	528													
X7350100	RELOCATE OVERHEAD SIGN STRUCTURE - SPAN, SPECIAL	EACH	1												1		
* X7830068	GROOVING FOR RECESSED PAVEMENT MRKNG, LETTERS, NUMBERS & SYMBOLS	SQ FT	982	982													
* X7830070	GROOVING FOR RECESSED PAVEMENT MARKING 5"	FOOT	141,981	141,981													
* X7830074	GROOVING FOR RECESSED PAVEMENT MARKING 7"	FOOT	21,093	21,093													
* X7830076	GROOVING FOR RECESSED PAVEMENT MARKING 9"	FOOT	22,316	22,316													
* X7830078	GROOVING FOR RECESSED PAVEMENT MARKING 13"	FOOT	3,034	3,034													
* X7830090	GROOVING FOR RECESSED PAVEMENT MARKING 25"	FOOT	371	371													
X8110521	CONDUIT ATTACHED TO STRUCTURE, 1" DIA. STAINLESS STEEL	FOOT	501									501					

* SPECIALTY ITEMS

FILE NAME =	DESIGNED - EJA	REVISED -
...\General\0168620-sht-SOQ.30.dgn	DRAWN - TMB	REVISED -
USER NAME = jreambillo	CHECKED - JNR	REVISED -
PLOT DATE = 7/30/2012	DATE - JULY 20, 2012	REVISED -

benesch engineers · scientists · planners

STATE OF ILLINOIS
DEPARTMENT OF TRANSPORTATION

SUMMARY OF QUANTITIES

SCALE: NTS | SHEET NO. 30 OF 34 SHEETS | STA. | TO STA.

F.A.I. RTE.	SECTION	COUNTY	TOTAL SHEETS	SHEET NO.
*	90-(14R,(14HB-4,14,14HVB)BR)	TAZEWELL	2433	37

CONTRACT NO. 68620

ILLINOIS FED. AID PROJECT

* 74 & 155

	SUMMARY OF QUANTITIES		URBAN	LOIE	LICE				LOIE	90% FEDERAL LICE	10% STATE LOIE						100% VILLAGE OF MORTON
				ROADWAY FAI 74 / FAI 155	I-155 OVER I-74 (RAMPS G & H)	I-74 OVER ABANDONED RAILROAD DEMOLITION	I-74 OVER JEFFERSON ST	I-74 OVER US 150 (JACKSON ST)	I-74 / I-155	MORTON AVE. OVER I-74	TRAFFIC SIGNALS	LIGHTING	SIGNING	LANDSCAPING	INTELLIGENT TRANSPORTATION SYSTEM	PINECREST DR PLANS	EMERGENCY VEHICLE PRE-EMPTION
				I-74 / I-155	SN 090-0165 (SB) SN 090-0166 (NB)	SN 090-0014 (WB) SN 090-0015 (EB)	SN 090-0167	SN 090-0169	OVERHEAD SIGN STRUCTURES	SN 090-0141							
CODE	ITEM	UNIT	TOTAL QUANTITY	0003	0008	0044	0018	0010	0040	0014	0021	0021	0021	0031	0021	0014	0021
X8110522	CONDUIT ATTACHED TO STRUCTURE, 2" DIA. STAINLESS STEEL	FOOT	515									515					
X8110551	CONDUIT, FLEXIBLE NONMETALLIC, WEATHERPROOF, 1.0" DIAMETER	FOOT	60									60					
X8360110	LIGHT POLE FOUNDATION, SPECIAL	FOOT	260									260					
X8360310	LIGHT POLE FOUNDATION, 30" DIAMETER, SPECIAL	FOOT	24									24					
X8410102	TEMPORARY LIGHTING SYSTEM	L SUM	1									1					
* X8570226	FULL-ACTUATED CONTROLLER AND TYPE IV CABINET, SPECIAL	EACH	1								1						
* X8570231	FULL-ACTUATED CONTROLLER AND TYPE V CABINET, SPECIAL	EACH	1								1						
* X8710030	FIBER OPTIC CABLE 48 FIBERS, SINGLE MODE	FOOT	17,729												17,729		
* X8710050	FIBER OPTIC ETHERNET DROP AND REPEAT SWITCH	EACH	13												13		
* X8730810	ELECTRIC CABLE IN CONDUIT, CONOGA-30003	FOOT	2,000	2,000													
X8780107	CONCRETE FOUNDATION (SPECIAL)	FOOT	11												11		
Z0001002	GUARDRAIL AGGREGATE EROSION CONTROL	TON	1,519	1,519													
Z0013798	CONSTRUCTION LAYOUT	L SUM	1	1													
Z0018600	DRAINAGE STRUCTURES TO BE RECONSTRUCTED	EACH	7	7													
Z0020800	EROSION CONTROL CURB	FOOT	11	11													

* SPECIALTY ITEMS

FILE NAME =	DESIGNED - EJA	REVISED -
...\General\D468620-sht-500_31.dgn	DRAWN - TMB	REVISED -
USER NAME = jrenebillo	CHECKED - JNR	REVISED -
PLOT DATE = 7/30/2012	DATE - JULY 20, 2012	REVISED -

benesch engineers · scientists · planners

STATE OF ILLINOIS
DEPARTMENT OF TRANSPORTATION

SUMMARY OF QUANTITIES

SCALE: NTS | SHEET NO. 31 OF 34 SHEETS | STA. TO STA.

F.A.I. RTE.	SECTION	COUNTY	TOTAL SHEETS	SHEET NO.
•	90-(14R,(14HB-4,14,14HYB)BR)	TAZEWELL	2433	38
		CONTRACT NO. 68620		
		ILLINOIS FED. AID PROJECT		

• 74 & 155

SUMMARY OF QUANTITIES				LOIE	LICE				LOIE	90% FEDERAL LICE	10% STATE LOIE						100% VILLAGE OF MORTON
			URBAN	ROADWAY FAI 74 / FAI 155	I-155 OVER I-74 (RAMPS G & H)	I-74 OVER ABANDONED RAILROAD DEMOLITION	I-74 OVER JEFFERSON ST	I-74 OVER US 150 (JACKSON ST)	I-74 / I-155	MORTON AVE. OVER I-74	TRAFFIC SIGNALS	LIGHTING	SIGNING	LANDSCAPING	INTELLIGENT TRANSPORTATION SYSTEM	PINECREST DR PLANS	EMERGENCY VEHICLE PRE-EMPTION
				I-74 / I-155	SN 090-0165 (SB) SN 090-0166 (NB)	SN 090-0014 (WB) SN 090-0015 (EB)	SN 090-0167	SN 090-0169	OVERHEAD SIGN STRUCTURES	SN 090-0141							
CODE	ITEM	UNIT	TOTAL QUANTITY	0003	0008	0044	0010	0010	0040	0014	0021	0021	0021	0031	0021	0014	0021
Z0022800	FENCE REMOVAL	FOOT	19,217	19,217													
Z0023600	FILLING EXISTING CULVERTS	EACH	1	1													
Z0026407	TEMPORARY SHEET PILING	SQ FT	7,463			2,785	2,425	2,253									
Z0028462	GEOTEXTILE RETAINING WALL	SQ FT	4,144	4,144													
Z0029999	IMPACT ATTENUATOR REMOVAL	EACH	6	6													
Z0030240	IMPACT ATTENUATORS, TEMPORARY (NON- REDIRECTIVE), TEST LEVEL 2	EACH	9	9													
Z0030250	IMPACT ATTENUATORS, TEMPORARY (NON- REDIRECTIVE), TEST LEVEL 3	EACH	34	34													
* Z0030255	IMPACT ATTENUATORS, TEMP. (FULLY REDIRECTIVE, NARROW), TEST LEVEL 2	EACH	7	7													
* Z0030260	IMPACT ATTENUATORS, TEMP. (FULLY REDIRECTIVE, NARROW), TEST LEVEL 3	EACH	8	8													
* Z0030320	IMPACT ATTENUATORS, RELOCATE (FULLY REDIRECTIVE), TEST LEVEL 2	EACH	1	1													
* Z0030330	IMPACT ATTENUATORS, RELOCATE (FULLY REDIRECTIVE), TEST LEVEL 3	EACH	4	4													
Z0030340	IMPACT ATTENUATORS, RELOCATE (NON- REDIRECTIVE), TEST LEVEL 2	EACH	3	3													

* SPECIALTY ITEMS

FILE NAME = ...\General\D468620-sht-500.32.dgn	DESIGNED - EJA	REVISED -	benesch engineers - scientists - planners
USER NAME = jrcambillo	DRAWN - TMB	REVISED -	STATE OF ILLINOIS DEPARTMENT OF TRANSPORTATION
PLOT DATE = 7/30/2012	CHECKED - JNR	REVISED -	
	DATE - JULY 20, 2012	REVISED -	

SUMMARY OF QUANTITIES

SCALE: NTS | SHEET NO. 32 OF 34 SHEETS | STA. TO STA.

F.A.I. RTE.	SECTION	COUNTY	TOTAL SHEETS	SHEET NO.
*	90-(14R,(14HB-4,14,14HVB)BR)	TAZEWELL	2433	39

CONTRACT NO. 68620

ILLINOIS FED. AID PROJECT

* 74 & 155

SUMMARY OF QUANTITIES			URBAN	LOIE	LICE				LOIE	90% FEDERAL LICE	10% STATE LOIE						100% VILLAGE OF MORTON
				ROADWAY FAI 74 / FAI 155	I-155 OVER I-74 (RAMPS G & H)	I-74 OVER ABANDONED RAILROAD DEMOLITION	I-74 OVER JEFFERSON ST	I-74 OVER US 150 (JACKSON ST)	I-74 / I-155	MORTON AVE. OVER I-74	TRAFFIC SIGNALS	LIGHTING	SIGNING	LANDSCAPING	INTELLIGENT TRANSPORTATION SYSTEM	PINECREST DR PLANS	EMERGENCY VEHICLE PRE-EMPTION
				I-74 / I-155	SN 090-0165 (SB) SN 090-0166 (NB)	SN 090-0014 (WB) SN 090-0015 (EB)	SN 090-0167	SN 090-0169	OVERHEAD SIGN STRUCTURES	SN 090-0141							
CODE	ITEM	UNIT	TOTAL QUANTITY	0003	0068	0044	0010	0010	0040	0014	0021	0021	0021	0031	0021	0014	0021
Z0030350	IMPACT ATTENUATORS, RELOCATE (NON- REDIRECTIVE), TEST LEVEL 3	EACH	27	27													
Z0032400	JOINT REPAIR	EACH	20	20													
Z0033052	COMMUNICATIONS VAULT	EACH	6												6		
Z0033068	TRAFFIC SIGNAL BATTERY BACKUP SYSTEM	EACH	2								2						
Z0046304	PIPE UNDERDRAINS FOR STRUCTURES 4"	FOOT	1,596		246		1,007	343									
Z0048665	RAILROAD PROTECTIVE LIABILITY INSURANCE	L SUM	1												1		
Z0056100	SAND DRAINAGE BLANKET	CU YD	74,619	74,619													
Z0062456	TEMPORARY PAVEMENT	SQ YD	129,532	129,532													
Z0065100	SETTLEMENT PLATFORMS	EACH	13	13													
Z0065745	SLOTTED DRAIN 12" WITH 2 1/2" SLOT	FOOT	325	325													
Z0073002	TEMPORARY SOIL RETENTION SYSTEM	SQ FT	2,492				2,492										

* SPECIALTY ITEMS

FILE NAME =	DESIGNED -	REVISED -
...\General\0468620-sht-500_33.dgn	DRAWN -	REVISED -
USER NAME = jrsambillo	CHECKED -	REVISED -
PLOT DATE = 7/30/2012	DATE - JULY 20, 2012	REVISED -

benesch
engineers · scientists · planners

STATE OF ILLINOIS
DEPARTMENT OF TRANSPORTATION

SUMMARY OF QUANTITIES

SCALE: NTS | SHEET NO. 33 OF 34 SHEETS | STA. | TO STA.

F.A.I. RTE.	SECTION	COUNTY	TOTAL SHEETS	SHEET NO.
*	90-E14R;E14HB-4,E4,E4HVB(BR)	TAZEWELL	2433	40

CONTRACT NO. 68620

ILLINOIS FED. AID PROJECT

* 74 & 155

SUMMARY OF QUANTITIES			URBAN	L01E	L1CE				L01E	90% FEDERAL L1CE	10% STATE L01E						100% VILLAGE OF MORTON
				ROADWAY FAI 74 / FAI 155	I-155 OVER I-74 (RAMPS G & H)	I-74 OVER ABANDONED RAILROAD DEMOLITION	I-74 OVER JEFFERSON ST	I-74 OVER US 150 (JACKSON ST)	I-74 / I-155	MORTON AVE. OVER I-74	TRAFFIC SIGNALS	LIGHTING	SIGNING	LANDSCAPING	INTELLIGENT TRANSPORTATION SYSTEM	PINECREST DR PLANS	EMERGENCY VEHICLE PRE-EMPTION
				I-74 / I-155	SN 090-0165 (SB) SN 090-0166 (NB)	SN 090-0014 (WB) SN 090-0015 (EB)	SN 090-0167	SN 090-0169	OVERHEAD SIGN STRUCTURES	SN 090-0141							
CODE	ITEM	UNIT	TOTAL QUANTITY	0003	0008	0044	0010	0010	0040	0014	0021	0021	0021	0031	0021	0014	0021
Z0076600	TRAINEES	HOUR	2,000	2,000													
Z0076604	TRAINEES TRAINING PROGRAM GRADUATE	HOUR	2,000	2,000													

• SPECIALTY ITEMS

FILE NAME •	DESIGNED -	REVISED -	benesch engineers · scientists · planners	STATE OF ILLINOIS DEPARTMENT OF TRANSPORTATION	SUMMARY OF QUANTITIES	F.A.I. RTE.	SECTION	COUNTY	TOTAL SHEETS	SHEET NO.
...\General\0468620-sht-SQQ_34.dgn	DRAWN -	REVISED -				•	90-[14R;(14HB-4,14,14HVB)BR]	TAZEWELL	2433	41
USER NAME = jreambillo	CHECKED -	REVISED -			SCALE: NTS / SHEET NO. 34 OF 34 SHEETS / STA. TO STA.	CONTRACT NO. 68620				
PLOT DATE = 7/30/2012	DATE - JULY 20, 2012	REVISED -				ILLINOIS FED. AID PROJECT				

• 74 & 155

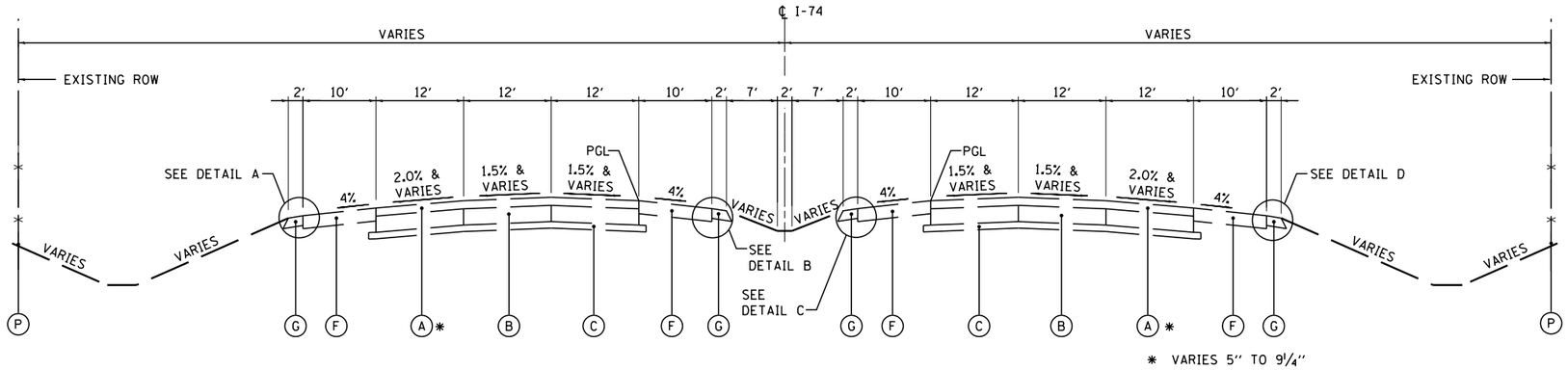

EXISTING TYPICAL SECTION (A)
I–74

STA 464+54.83 TO STA 517+15.00 (WB)
STA 473+00.00 TO STA 515+20.00 (EB)

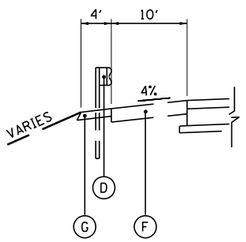

STA 465+59 TO STA 470+75
STA 482+30 TO STA 485+08
STA 489+56 TO STA 497+93
STA 508+53 TO STA 511+18
STA 536+30 TO STA 577+71

DETAIL A

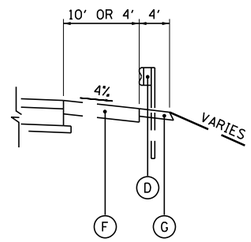

STA 494+78 TO STA 498+21
STA 507+92 TO STA 510+79
STA 515+85 TO STA 519+78
STA 538+91 TO STA 544+57
STA 549+06 TO STA 554+84
STA 566+67 TO STA 578+69

DETAIL B

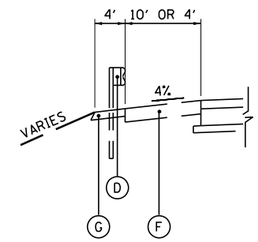

STA 491+43 TO STA 495+06
STA 504+67 TO STA 508+02
STA 513+76 TO STA 516+26
STA 535+46 TO STA 541+17
STA 545+66 TO STA 551+45
STA 563+26 TO STA 570+43
STA 572+64 TO STA 575+52

DETAIL C

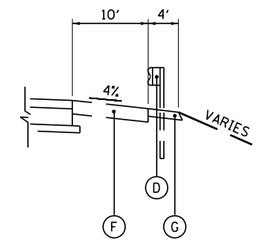

STA 479+93 TO STA 487+56
STA 513+43 TO STA 516+22
STA 533+20 TO STA 545+79
STA 551+84 TO STA 571+29

DETAIL D

EXISTING LEGEND:

- (A) EXISTING H.M.A. OVERLAY - VARIES
- (B) EXISTING P.C.C. PAVEMENT 9¼" TO 10¼"
- (C) EXISTING SUB-BASE GRANULAR MATERIAL 3" TO 6"
- (D) EXISTING GUARDRAIL
- (E) EXISTING P.C.C. SHOULDER 9¼" TO 10¼"
- (F) EXISTING H.M.A. SHOULDER 8" TO 10"
- (G) EXISTING AGGREGATE SHOULDER TYPE B 6"
- (H) EXISTING PIPE UNDERDRAIN 4"
- (I) EXISTING STABILIZED SUB-BASE, 4"
- (J) EXISTING SUB-BASE GRANULAR MATERIAL, TYPE A, 12"
- (K) EXISTING SUB-BASE GRANULAR MATERIAL, TYPE C
- (L) EXISTING SUB-BASE GRANULAR MATERIAL, TYPE A, 6"
- (M) EXISTING H.M.A. OVERLAY 2½"
- (N) EXISTING H.M.A. OVERLAY 5½"
- (O) EXISTING H.M.A. OVERLAY 5"
- (P) EXISTING CHAIN LINK FENCE

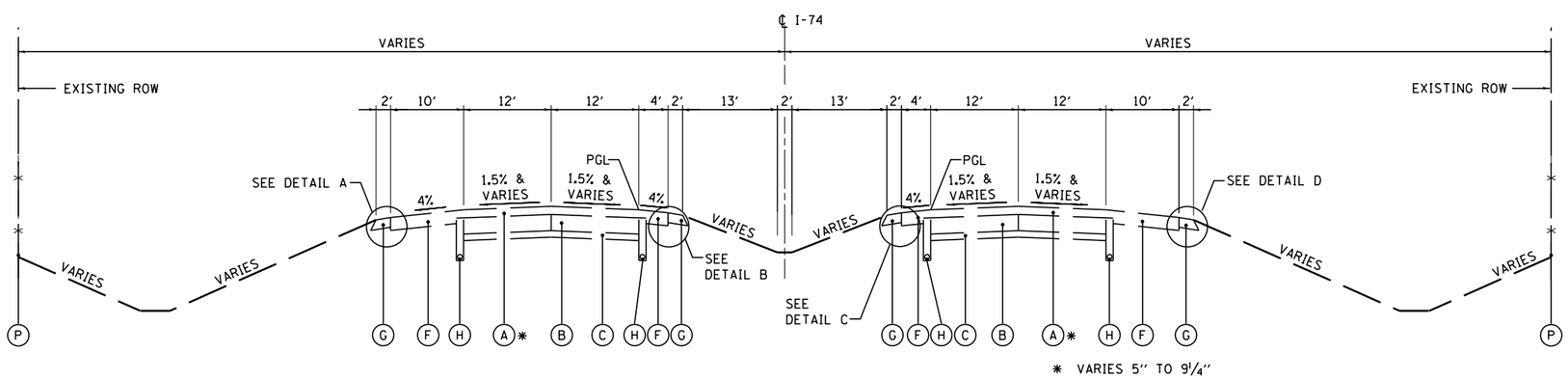

EXISTING TYPICAL SECTION (B)
I–74

STA 517+15.00 TO STA 587+24.00 (WB)
STA 515+20.00 TO STA 609+62.79 (EB)
BRIDGE OMISSION STA 539+03.20 TO STA 541+05.11 (FAI 74 OVER FAI 155)
BRIDGE OMISSION STA 549+13.82 TO STA 551+35.86 (FAI 74 OVER PENNSYLVANIA RAILROAD)
BRIDGE OMISSION STA 566+73.68 TO STA 570+35.66 (FAI 74 OVER JACKSON STREET)

FILE NAME =	DESIGNED - EJA	REVISED -	
...\D468620-sht_Ex_Typ_I-74_01.dgn	DRAWN - TMB	REVISED -	
USER NAME = tblank	CHECKED - JNR	REVISED -	
PLOT DATE = 7/17/2012	DATE - JULY 20, 2012	REVISED -	

benesch engineers · scientists · planners

STATE OF ILLINOIS
DEPARTMENT OF TRANSPORTATION

EXISTING TYPICAL SECTIONS
I–74

SCALE: NTS | SHEET NO. 1 OF 1 SHEETS | STA. | TO STA.

F.A.I. RTE.	SECTION	COUNTY	TOTAL SHEETS	SHEET NO.
•	90-[14R;(14HB-4,14,14HVB)BR]	TAZEWELL	2433	42

CONTRACT NO. 68620

ILLINOIS FED. AID PROJECT

• 74 & 155

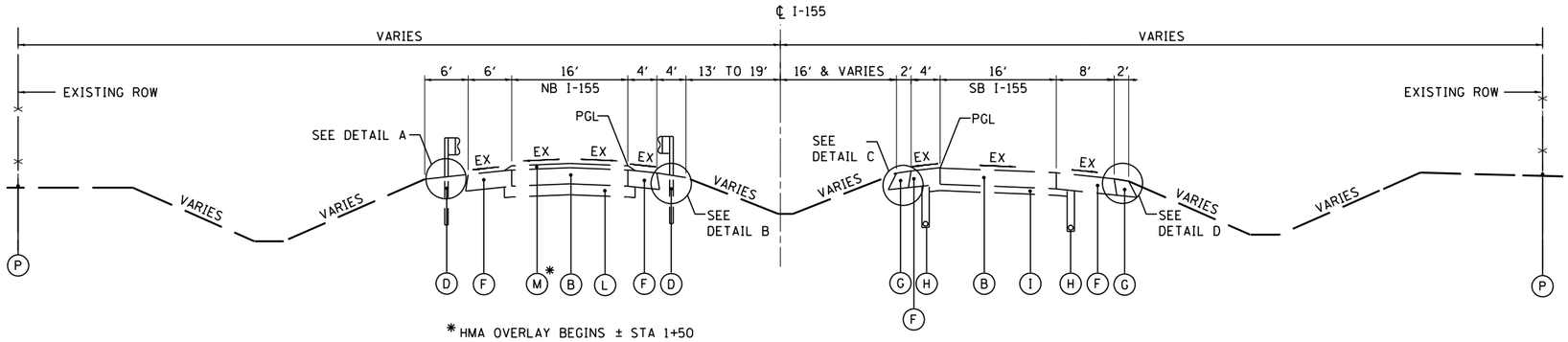

EXISTING TYPICAL SECTION (C)
I–155

NB I-155
STA 0+00.00 TO STA 12+48.00

SB I-155
STA 0+00.00 TO STA 2+20.00

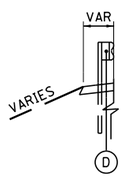

STA 0+00 TO STA 2+20
STA 6+80 TO STA 8+00

DETAIL A

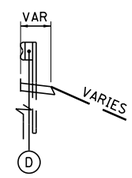

STA 0+00 TO STA 2+20
STA 11+40 TO STA 15+30

DETAIL B

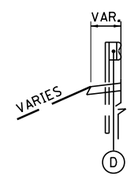

STA 0+00 TO STA 1+25

DETAIL C

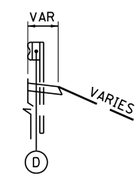

STA 9+00 TO STA 11+75

DETAIL D

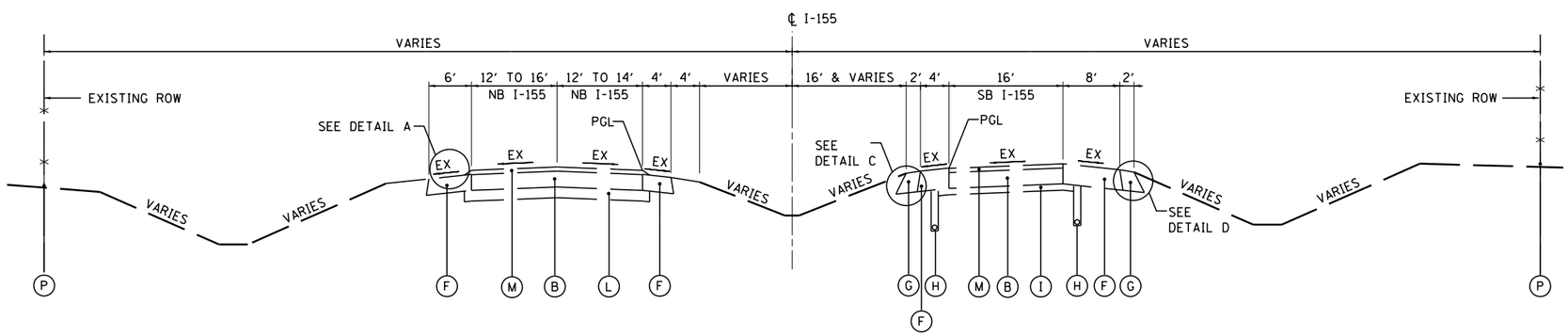

EXISTING TYPICAL SECTION (D)
I–155

NB I-155
STA 12+48.00 TO STA 15+00.00

SB I-155
STA 2+20.00 TO STA 17+40.00

EXISTING LEGEND:

- (A) EXISTING H.M.A. OVERLAY - VARIES
- (B) EXISTING P.C.C. PAVEMENT 9¼″ TO 10¼″
- (C) EXISTING SUB-BASE GRANULAR MATERIAL 3″ TO 6″
- (D) EXISTING GUARDRAIL
- (E) EXISTING P.C.C. SHOULDER 9¼″ TO 10¼″
- (F) EXISTING H.M.A. SHOULDER 8″ TO 10″
- (G) EXISTING AGGREGATE SHOULDER TYPE B 6″
- (H) EXISTING PIPE UNDERDRAIN 4″
- (I) EXISTING STABILIZED SUB-BASE, 4″
- (J) EXISTING SUB-BASE GRANULAR MATERIAL, TYPE A, 12″
- (K) EXISTING SUB-BASE GRANULAR MATERIAL, TYPE C
- (L) EXISTING SUB-BASE GRANULAR MATERIAL, TYPE A, 6″
- (M) EXISTING H.M.A. OVERLAY 2½″
- (N) EXISTING H.M.A. OVERLAY 5½″
- (O) EXISTING H.M.A. OVERLAY 5″
- (P) EXISTING CHAIN LINK FENCE

FILE NAME =	DESIGNED - AJP	REVISED -	
...\D468620-sht_Ex_Typ_I-155_01.dgn	DRAWN - TMB	REVISED -	
USER NAME = tblank	CHECKED - JNR	REVISED -	
PLOT DATE = 7/17/2012	DATE - JULY 20, 2012	REVISED -	

benesch
engineers · scientists · planners

STATE OF ILLINOIS
DEPARTMENT OF TRANSPORTATION

EXISTING TYPICAL SECTIONS
I–155

SCALE: NTS | SHEET NO. 1 OF 2 SHEETS | STA. | TO STA.

F.A.I. RTE.	SECTION	COUNTY	TOTAL SHEETS	SHEET NO.
•	90-(14R;(14HB-4,14,14HVB)BR)	TAZEWELL	2433	43
		CONTRACT NO. 68620		
	ILLINOIS	FED. AID PROJECT		

• 74 & 155

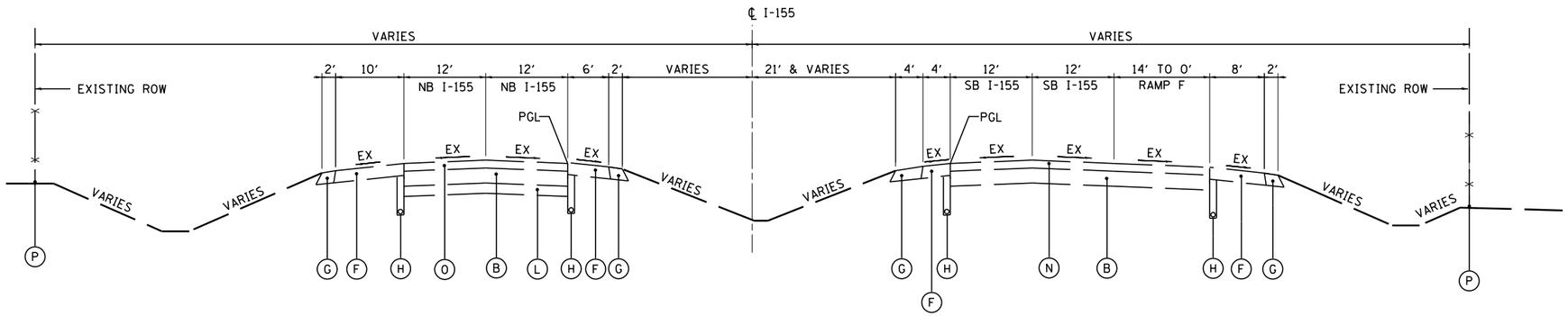

EXISTING TYPICAL SECTION (E)
I–155

NB I-155
STA 15+00.00 TO STA 24+50.00

SB I-155
STA 17+40.00 TO STA 27+50.00

EXISTING LEGEND:

- (A) EXISTING H.M.A. OVERLAY - VARIES
- (B) EXISTING P.C.C. PAVEMENT 9¼″ TO 10¼″
- (C) EXISTING SUB-BASE GRANULAR MATERIAL 3″ TO 6″
- (D) EXISTING GUARDRAIL
- (E) EXISTING P.C.C. SHOULDER 9¼″ TO 10¼″
- (F) EXISTING H.M.A. SHOULDER 8″ TO 10″
- (G) EXISTING AGGREGATE SHOULDER TYPE B 6″
- (H) EXISTING PIPE UNDERDRAIN 4″
- (I) EXISTING STABILIZED SUB-BASE, 4″
- (J) EXISTING SUB-BASE GRANULAR MATERIAL, TYPE A, 12″
- (K) EXISTING SUB-BASE GRANULAR MATERIAL, TYPE C
- (L) EXISTING SUB-BASE GRANULAR MATERIAL, TYPE A, 6″
- (M) EXISTING H.M.A. OVERLAY 2½″
- (N) EXISTING H.M.A. OVERLAY 5½″
- (O) EXISTING H.M.A. OVERLAY 5″
- (P) EXISTING CHAIN LINK FENCE

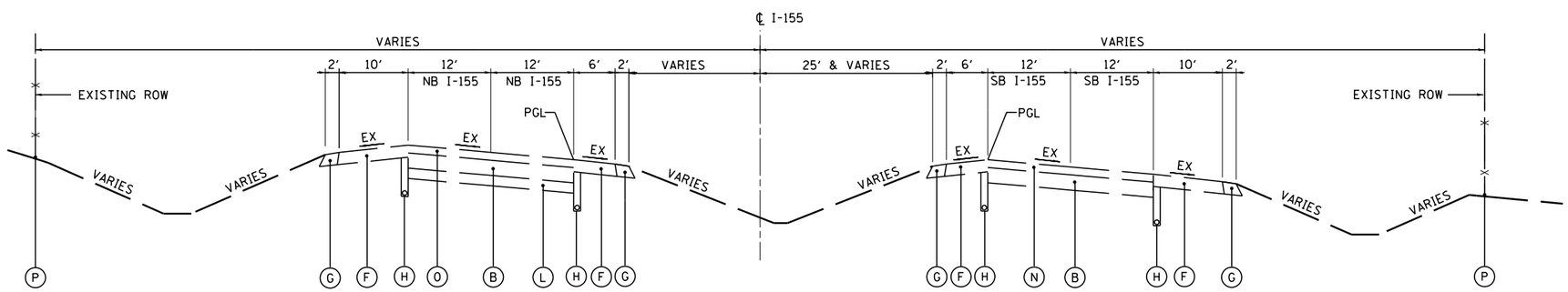

EXISTING TYPICAL SECTION (F)
I–155

NB I-155
STA 24+50.00 TO STA 35+90.00

SB I-155
STA 27+50.00 TO STA 35+90.00

FILE NAME =	DESIGNED - AJP	REVISED -	
...\D468620-sht_Ex_Typ_I-155_02.dgn	DRAWN - TMB	REVISED -	
USER NAME = tblank	CHECKED - JNR	REVISED -	
PLOT DATE = 7/17/2012	DATE - JULY 20, 2012	REVISED -	

benesch engineers · scientists · planners

STATE OF ILLINOIS
DEPARTMENT OF TRANSPORTATION

EXISTING TYPICAL SECTIONS
I–155

SCALE: NTS | SHEET NO. 2 OF 2 SHEETS | STA. | TO STA.

F.A.I. RTE.	SECTION	COUNTY	TOTAL SHEETS	SHEET NO.
•	90-[14R;(14HB-4,14,14HVB)BR]	TAZEWELL	2433	44

CONTRACT NO. 68620

ILLINOIS | FED. AID PROJECT

• 74 & 155

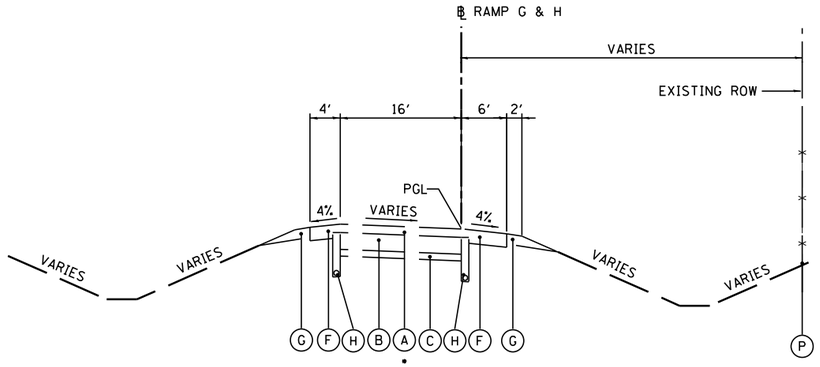

EXISTING TYPICAL SECTION
I–155 /I–74 RAMPS E, G & H (G)

• VARIES 5 1/2'' TO 8 1/2''
RAMP E STA 201+40 TO STA 217+85
RAMP G STA 12+30 TO STA 30+12
RAMP H STA 100+00 TO STA 125+13

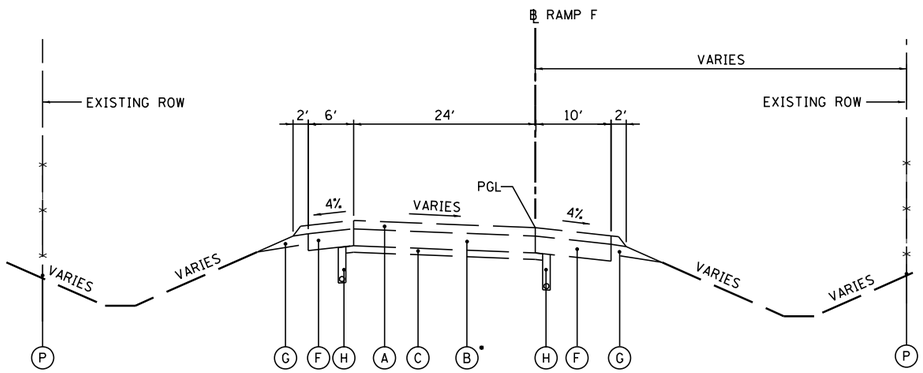

EXISTING TYPICAL SECTION
I–155 /I–74 RAMP F (H)

• CRPCC FOR EXISTING RAMP F STA 307+08 TO STA 346+60

EXISTING LEGEND:

- (A) EXISTING H.M.A. OVERLAY - VARIES
- (B) EXISTING P.C.C. PAVEMENT 9¼'' TO 10¼''
- (C) EXISTING SUB-BASE GRANULAR MATERIAL 3'' TO 6''
- (D) EXISTING GUARDRAIL
- (E) EXISTING P.C.C. SHOULDER 9¼'' TO 10¼''
- (F) EXISTING H.M.A. SHOULDER 8'' TO 10''
- (G) EXISTING AGGREGATE SHOULDER TYPE B 6''
- (H) EXISTING PIPE UNDERDRAIN 4''
- (I) EXISTING STABILIZED SUB-BASE, 4''
- (J) EXISTING SUB-BASE GRANULAR MATERIAL, TYPE A, 12''
- (K) EXISTING SUB-BASE GRANULAR MATERIAL, TYPE C
- (L) EXISTING SUB-BASE GRANULAR MATERIAL, TYPE A, 6''
- (M) EXISTING H.M.A. OVERLAY 2½''
- (N) EXISTING H.M.A. OVERLAY 5½''
- (O) EXISTING H.M.A. OVERLAY 5''
- (P) EXISTING CHAIN LINK FENCE

FILE NAME =	DESIGNED - AJP	REVISED -	
...\D468620-sht_Ex_Typ_I-74_I-155_Ramps_EFGH.dgn	DRAWN - TMB	REVISED -	
USER NAME = tblank	CHECKED - JNR	REVISED -	
PLOT DATE = 7/17/2012	DATE - JULY 20, 2012	REVISED -	

benesch engineers · scientists · planners

STATE OF ILLINOIS
DEPARTMENT OF TRANSPORTATION

EXISTING TYPICAL SECTIONS
I–74 & I–155 RAMPS E, F, G & H

SCALE: NTS | SHEET NO. 1 OF 1 SHEETS | STA. | TO STA.

F.A.I. RTE.	SECTION	COUNTY	TOTAL SHEETS	SHEET NO.
•	90-[14R;(14HB-4,14,14HVB)BR]	TAZEWELL	2433	45

CONTRACT NO. 68620

ILLINOIS | FED. AID PROJECT

• 74 & 155

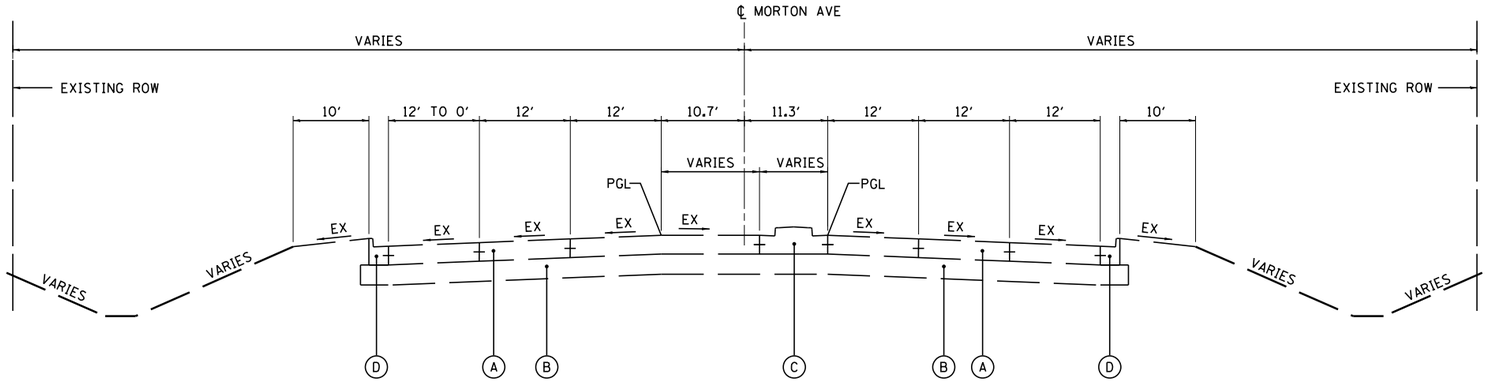

EXISTING TYPICAL SECTION
MORTON AVE (I)
STA 26+94.00 TO STA 28+50.00

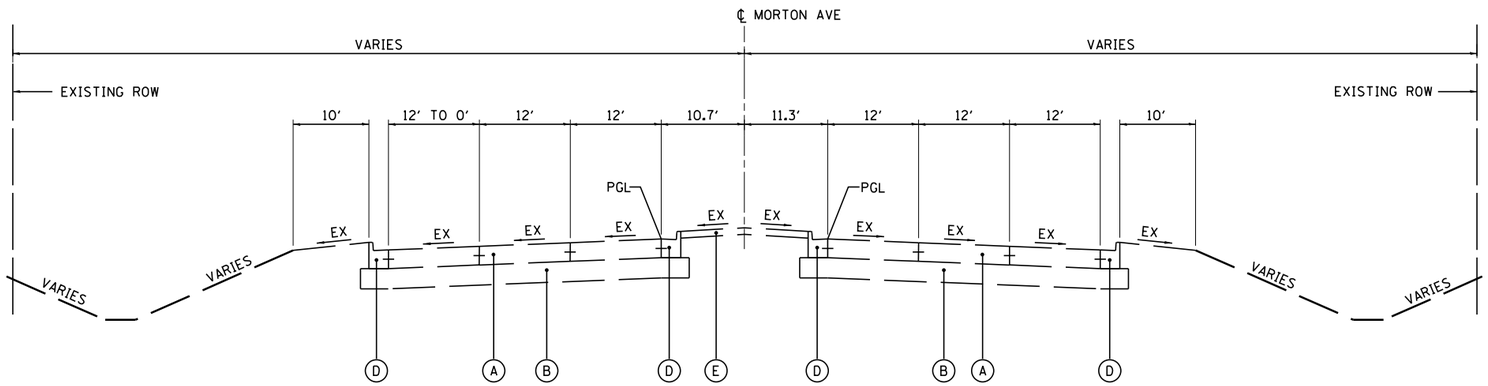

EXISTING TYPICAL SECTION
MORTON AVE (J)
STA 28+50.00 TO STA 31+29.97

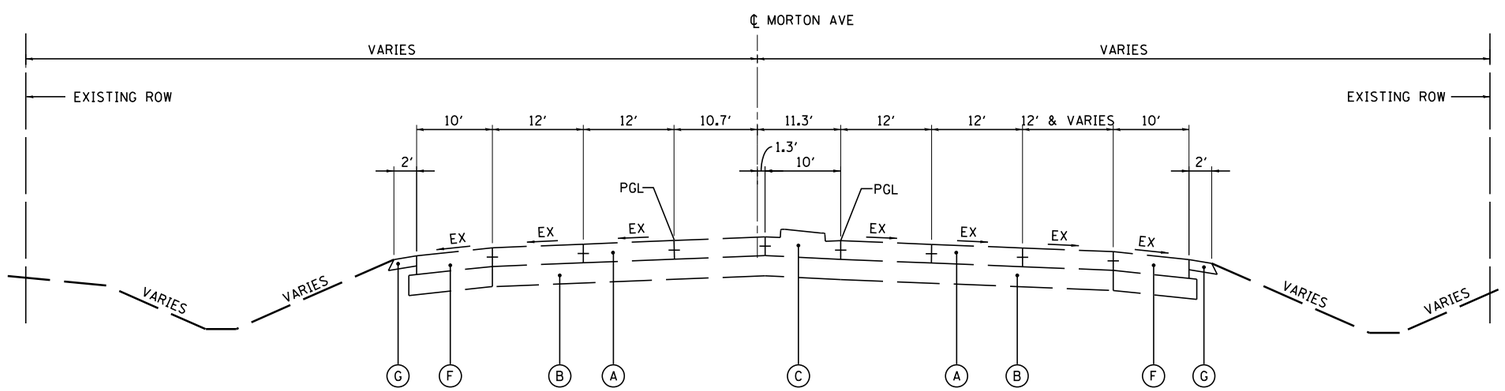

EXISTING TYPICAL SECTION
MORTON AVE (K)
STA 31+29.97 TO STA 33+38.82

EXISTING LEGEND:

- (A) EXISTING P.C.C. PAVEMENT 9 1/4"
- (B) EXISTING SUB-BASE GRANULAR MATERIAL, TYPE A, 12"
- (C) EXISTING CONCRETE MEDIAN SB-6.24
- (D) EXISTING COMBINATION P.C.C. CURB & GUTTER, TYPE B-6.24
- (E) EXISTING MEDIAN SURFACE 4"
- (F) EXISTING P.C.C. SHOULDER 9 1/4"
- (G) EXISTING AGGREGATE SHOULDER TYPE B 6"
- (H) EXISTING CHAIN LINK FENCE

FILE NAME =	DESIGNED - I S	REVISED -	
...\D468620-sht_Ex_Typ_Morton_01.dgn	DRAWN - TMB	REVISED -	
USER NAME = tblank	CHECKED - JNR	REVISED -	
PLOT DATE = 7/17/2012	DATE - JULY 20, 2012	REVISED -	

benesch
engineers · scientists · planners

STATE OF ILLINOIS
DEPARTMENT OF TRANSPORTATION

EXISTING TYPICAL SECTIONS
MORTON AVE

SCALE: NTS | SHEET NO. 1 OF 4 SHEETS | STA. | TO STA.

F.A.I. RTE.	SECTION	COUNTY	TOTAL SHEETS	SHEET NO.
•	90-(14R;(14HB-4,14,14HVB)BR)	TAZEWELL	2433	46

CONTRACT NO. 68620
ILLINOIS FED. AID PROJECT

• 74 & 155

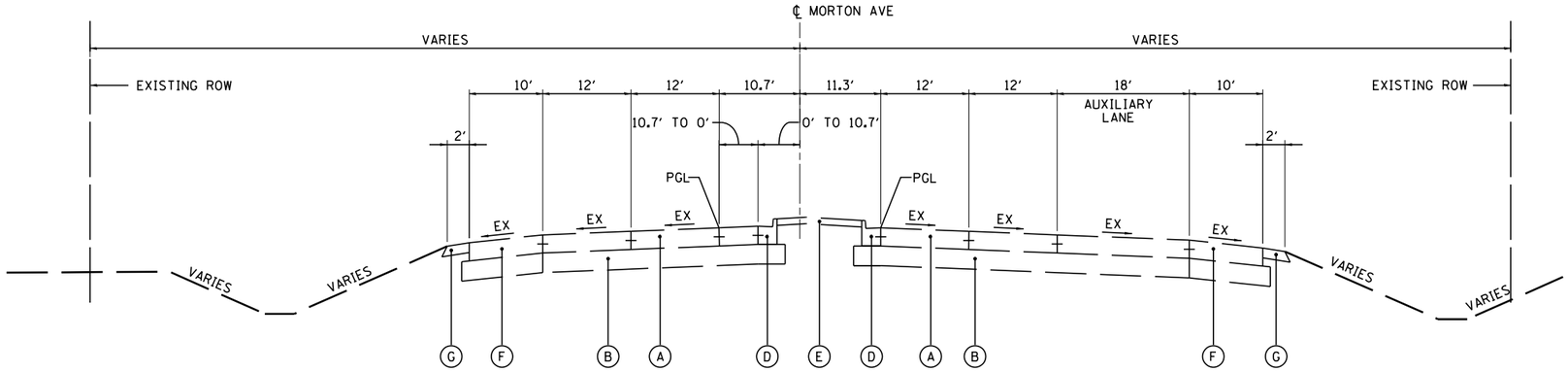

EXISTING TYPICAL SECTION
MORTON AVE (L)

STA 33+38.82 TO STA 35+16.27
BRIDGE OMISSION STA 35+16.27 TO STA 37+70.27 (MORTON AVE OVER FAI 74)

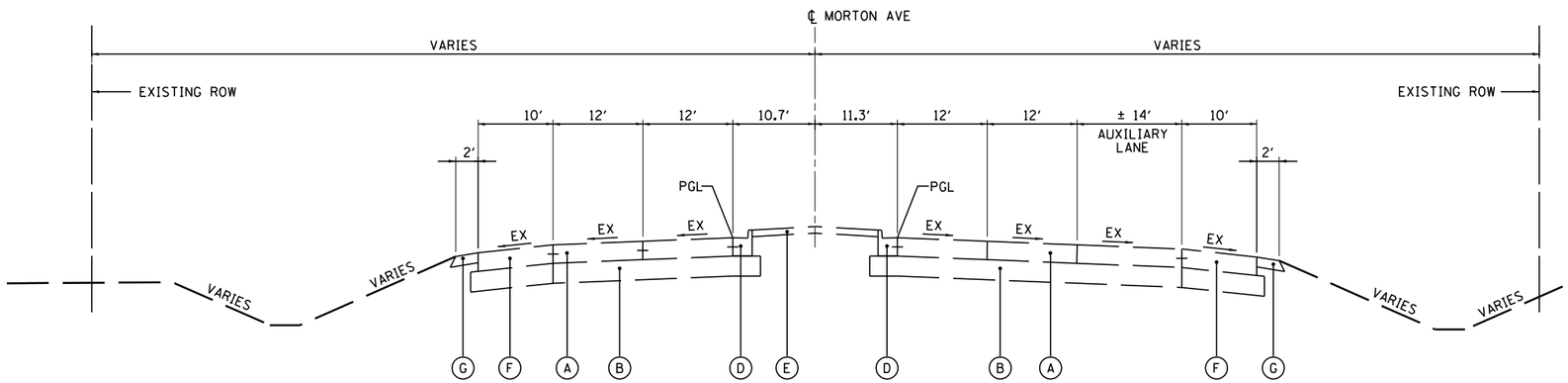

EXISTING TYPICAL SECTION
MORTON AVE (M)

STA 37+70.27 TO STA 37+93.39

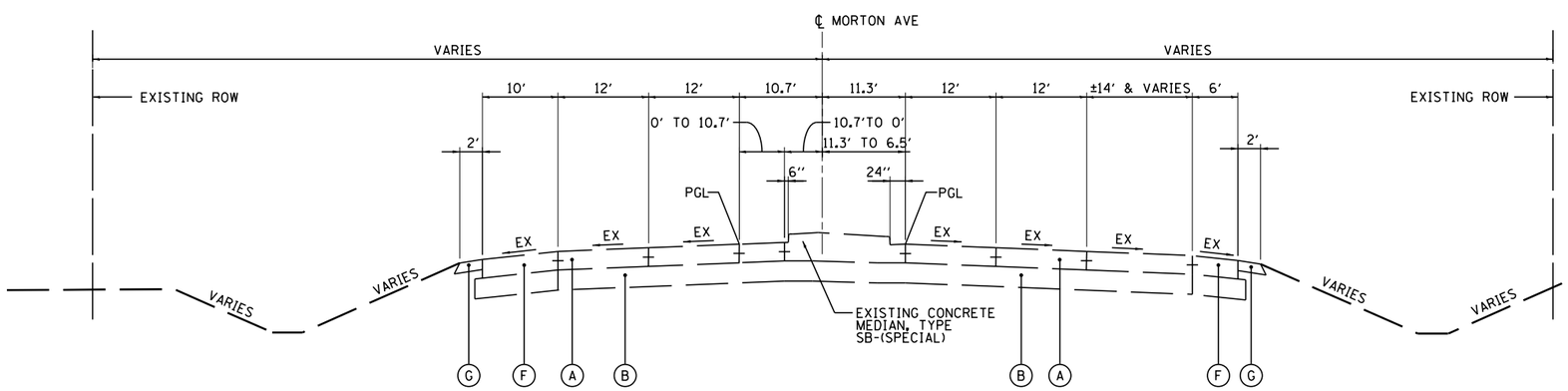

EXISTING TYPICAL SECTION
MORTON AVE (N)

STA 37+93.39 TO STA 39+55.00

EXISTING LEGEND:

- (A) EXISTING P.C.C. PAVEMENT 9 1/4″
- (B) EXISTING SUB-BASE GRANULAR MATERIAL, TYPE A, 12″
- (C) EXISTING CONCRETE MEDIAN SB-6.24
- (D) EXISTING COMBINATION P.C.C. CURB & GUTTER, TYPE B-6.24
- (E) EXISTING MEDIAN SURFACE 4″
- (F) EXISTING P.C.C. SHOULDER 9 1/4″
- (G) EXISTING AGGREGATE SHOULDER TYPE B 6″
- (H) EXISTING CHAIN LINK FENCE

FILE NAME =	DESIGNED - I S	REVISED -
...\D468620-sht_Ex_Typ_Morton_02.dgn	DRAWN - TMB	REVISED -
USER NAME = tblank	CHECKED - JNR	REVISED -
PLOT DATE = 7/17/2012	DATE - JULY 20, 2012	REVISED -

benesch engineers · scientists · planners

STATE OF ILLINOIS
DEPARTMENT OF TRANSPORTATION

EXISTING TYPICAL SECTIONS
MORTON AVE

SCALE: NTS | SHEET NO. 2 OF 4 SHEETS | STA. | TO STA.

F.A.I. RTE.	SECTION	COUNTY	TOTAL SHEETS	SHEET NO.
•	90-[14R;(14HB-4,14,14HVB)BR]	TAZEWELL	2433	47

CONTRACT NO. 68620

ILLINOIS FED. AID PROJECT

• 74 & 155

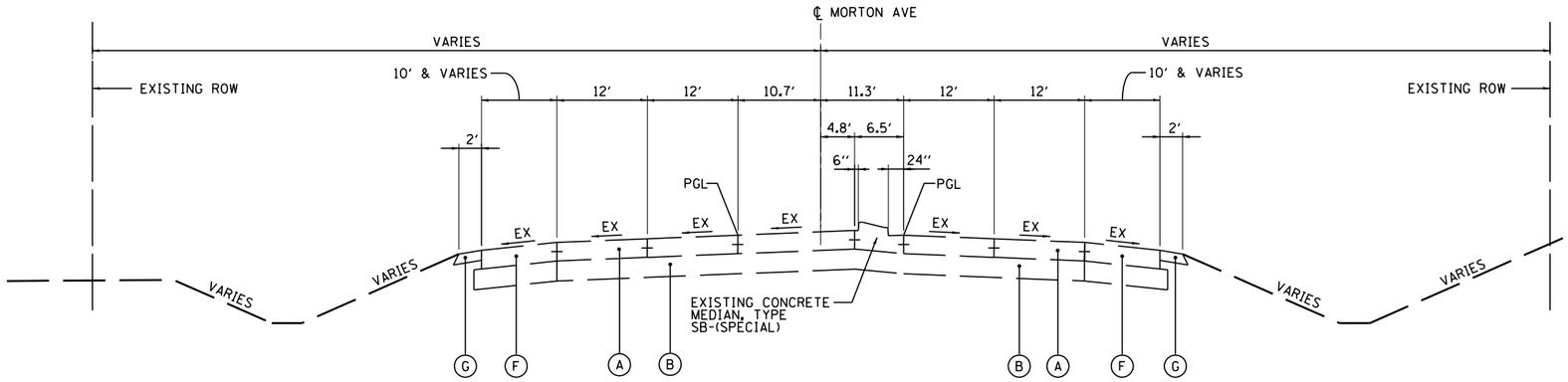

EXISTING TYPICAL SECTION
MORTON AVE (O)

STA 39+55.00 TO STA 42+00.00

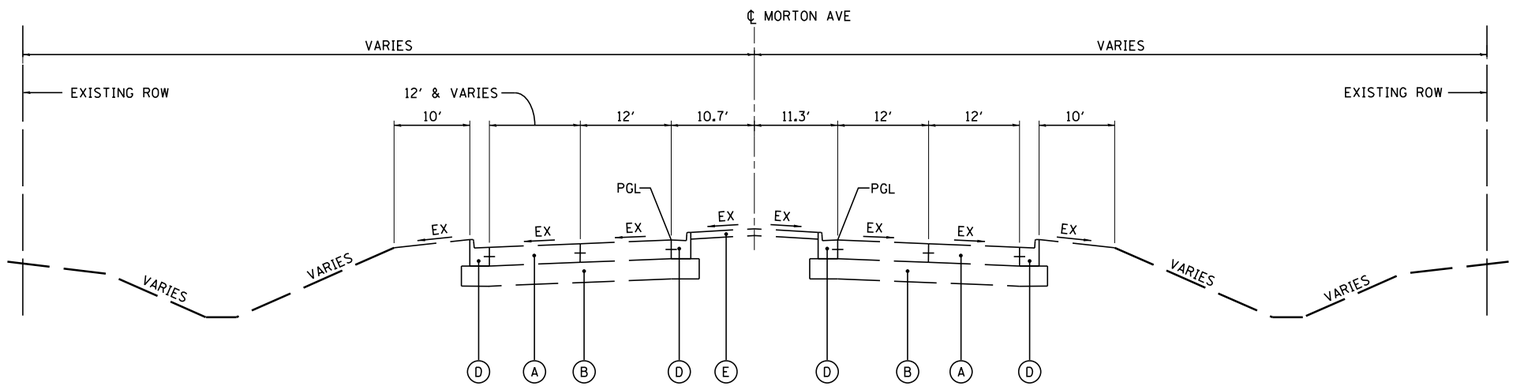

EXISTING TYPICAL SECTION
MORTON AVE (P)

STA 42+00.00 TO STA 45+35.39

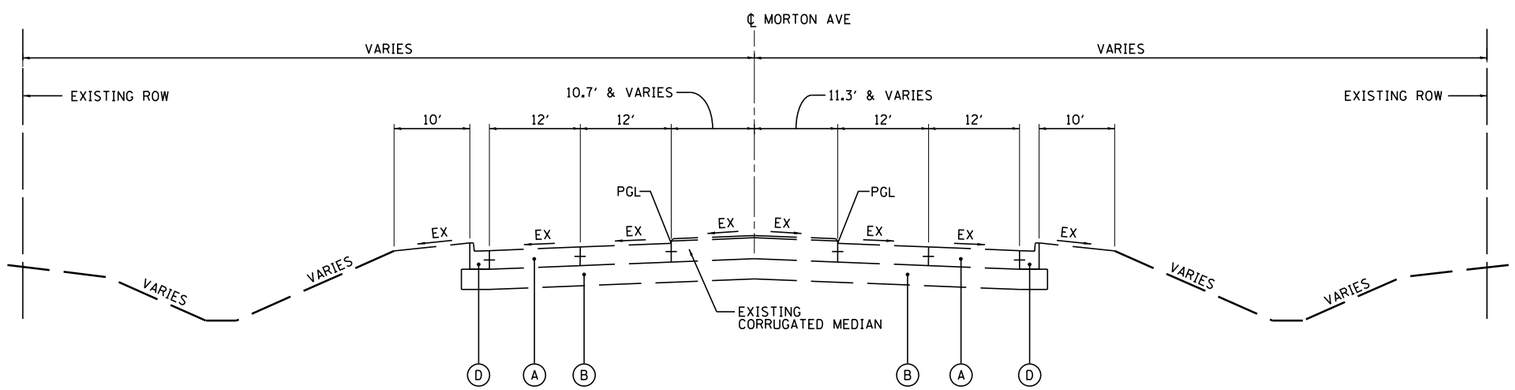

EXISTING TYPICAL SECTION
MORTON AVE (Q)

STA 45+35.39 TO STA 49+31.32

EXISTING LEGEND:

- (A) EXISTING P.C.C. PAVEMENT 9 1/4"
- (B) EXISTING SUB-BASE GRANULAR MATERIAL, TYPE A, 12"
- (C) EXISTING CONCRETE MEDIAN SB-6.24
- (D) EXISTING COMBINATION P.C.C. CURB & GUTTER, TYPE B-6.24
- (E) EXISTING MEDIAN SURFACE 4"
- (F) EXISTING P.C.C. SHOULDER 9 1/4"
- (G) EXISTING AGGREGATE SHOULDER TYPE B 6"
- (H) EXISTING CHAIN LINK FENCE

FILE NAME =	DESIGNED - I S	REVISED -	
...\D468620-sht_Ex_Typ_Morton_03.dgn	DRAWN - TMB	REVISED -	
USER NAME = tblank	CHECKED - JNR	REVISED -	
PLOT DATE = 7/17/2012	DATE - JULY 20, 2012	REVISED -	

benesch engineers · scientists · planners

STATE OF ILLINOIS
DEPARTMENT OF TRANSPORTATION

EXISTING TYPICAL SECTIONS
MORTON AVE

SCALE: NTS | SHEET NO. 3 OF 4 SHEETS | STA. | TO STA.

F.A.I. RTE.	SECTION	COUNTY	TOTAL SHEETS	SHEET NO.
•	90-[14R;(14HB-4,14,14HVB)BR]	TAZEWELL	2433	48

CONTRACT NO. 68620

ILLINOIS FED. AID PROJECT

• 74 & 155

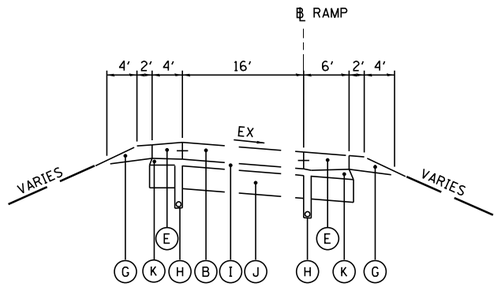

EXISTING TYPICAL SECTION
I-74 /MORTON AVE RAMP (R)

RAMP A STA 100+35 TO STA 118+15
RAMP B STA 202+70 TO STA 222+70
RAMP C STA 229+20 TO STA 319+80
RAMP D STA 401+50 TO STA 418+50
RAMP E STA 502+40 TO STA 519+00
RAMP F STA 602+72 TO STA 618+50

EXISTING LEGEND:

- (A) EXISTING H.M.A. OVERLAY - VARIES
- (B) EXISTING P.C.C. PAVEMENT 9¼" TO 10¼"
- (C) EXISTING SUB-BASE GRANULAR MATERIAL 3" TO 6"
- (D) EXISTING GUARDRAIL
- (E) EXISTING P.C.C. SHOULDER 9¼" TO 10¼"
- (F) EXISTING H.M.A. SHOULDER 8" TO 10"
- (G) EXISTING AGGREGATE SHOULDER TYPE B 6"
- (H) EXISTING PIPE UNDERDRAIN 4"
- (I) EXISTING STABILIZED SUB-BASE, 4"
- (J) EXISTING SUB-BASE GRANULAR MATERIAL, TYPE A, 12"
- (K) EXISTING SUB-BASE GRANULAR MATERIAL, TYPE C
- (L) EXISTING SUB-BASE GRANULAR MATERIAL, TYPE A, 6"
- (M) EXISTING H.M.A. OVERLAY 2½"
- (N) EXISTING H.M.A. OVERLAY 5½"
- (O) EXISTING H.M.A. OVERLAY 5"
- (P) EXISTING CHAIN LINK FENCE

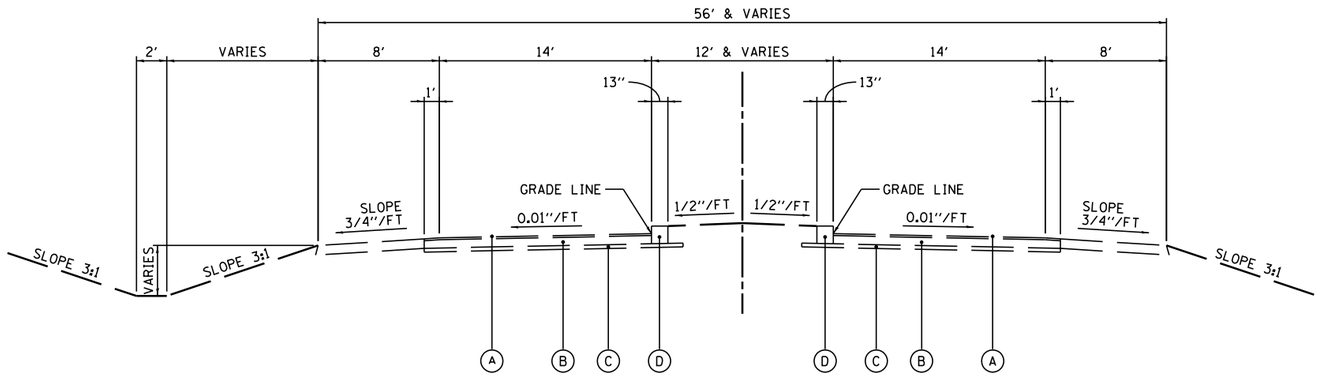

EXISTING TYPICAL SECTION
JEFFERSON STREET (S)

STA 18+71.86 TO STA 22+15
STA 25+00 TO STA 28+50
UNDERPASS OMISSION STA 22+15 TO STA 25+00

EXISTING LEGEND:

- (A) EXISTING BITUMINOUS SURFACE TREATMENT
- (B) EXISTING GRAVEL OR CRUSHED STONE BASE COURSE, TYPE B, 8"
- (C) EXISTING SUB-BASE GRANULAR MATERIAL 3" TO 6"
- (D) EXISTING CURB & GUTTER
- (E) EXISTING CHAIN LINK FENCE

FILE NAME =	DESIGNED - I S	REVISED -	
...\D468620-sht_Ex_Typ_JeffJack_01.dgn	DRAWN - TMB	REVISED -	
USER NAME = tblank	CHECKED - JNR	REVISED -	
PLOT DATE = 7/17/2012	DATE - JULY 20, 2012	REVISED -	

benesch
engineers · scientists · planners

STATE OF ILLINOIS
DEPARTMENT OF TRANSPORTATION

EXISTING TYPICAL SECTIONS
JEFFERSON ST

SCALE: NTS | SHEET NO. 1 OF 1 SHEETS | STA. | TO STA.

F.A.I. RTE.	SECTION	COUNTY	TOTAL SHEETS	SHEET NO.
•	90-[14R;(14HB-4,14,14HVB)BR]	TAZEWELL	2433	50

CONTRACT NO. 68620

ILLINOIS FED. AID PROJECT

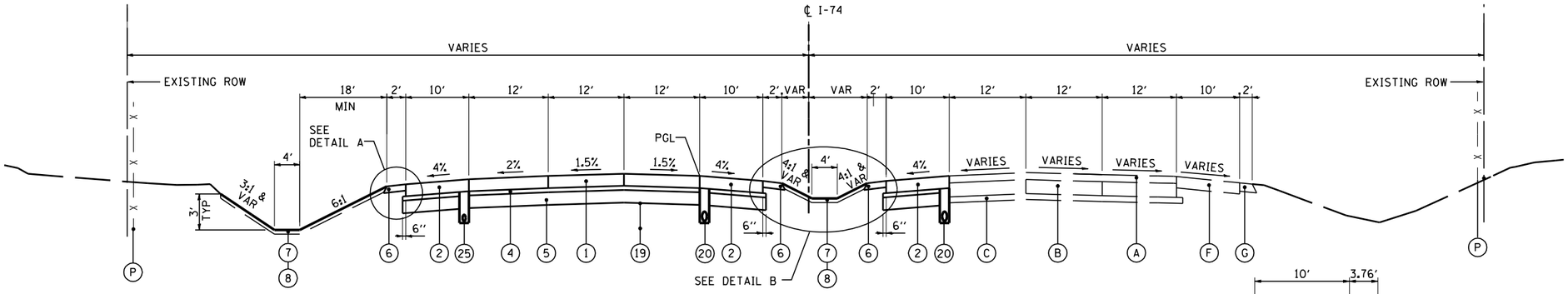

PROPOSED / EXISTING TYPICAL SECTION 1
I-74

STA 464+54.67 TO STA 473+00.00

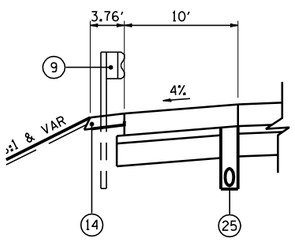

DETAIL A

STA 465+77.83 TO STA 469+58.14
STA 482+57.07 TO STA 484+24.86

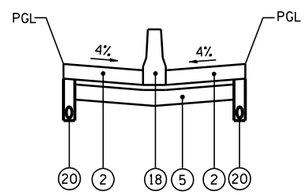

DETAIL B

STA 467+07.16 TO STA 473+00.00

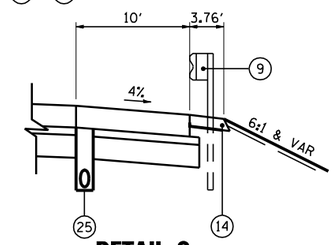

DETAIL C

STA 482+66.88 TO STA 487+72.16

PAVEMENT DESIGN I-74

STRUCTURAL DESIGN TRAFFIC: Year 2024

PV = 47,366 SU = 1,361 SU = 6,594

ROAD CLASSIFICATION CLASS I

PERCENT OF STRUCTURAL DESIGN TRAFFIC IN DESIGN LANE:

P = 20% S = 40% M = 40%

TRAFFIC FACTOR: Actual TF = 38.33 AC Type = N/A

Minimum TF = 8.93

PG GRADE: Binder = N/A Surface = N/A

SUBGRADE SUPPORT RATING:

SSR = POOR (Sta. 464+54.59 to 609+62.79)

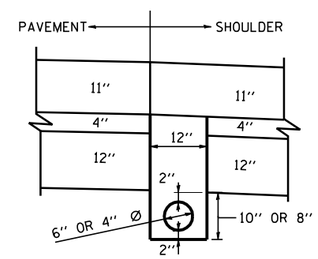

UNDERDRAIN DETAIL

EXISTING LEGEND:

- (A) EXISTING H.M.A. OVERLAY - VARIES
- (B) EXISTING P.C.C. PAVEMENT 9¼" TO 10¼"
- (C) EXISTING SUB-BASE GRANULAR MATERIAL 3" TO 6"
- (D) EXISTING GUARDRAIL
- (E) EXISTING P.C.C. SHOULDER 9¼" TO 10¼"
- (F) EXISTING H.M.A. SHOULDER 8" TO 10"
- (G) EXISTING AGGREGATE SHOULDER TYPE B 6"
- (H) EXISTING PIPE UNDERDRAIN 4"
- (I) EXISTING STABILIZED SUB-BASE, 4"
- (J) EXISTING SUB-BASE GRANULAR MATERIAL, TYPE A, 12"
- (K) EXISTING SUB-BASE GRANULAR MATERIAL, TYPE C
- (L) EXISTING SUB-BASE GRANULAR MATERIAL, TYPE A, 6"
- (M) EXISTING H.M.A. OVERLAY 2½"
- (N) EXISTING H.M.A. OVERLAY 5½"
- (O) EXISTING H.M.A. OVERLAY 5"
- (P) EXISTING CHAIN LINK FENCE

PROPOSED LEGEND:

- (1) CONTINUOUSLY REINFORCED PORTLAND CEMENT CONCRETE PAVEMENT 11"
- (2) PORTLAND CEMENT CONCRETE SHOULDERS 11"
- (3) CONCRETE BARRIER, DOUBLE FACE, 42 INCH HEIGHT
- (4) STABILIZED SUBBASE - HOT-MIX ASPHALT, 4"
- (5) AGGREGATE SUBGRADE IMPROVEMENT 12"
- (6) AGGREGATE SHOULDERS, TYPE B 6"
- (7) TOPSOIL EXCAVATION AND PLACEMENT, 4"
- (8) SEEDING, CLASS _ (SEE EROSION AND SEDIMENT CONTROL PLANS)
- (9) STEEL PLATE BEAM GUARDRAIL, TYPE A, 6 FOOT POSTS
- (10) PORTLAND CEMENT CONCRETE PAVEMENT 10 1/4" (JOINTED)
- (11) PORTLAND CEMENT CONCRETE PAVEMENT 10" (JOINTED)
- (12) PORTLAND CEMENT CONCRETE SHOULDERS 10 1/4"
- (13) PORTLAND CEMENT CONCRETE SHOULDERS 10"
- (14) GUARDRAIL AGGREGATE EROSION CONTROL
- (15) CONCRETE BARRIER, SINGLE FACE, 42 INCH HEIGHT
- (16) COMBINATION CONCRETE CURB & GUTTER, TYPE B-6.24
- (17) NOT USED
- (18) CONCRETE BARRIER, DOUBLE FACE, 48 INCH HEIGHT
- (19) GEOTECHNICAL FABRIC FOR GROUND STABILIZATION
- (20) PIPE UNDERDRAINS 6"
- (21) CHAIN LINK FENCE, 4'
- (22) DRAINAGE STRUCTURE - TYPE 4, TY20 GRATE
- (23) STORM SEWER (SIZE VARIES)
- (24) LIGHT POLE FOUNDATION (SEE LIGHTING PLANS)
- (25) PIPE UNDERDRAINS 4"

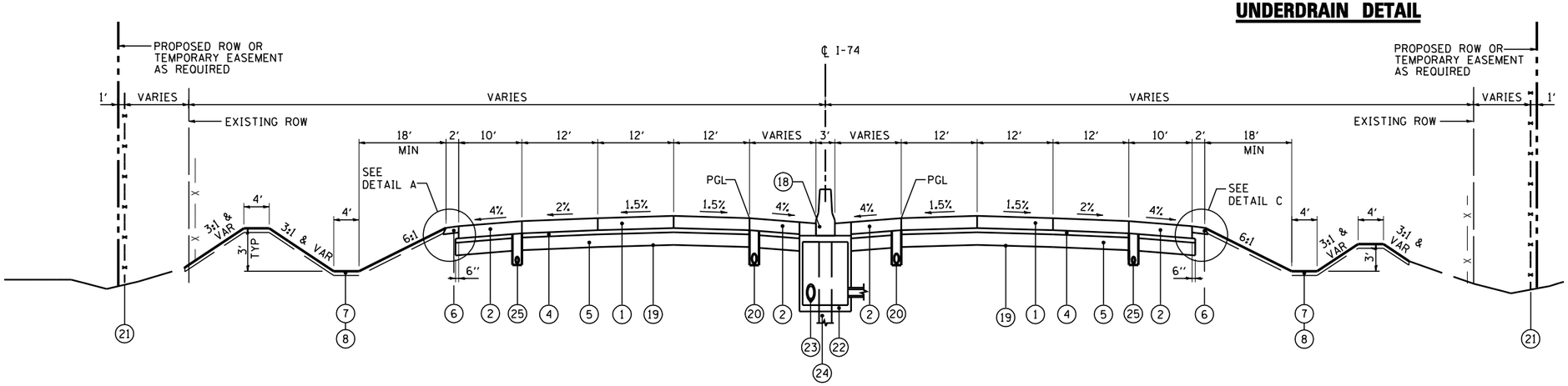

PROPOSED TYPICAL SECTION 2
I-74

STA 473+00.00 TO STA 489+25.32

NOTE:
SEE CROSS SECTIONS FOR DETAILED GRADING

FILE NAME =	DESIGNED - EJA	REVISED -
...\D468620-sht_Pr_Typ_I-74_01.dgn	DRAWN - TMB	REVISED -
USER NAME = jreambillo	CHECKED - JNR	REVISED -
PLOT DATE = 7/26/2012	DATE - JULY 20, 2012	REVISED -

benesch engineers · scientists · planners

STATE OF ILLINOIS
DEPARTMENT OF TRANSPORTATION

PROPOSED TYPICAL SECTIONS
I-74

SCALE: NTS | SHEET NO. 1 OF 4 SHEETS | STA. TO STA.

F.A.I. RTE.	SECTION	COUNTY	TOTAL SHEETS	SHEET NO.
•	90-(14R;(14HB-4,14,14HVB)BR)	TAZEWELL	2433	51

CONTRACT NO. 68620

ILLINOIS FED. AID PROJECT

• 74 & 155

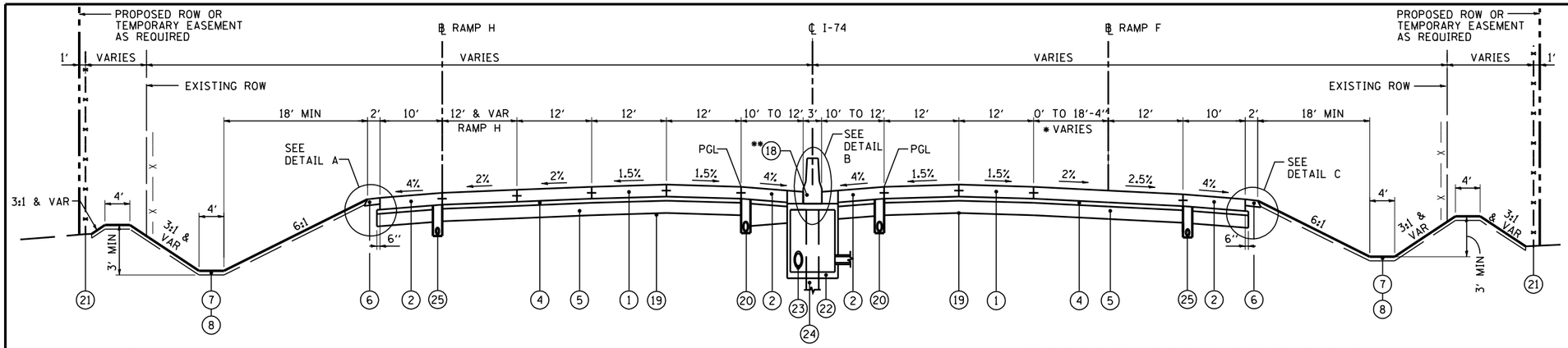

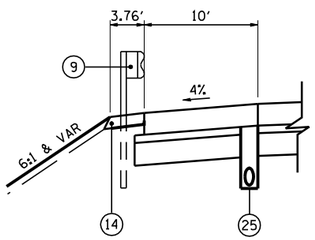

DETAIL A

STA 489+25.09 TO STA 496+67.77
STA 508+06.50 TO STA 510+11.79
STA 541+16.88 TO STA 543+63.51

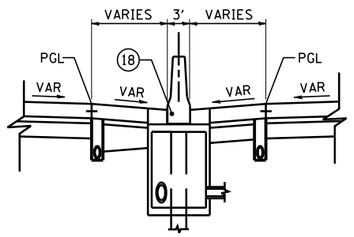

DETAIL B

STA 521+00.00 TO STA 561+00

PROPOSED TYPICAL SECTION I-74 (3)

STA 489+25.32 TO STA 523+04.86

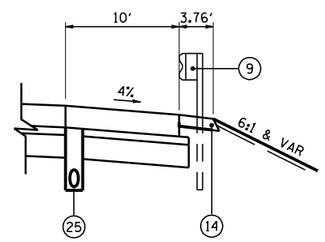

DETAIL C

STA 496+89.93 TO STA 498+57.70
STA 513+79.47 TO STA 515+59.69

* DEVELOPMENT OF RAMP F CONTINUES TO STA 524+76.25

** FROM STA 490+00.00 TO STA 517+80.78 BASE CONSTRUCTED SEPARATELY, SEE DETAIL.

PAVEMENT DESIGN I-74

STRUCTURAL DESIGN TRAFFIC: Year 2024

PV = 47,366 SU = 1,361 SU = 6,594

ROAD CLASSIFICATION CLASS I

PERCENT OF STRUCTURAL DESIGN TRAFFIC IN DESIGN LANE:

P = 20% S = 40% M = 40%

TRAFFIC FACTOR: Actual TF = 38.33 AC Type = N/A

Minimum TF = 8.93

PG GRADE: Binder = N/A Surface = N/A

SUBGRADE SUPPORT RATING:

SSR = POOR (Sta. 464+54.59 to 609+62.79)

PROPOSED LEGEND:

1. CONTINUOUSLY REINFORCED PORTLAND CEMENT CONCRETE PAVEMENT 11"
2. PORTLAND CEMENT CONCRETE SHOULDERS 11"
3. CONCRETE BARRIER, DOUBLE FACE, 42 INCH HEIGHT
4. STABILIZED SUBBASE - HOT-MIX ASPHALT, 4"
5. AGGREGATE SUBGRADE IMPROVEMENT 12"
6. AGGREGATE SHOULDERS, TYPE B 6"
7. TOPSOIL EXCAVATION AND PLACEMENT, 4"
8. SEEDING, CLASS _ (SEE EROSION AND SEDIMENT CONTROL PLANS)
9. STEEL PLATE BEAM GUARDRAIL, TYPE A, 6 FOOT POSTS
10. PORTLAND CEMENT CONCRETE PAVEMENT 10 1/4" (JOINTED)
11. PORTLAND CEMENT CONCRETE PAVEMENT 10" (JOINTED)
12. PORTLAND CEMENT CONCRETE SHOULDERS 10 1/4"
13. PORTLAND CEMENT CONCRETE SHOULDERS 10"
14. GUARDRAIL AGGREGATE EROSION CONTROL
15. CONCRETE BARRIER, SINGLE FACE, 42 INCH HEIGHT
16. COMBINATION CONCRETE CURB & GUTTER, TYPE B-6.24
17. NOT USED
18. CONCRETE BARRIER, DOUBLE FACE, 48 INCH HEIGHT
19. GEOTECHNICAL FABRIC FOR GROUND STABILIZATION
20. PIPE UNDERDRAINS 6"
21. CHAIN LINK FENCE, 4'
22. DRAINAGE STRUCTURE - TYPE 4, TY20 GRATE
23. STORM SEWER (SIZE VARIES)
24. LIGHT POLE FOUNDATION (SEE LIGHTING PLANS)
25. PIPE UNDERDRAINS 4"

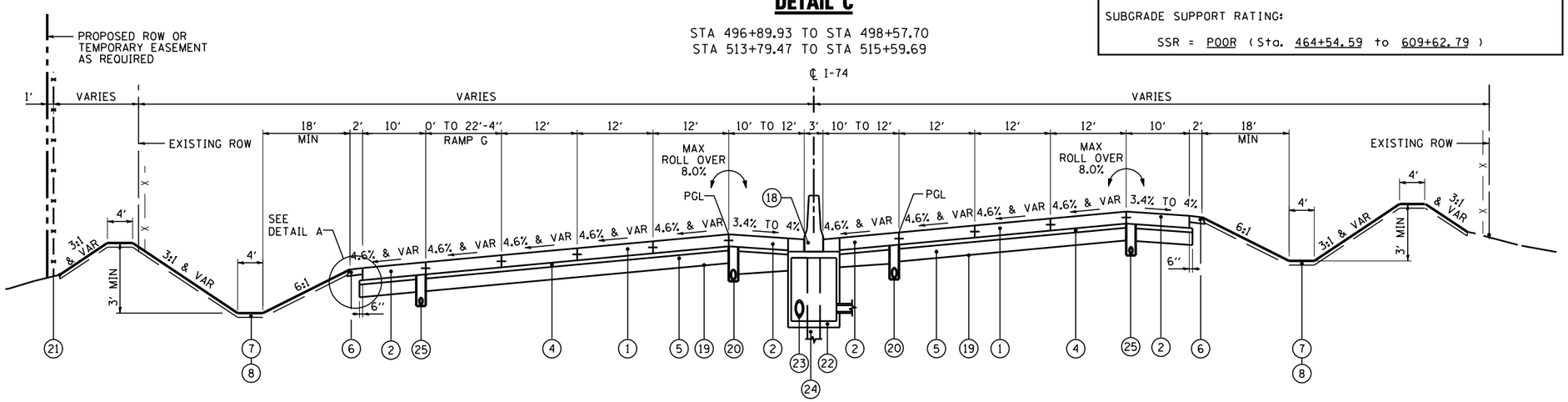

PROPOSED TYPICAL SECTION I-74 (4)

STA 523+04.86 TO STA 548+84.59
BEGIN TR 2.0% LANE AT PC STA 519+25.00
BEGIN TR 1.5% LANE AT PC STA 519+62.50
BEGIN SE RUNOFF AT PC STA 520+75.00
END SE RUNOFF AT PC STA 524+20.00
BEGIN SE RUNOFF AT PT STA 547+94.00
END SE RUNOFF AT PT STA 550+70.00
END TR 1.5% LANE AT PT STA 551+60.00
END TR 2.0% LANE AT PT STA 551+90.00

NOTE:
SUPER ELEVATION TRANSITION STATIONS SHOWN ARE FOR EB I-74. SEE DETAIL SHEET FOR FULL SE TRANSITION DETAILS.

NOTE:
SEE CROSS SECTIONS FOR DETAILED GRADING

FILE NAME =	DESIGNED - EJA	REVISED -	
...\D468620-sht_Pr_Typ_I-74_02.dgn	DRAWN - TMB	REVISED -	
USER NAME = jreambillo	CHECKED - JNR	REVISED -	
PLOT DATE = 7/26/2012	DATE - JULY 20, 2012	REVISED -	

benesch engineers · scientists · planners

STATE OF ILLINOIS
DEPARTMENT OF TRANSPORTATION

PROPOSED TYPICAL SECTIONS
I-74

SCALE: NTS | SHEET NO. 2 OF 4 SHEETS | STA. TO STA.

F.A.I. RTE.	SECTION	COUNTY	TOTAL SHEETS	SHEET NO.
•	90-(14R;(14HB-4,14,14HVB)BR)	TAZEWELL	2433	52

CONTRACT NO. 68620

ILLINOIS FED. AID PROJECT

• 74 & 155

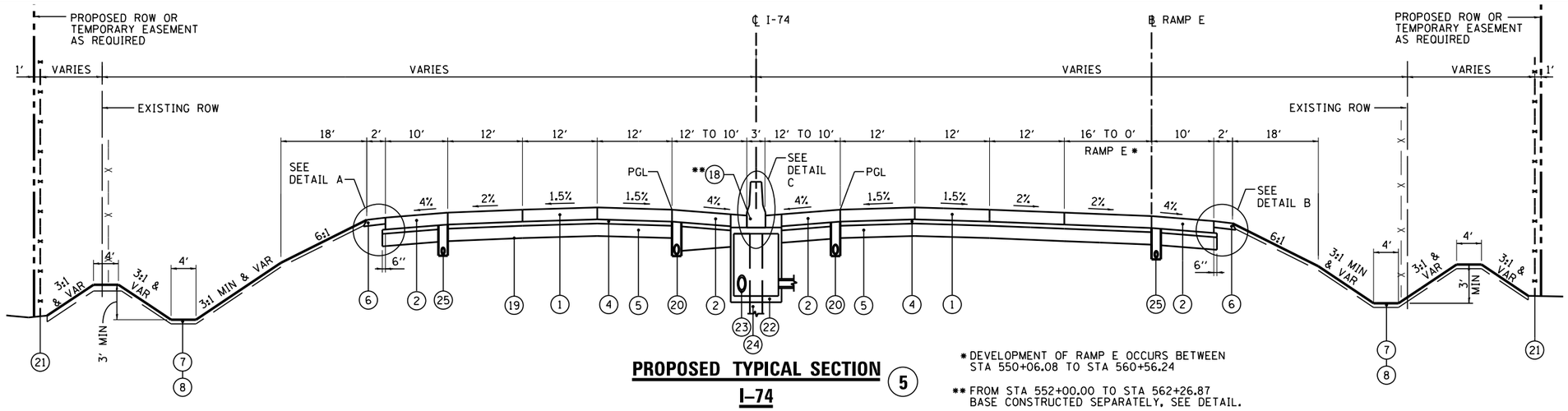

PROPOSED TYPICAL SECTION 5

I-74

STA 548+84.59 TO STA 562+26.87
BRIDGE OMISSION
STA 558+10.07 TO STA 559+40.49

*DEVELOPMENT OF RAMP E OCCURS BETWEEN STA 550+06.08 TO STA 560+56.24

**FROM STA 552+00.00 TO STA 562+26.87 BASE CONSTRUCTED SEPARATELY, SEE DETAIL.

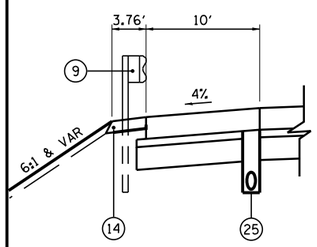

DETAIL A

STA 555+78.55 TO STA 557+20.37
STA 558+79.50 TO STA 566+62.55
STA 570+01.61 TO STA 576+46.91

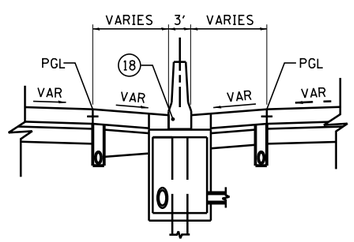

DETAIL C

STA 521+00.00 TO STA 561+00

PAVEMENT DESIGN I-74

STRUCTURAL DESIGN TRAFFIC: Year 2024

PV = 47,366 SU = 1,361 SU = 6,594

ROAD CLASSIFICATION CLASS I

PERCENT OF STRUCTURAL DESIGN TRAFFIC IN DESIGN LANE:

P = 20% S = 40% M = 40%

TRAFFIC FACTOR: Actual TF = 38.33 AC Type = N/A

Minimum TF = 8.93

PG GRADE: Binder = N/A Surface = N/A

SUBGRADE SUPPORT RATING:

SSR = POOR (Sta. 464+54.59 to 609+62.79)

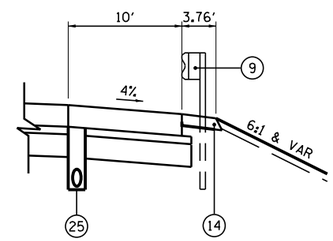

DETAIL B

STA 553+84.50 TO STA 558+70.44
STA 560+29.65 TO STA 567+30.30
STA 570+72.07 TO STA 574+15.52

PROPOSED LEGEND:

1. CONTINUOUSLY REINFORCED PORTLAND CEMENT CONCRETE PAVEMENT 11"
2. PORTLAND CEMENT CONCRETE SHOULDERS 11"
3. CONCRETE BARRIER, DOUBLE FACE, 42 INCH HEIGHT
4. STABILIZED SUBBASE - HOT-MIX ASPHALT, 4"
5. AGGREGATE SUBGRADE IMPROVEMENT 12"
6. AGGREGATE SHOULDERS, TYPE B 6"
7. TOPSOIL EXCAVATION AND PLACEMENT, 4"
8. SEEDING, CLASS _ (SEE EROSION AND SEDIMENT CONTROL PLANS)
9. STEEL PLATE BEAM GUARDRAIL, TYPE A, 6 FOOT POSTS
10. PORTLAND CEMENT CONCRETE PAVEMENT 10 1/4" (JOINTED)
11. PORTLAND CEMENT CONCRETE PAVEMENT 10" (JOINTED)
12. PORTLAND CEMENT CONCRETE SHOULDERS 10 1/4"
13. PORTLAND CEMENT CONCRETE SHOULDERS 10"
14. GUARDRAIL AGGREGATE EROSION CONTROL
15. CONCRETE BARRIER, SINGLE FACE, 42 INCH HEIGHT
16. COMBINATION CONCRETE CURB & GUTTER, TYPE B-6.24
17. NOT USED
18. CONCRETE BARRIER, DOUBLE FACE, 48 INCH HEIGHT
19. GEOTECHNICAL FABRIC FOR GROUND STABILIZATION
20. PIPE UNDERDRAINS 6"
21. CHAIN LINK FENCE, 4'
22. DRAINAGE STRUCTURE - TYPE 4, TY20 GRATE
23. STORM SEWER (SIZE VARIES)
24. LIGHT POLE FOUNDATION (SEE LIGHTING PLANS)
25. PIPE UNDERDRAINS 4"

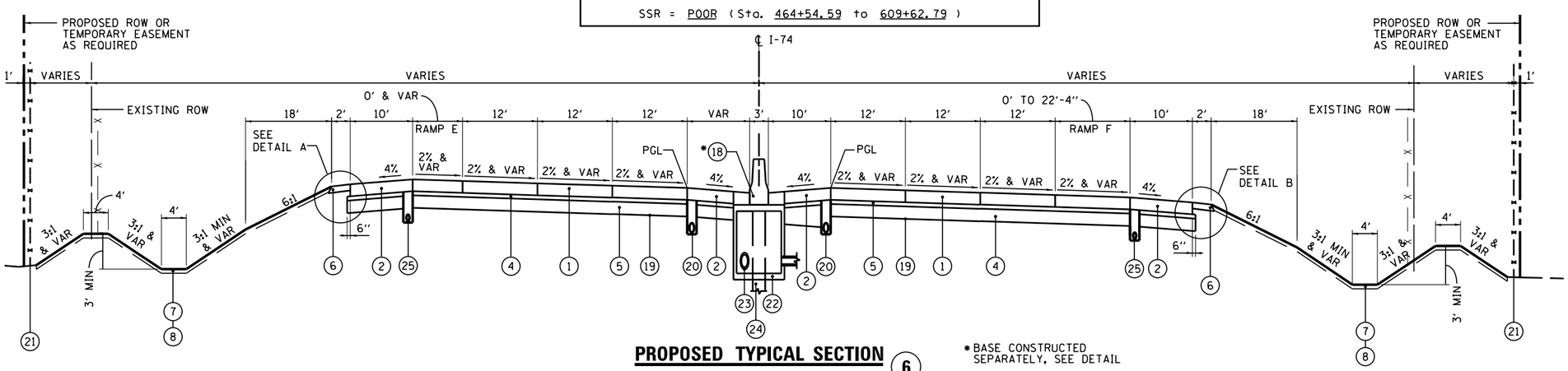

PROPOSED TYPICAL SECTION 6

I-74

STA 562+26.87 TO STA 585+11.87 (WB)
STA 562+26.87 TO STA 578+78.82(EB)
BEGIN TR 2.0% LANE AT PC STA 560+25.00
BEGIN TR 1.5% LANE AT PC STA 560+55.00
BEGIN SE RUNOFF AT PC STA 561+45.00
END SE RUNOFF AT PC STA 562+65.00
BRIDGE OMISSION STA 567+10.54 TO STA 570+22.70

*BASE CONSTRUCTED SEPARATELY, SEE DETAIL

NOTE:

SUPER ELEVATION TRANSITION STATIONS SHOWN ARE FOR EB I-74. SEE DETAIL SHEET FOR FULL SE TRANSITION DETAILS.

NOTE:

SEE CROSS SECTIONS FOR DETAILED GRADING

FILE NAME =	DESIGNED - EJA	REVISED -	
...\D468620-sht_Pr_Typ_I-74_03.dgn	DRAWN - TMB	REVISED -	
USER NAME = tblank	CHECKED - JNR	REVISED -	
PLOT DATE = 7/17/2012	DATE - JULY 20, 2012	REVISED -	

benesch engineers · scientists · planners

STATE OF ILLINOIS
DEPARTMENT OF TRANSPORTATION

PROPOSED TYPICAL SECTIONS
I-74

SCALE: NTS | SHEET NO. 3 OF 4 SHEETS | STA. TO STA.

F.A.I. RTE.	SECTION	COUNTY	TOTAL SHEETS	SHEET NO.
•	90-(14R;(14HB-4,14,14HVB)BR)	TAZEWELL	2433	53
		CONTRACT NO. 68620		
	ILLINOIS FED. AID PROJECT			

• 74 & 155

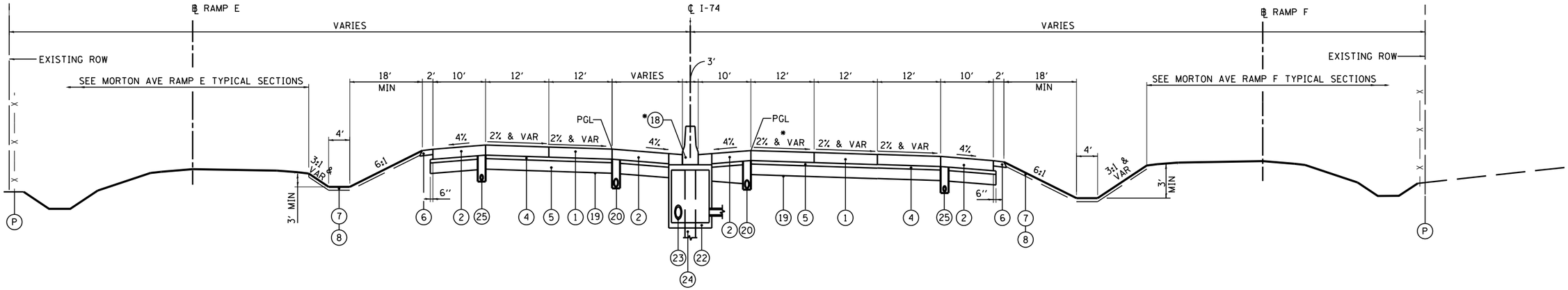

PROPOSED TYPICAL SECTION 7

I-74

STA 585+11.87 TO STA 589+08.72 (WB)
STA 578+78.82 TO STA 591+44.66 (EB)
BEGIN SE RUNOFF AT PT STA 591+05.00
END SE RUNOFF AT PT STA 592+25.00
END TR 1.5% LANE AT PT STA 593+15.00

* BASE CONSTRUCTED SEPARATELY, SEE DETAIL

EXISTING LEGEND:

- (A) EXISTING H.M.A. OVERLAY - VARIES
- (B) EXISTING P.C.C. PAVEMENT 9¼" TO 10¼"
- (C) EXISTING SUB-BASE GRANULAR MATERIAL 3" TO 6"
- (D) EXISTING GUARDRAIL
- (E) EXISTING P.C.C. SHOULDER 9¼" TO 10¼"
- (F) EXISTING H.M.A. SHOULDER 8" TO 10"
- (G) EXISTING AGGREGATE SHOULDER TYPE B 6"
- (H) EXISTING PIPE UNDERDRAIN 4"
- (I) EXISTING STABILIZED SUB-BASE, 4"
- (J) EXISTING SUB-BASE GRANULAR MATERIAL, TYPE A, 12"
- (K) EXISTING SUB-BASE GRANULAR MATERIAL, TYPE C
- (L) EXISTING SUB-BASE GRANULAR MATERIAL, TYPE A, 6"
- (M) EXISTING H.M.A. OVERLAY 2½"
- (N) EXISTING H.M.A. OVERLAY 5½"
- (O) EXISTING H.M.A. OVERLAY 5"
- (P) EXISTING CHAIN LINK FENCE

PAVEMENT DESIGN I-74

STRUCTURAL DESIGN TRAFFIC: Year 2024

PV = 47,366 SU = 1,361 SU = 6,594

ROAD CLASSIFICATION CLASS I

PERCENT OF STRUCTURAL DESIGN TRAFFIC IN DESIGN LANE:

P = 20% S = 40% M = 40%

TRAFFIC FACTOR: Actual TF = 38.33 AC Type = N/A

Minimum TF = 8.93

PG GRADE: Binder = N/A Surface = N/A

SUBGRADE SUPPORT RATING:

SSR = POOR (Sta. 464+54.59 to 609+62.79)

PROPOSED LEGEND:

- (1) CONTINUOUSLY REINFORCED PORTLAND CEMENT CONCRETE PAVEMENT 11"
- (2) PORTLAND CEMENT CONCRETE SHOULDERS 11"
- (3) CONCRETE BARRIER, DOUBLE FACE, 42 INCH HEIGHT
- (4) STABILIZED SUBBASE - HOT-MIX ASPHALT, 4"
- (5) AGGREGATE SUBGRADE IMPROVEMENT 12"
- (6) AGGREGATE SHOULDERS, TYPE B 6"
- (7) TOPSOIL EXCAVATION AND PLACEMENT, 4"
- (8) SEEDING, CLASS _ (SEE EROSION AND SEDIMENT CONTROL PLANS)
- (9) STEEL PLATE BEAM GUARDRAIL, TYPE A, 6 FOOT POSTS
- (10) PORTLAND CEMENT CONCRETE PAVEMENT 10 1/4" (JOINTED)
- (11) PORTLAND CEMENT CONCRETE PAVEMENT 10" (JOINTED)
- (12) PORTLAND CEMENT CONCRETE SHOULDERS 10 1/4"
- (13) PORTLAND CEMENT CONCRETE SHOULDERS 10"
- (14) GUARDRAIL AGGREGATE EROSION CONTROL
- (15) CONCRETE BARRIER, SINGLE FACE, 42 INCH HEIGHT
- (16) COMBINATION CONCRETE CURB & GUTTER, TYPE B-6.24
- (17) NOT USED
- (18) CONCRETE BARRIER, DOUBLE FACE, 48 INCH HEIGHT
- (19) GEOTECHNICAL FABRIC FOR GROUND STABILIZATION
- (20) PIPE UNDERDRAINS 6"
- (21) CHAIN LINK FENCE, 4'
- (22) DRAINAGE STRUCTURE - TYPE 4, TY20 GRATE
- (23) STORM SEWER (SIZE VARIES)
- (24) LIGHT POLE FOUNDATION (SEE LIGHTING PLANS)
- (25) PIPE UNDERDRAINS 4"

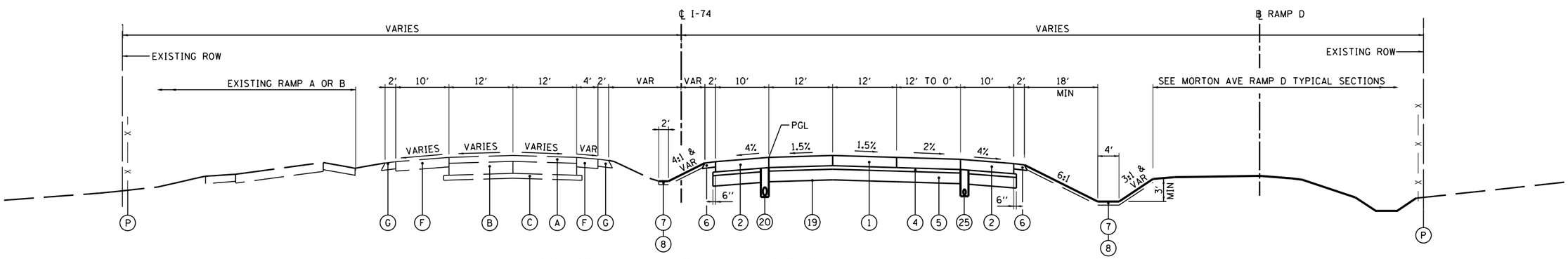

PROPOSED /EXISTING TYPICAL SECTION 8

I-74

STA 589+08.72 TO STA 609+62.87 (WB)
STA 591+44.66 TO STA 609+62.87 (EB)

* LANE DROP FROM STA 591+44.66 TO STA 599+84.66

NOTE:
SEE CROSS SECTIONS FOR DETAILED GRADING

FILE NAME =	DESIGNED - EJA	REVISED -	benesch engineers · scientists · planners
...\D468620-sht_Pr_Typ_I-74_04.dgn	DRAWN - TMB	REVISED -	STATE OF ILLINOIS DEPARTMENT OF TRANSPORTATION
USER NAME = tblank	CHECKED - JNR	REVISED -	
PLOT DATE = 7/17/2012	DATE - JULY 20, 2012	REVISED -	

PROPOSED TYPICAL SECTIONS
I-74

SCALE: NTS | SHEET NO. 4 OF 4 SHEETS | STA. | TO STA.

F.A.I. RTE.	SECTION	COUNTY	TOTAL SHEETS	SHEET NO.
•	90-(14R;(14HB-4,14,14HVB)BR)	TAZEWELL	2433	54

CONTRACT NO. 68620

ILLINOIS FED. AID PROJECT

• 74 & 155

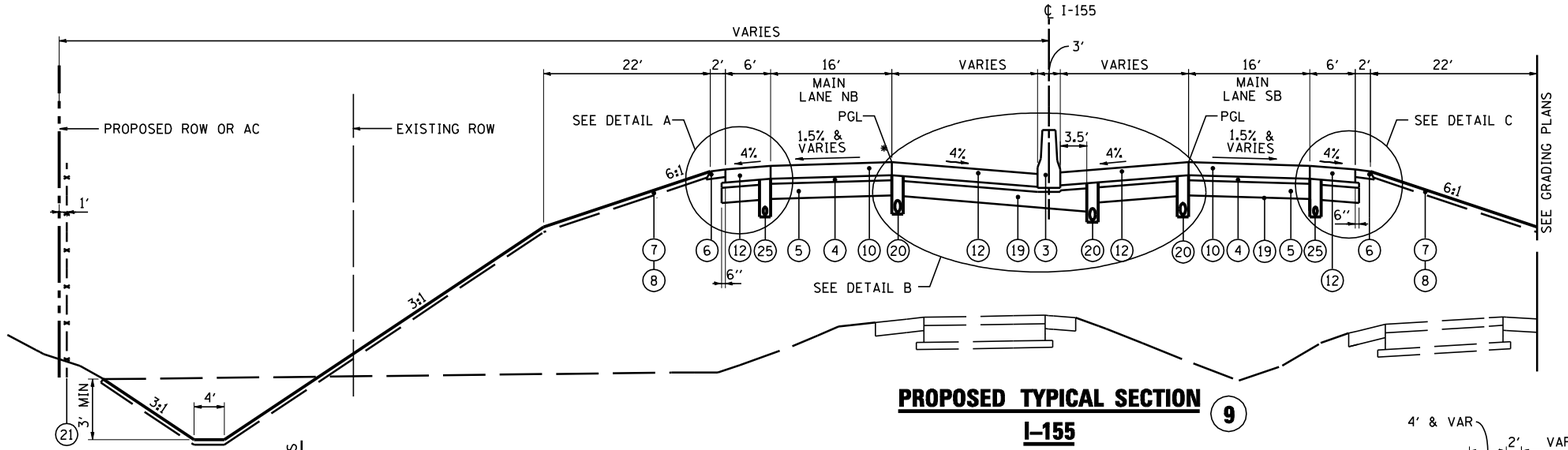

PROPOSED TYPICAL SECTION 9
I-155

STA 0+00.00 TO STA 9+01.06 (FAI 155 NB)
STA 0+00.00 TO STA 11+41.87 (FAI 155 SB)
BRIDGE OMISSION STA 2+69.36 TO STA 4+99.18 (FAI 155 NB OVER FAI 74)
BRIDGE OMISSION STA 2+53.51 TO STA 4+82.29 (FAI 155 SB OVER FAI 74)
NOTE: REFER TO SLOPE STEPS DETAIL

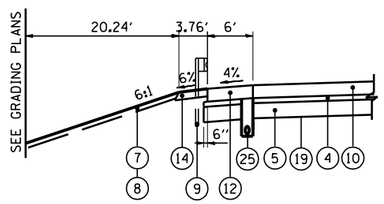

DETAIL A

STA 5+23.41 TO STA 7+22.67 (FAI 155 NB)
STA 17+59.59 TO STA 20+01.93 (FAI 155 NB)

PAVEMENT DESIGN I-155

STRUCTURAL DESIGN TRAFFIC: Year 2024

PV = 26,386 SU = 971 SU = 3,192

ROAD CLASSIFICATION CLASS I

PERCENT OF STRUCTURAL DESIGN TRAFFIC IN DESIGN LANE:

P = 32% S = 45% M = 45%

TRAFFIC FACTOR: Actual TF = 21.29 AC Type = N/A

Minimum TF = 10.05

PG GRADE: Binder = N/A Surface = N/A

SUBGRADE SUPPORT RATING:

SSR = POOR (Sta. 0 + 00.00 to 35 + 90.00)

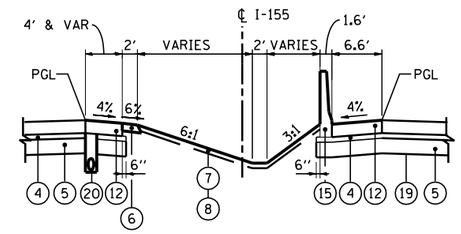

DETAIL B

STA 0+00.00 TO STA 2+68.77 (FAI 155 NB)
STA 0+00.00 TO STA 2+52.93(FAI 155 SB)

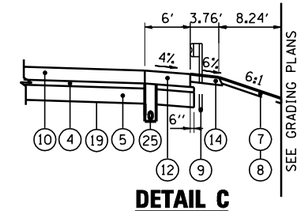

DETAIL C

STA 0+33.28 TO STA 2+30.64 (FAI 155 SB)

PROPOSED LEGEND:

1. CONTINUOUSLY REINFORCED PORTLAND CEMENT CONCRETE PAVEMENT 11"
2. PORTLAND CEMENT CONCRETE SHOULDERS 11"
3. CONCRETE BARRIER, DOUBLE FACE, 42 INCH HEIGHT
4. STABILIZED SUBBASE - HOT-MIX ASPHALT, 4"
5. AGGREGATE SUBGRADE IMPROVEMENT 12"
6. AGGREGATE SHOULDERS, TYPE B 6"
7. TOPSOIL EXCAVATION AND PLACEMENT, 4"
8. SEEDING, CLASS _ (SEE EROSION AND SEDIMENT CONTROL PLANS)
9. STEEL PLATE BEAM GUARDRAIL, TYPE A, 6 FOOT POSTS
10. PORTLAND CEMENT CONCRETE PAVEMENT 10 1/4" (JOINTED)
11. PORTLAND CEMENT CONCRETE PAVEMENT 10" (JOINTED)
12. PORTLAND CEMENT CONCRETE SHOULDERS 10 1/4"
13. PORTLAND CEMENT CONCRETE SHOULDERS 10"
14. GUARDRAIL AGGREGATE EROSION CONTROL
15. CONCRETE BARRIER, SINGLE FACE, 42 INCH HEIGHT
16. COMBINATION CONCRETE CURB & GUTTER, TYPE B-6.24
17. NOT USED
18. CONCRETE BARRIER, DOUBLE FACE, 48 INCH HEIGHT
19. GEOTECHNICAL FABRIC FOR GROUND STABILIZATION
20. PIPE UNDERDRAINS 6"
21. CHAIN LINK FENCE, 4'
22. DRAINAGE STRUCTURE - TYPE 4, TY20 GRATE
23. STORM SEWER (SIZE VARIES)
24. LIGHT POLE FOUNDATION (SEE LIGHTING PLANS)
25. PIPE UNDERDRAINS 4"

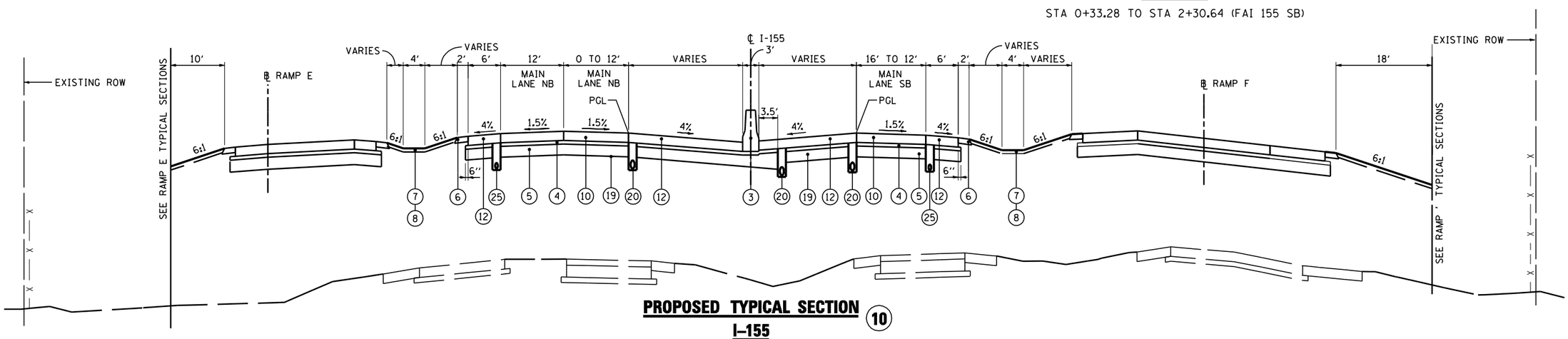

PROPOSED TYPICAL SECTION 10
I-155

STA 9+01.06 TO STA 14+62.92 (FAI 155 NB)
STA 11+41.87 TO 13+41.01 STA (FAI 155 SB)
CONCRETE BARRIER MEDIAN CONTINUES TO STA 18+17.79
NOTE: REFER TO SLOPE STEPS DETAIL

NOTE: SEE CROSS SECTIONS FOR DETAILED GRADING

FILE NAME =	DESIGNED - AJP	REVISED -	
...\D468620-sht_Pr_Typ_I-155_01.dgn	DRAWN - TMB	REVISED -	
USER NAME = jreambillo	CHECKED - JNR	REVISED -	
PLOT DATE = 7/26/2012	DATE - JULY 20, 2012	REVISED -	

benesch engineers · scientists · planners

STATE OF ILLINOIS
DEPARTMENT OF TRANSPORTATION

PROPOSED TYPICAL SECTIONS
I-155

SCALE: NTS | SHEET NO. 1 OF 3 SHEETS | STA. | TO STA.

F.A.I. RTE.	SECTION	COUNTY	TOTAL SHEETS	SHEET NO.
•	90-(14R;(14HB-4,14,14HVB)BR)	TAZEWELL	2433	55
		CONTRACT NO. 68620		
	ILLINOIS FED. AID PROJECT			

• 74 & 155

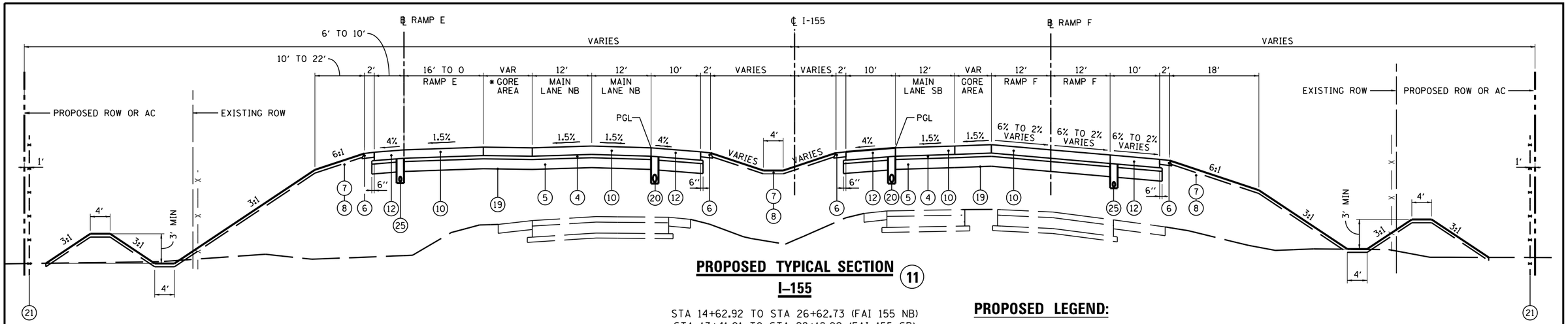

PROPOSED TYPICAL SECTION 11
I-155

STA 14+62.92 TO STA 26+62.73 (FAI 155 NB)
STA 13+41.01 TO STA 28+18.09 (FAI 155 SB)
BEGIN TR 1.5% LANE AT PC STA 26+00.00
BEGIN SE RUNOFF AT PC STA 26+90.00
END SE RUNOFF AT PC STA 29+66.00
* RAMP E GORE AREA BEGINS AT STA 13+77.60
† DEPRESSED MEDIAN BEGINS AT STA 18+17.79
NOTE: REFER TO SLOPE STEPS DETAIL

PAVEMENT DESIGN I-155

STRUCTURAL DESIGN TRAFFIC: Year 2024

PV = 26,386 SU = 971 SU = 3,192

ROAD CLASSIFICATION CLASS I

PERCENT OF STRUCTURAL DESIGN TRAFFIC IN DESIGN LANE:

P = 32% S = 45% M = 45%

TRAFFIC FACTOR: Actual TF = 21.29 AC Type = N/A

Minimum TF = 10.05

PG GRADE: Binder = N/A Surface = N/A

SUBGRADE SUPPORT RATING:

SSR = POOR (Sta. 0 + 00.00 to 35 + 90.00)

PROPOSED LEGEND:

1. CONTINUOUSLY REINFORCED PORTLAND CEMENT CONCRETE PAVEMENT 11"
2. PORTLAND CEMENT CONCRETE SHOULDERS 11"
3. CONCRETE BARRIER, DOUBLE FACE, 42 INCH HEIGHT
4. STABILIZED SUBBASE - HOT-MIX ASPHALT, 4"
5. AGGREGATE SUBGRADE IMPROVEMENT 12"
6. AGGREGATE SHOULDERS, TYPE B 6"
7. TOPSOIL EXCAVATION AND PLACEMENT, 4"
8. SEEDING, CLASS _ (SEE EROSION AND SEDIMENT CONTROL PLANS)
9. STEEL PLATE BEAM GUARDRAIL, TYPE A, 6 FOOT POSTS
10. PORTLAND CEMENT CONCRETE PAVEMENT 10 1/4" (JOINTED)
11. PORTLAND CEMENT CONCRETE PAVEMENT 10" (JOINTED)
12. PORTLAND CEMENT CONCRETE SHOULDERS 10 1/4"
13. PORTLAND CEMENT CONCRETE SHOULDERS 10"
14. GUARDRAIL AGGREGATE EROSION CONTROL
15. CONCRETE BARRIER, SINGLE FACE, 42 INCH HEIGHT
16. COMBINATION CONCRETE CURB & GUTTER, TYPE B-6.24
17. NOT USED
18. CONCRETE BARRIER, DOUBLE FACE, 48 INCH HEIGHT
19. GEOTECHNICAL FABRIC FOR GROUND STABILIZATION
20. PIPE UNDERDRAINS 6"
21. CHAIN LINK FENCE, 4'
22. DRAINAGE STRUCTURE - TYPE 4, TY20 GRATE
23. STORM SEWER (SIZE VARIES)
24. LIGHT POLE FOUNDATION (SEE LIGHTING PLANS)
25. PIPE UNDERDRAINS 4"

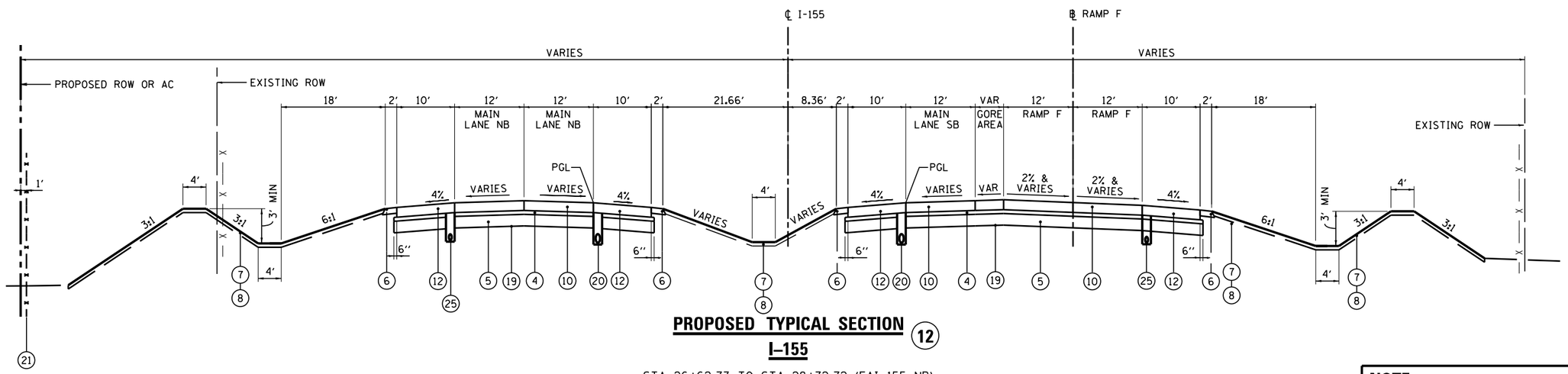

PROPOSED TYPICAL SECTION 12
I-155

STA 26+62.73 TO STA 28+72.72 (FAI 155 NB)
STA 28+18.09 TO STA 34+22.73 (FAI 155 SB)
BEGIN TR 1.5% LANE AT PC STA 26+00.00
BEGIN SE RUNOFF AT PC STA 26+90.00
END SE RUNOFF AT PC STA 29+66.00

NOTE:
SEE CROSS SECTIONS FOR DETAILED GRADING

FILE NAME =	DESIGNED - AJP	REVISED -	
...\D468620-sht_Pr_Typ_I-155_02.dgn	DRAWN - TMB	REVISED -	
USER NAME = tblank	CHECKED - JNR	REVISED -	
PLOT DATE = 7/17/2012	DATE - JULY 20, 2012	REVISED -	

benesch
engineers · scientists · planners

STATE OF ILLINOIS
DEPARTMENT OF TRANSPORTATION

PROPOSED TYPICAL SECTIONS
I-155

SCALE: NTS | SHEET NO. 2 OF 3 SHEETS | STA. TO STA.

F.A.I. RTE.	SECTION	COUNTY	TOTAL SHEETS	SHEET NO.
•	90-[14R;(14HB-4,14,14HVB)BR]	TAZEWELL	2433	56
		CONTRACT NO. 68620		
	ILLINOIS FED. AID PROJECT			

• 74 & 155

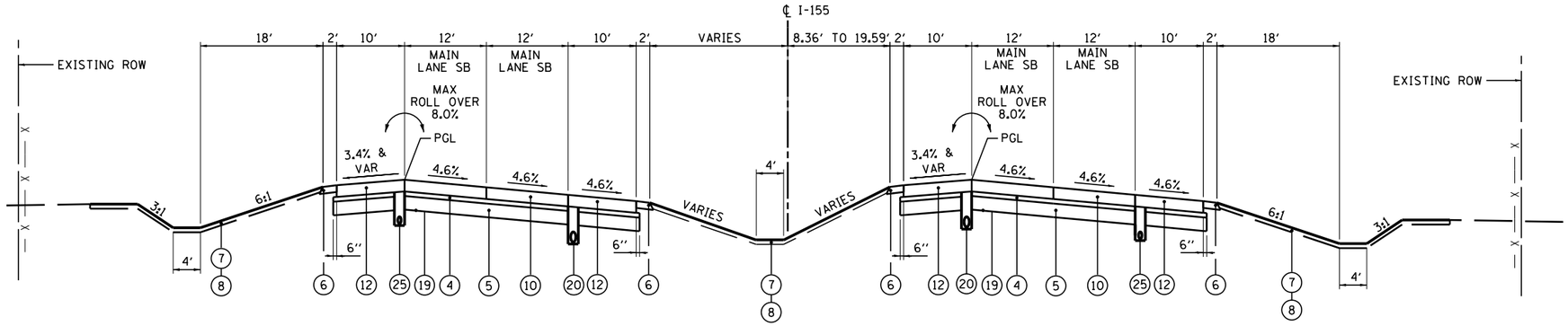

PROPOSED TYPICAL SECTION (13)
I–155

STA 28+72.72 TO STA 35+90.00 (FAI 155 NB)
STA 34+22.73 TO STA 35+90.00 (FAI 155 SB)

PAVEMENT DESIGN I–155

STRUCTURAL DESIGN TRAFFIC: Year 2024

PV = 26,386 SU = 971 SU = 3,192

ROAD CLASSIFICATION CLASS I

PERCENT OF STRUCTURAL DESIGN TRAFFIC IN DESIGN LANE:

P = 32% S = 45% M = 45%

TRAFFIC FACTOR: Actual TF = 21.29 AC Type = N/A

Minimum TF = 10.05

PG GRADE: Binder = N/A Surface = N/A

SUBGRADE SUPPORT RATING:

SSR = POOR (Sta. 0 + 00.00 to 35 + 90.00)

PROPOSED LEGEND:

1. CONTINUOUSLY REINFORCED PORTLAND CEMENT CONCRETE PAVEMENT 11″
2. PORTLAND CEMENT CONCRETE SHOULDERS 11″
3. CONCRETE BARRIER, DOUBLE FACE, 42 INCH HEIGHT
4. STABILIZED SUBBASE - HOT-MIX ASPHALT, 4″
5. AGGREGATE SUBGRADE IMPROVEMENT 12″
6. AGGREGATE SHOULDERS, TYPE B 6″
7. TOPSOIL EXCAVATION AND PLACEMENT, 4″
8. SEEDING, CLASS _ (SEE EROSION AND SEDIMENT CONTROL PLANS)
9. STEEL PLATE BEAM GUARDRAIL, TYPE A, 6 FOOT POSTS
10. PORTLAND CEMENT CONCRETE PAVEMENT 10 1/4″ (JOINTED)
11. PORTLAND CEMENT CONCRETE PAVEMENT 10″ (JOINTED)
12. PORTLAND CEMENT CONCRETE SHOULDERS 10 1/4″
13. PORTLAND CEMENT CONCRETE SHOULDERS 10″
14. GUARDRAIL AGGREGATE EROSION CONTROL
15. CONCRETE BARRIER, SINGLE FACE, 42 INCH HEIGHT
16. COMBINATION CONCRETE CURB & GUTTER, TYPE B-6.24
17. NOT USED
18. CONCRETE BARRIER, DOUBLE FACE, 48 INCH HEIGHT
19. GEOTECHNICAL FABRIC FOR GROUND STABILIZATION
20. PIPE UNDERDRAINS 6″
21. CHAIN LINK FENCE, 4′
22. DRAINAGE STRUCTURE - TYPE 4, TY20 GRATE
23. STORM SEWER (SIZE VARIES)
24. LIGHT POLE FOUNDATION (SEE LIGHTING PLANS)
25. PIPE UNDERDRAINS 4″

NOTE:
SEE CROSS SECTIONS FOR DETAILED GRADING

FILE NAME =	DESIGNED - AJP	REVISED -	
...\D468620-sht_Pr_Typ_I-155_03.dgn	DRAWN - TMB	REVISED -	
USER NAME = tblank	CHECKED - JNR	REVISED -	
PLOT DATE = 7/17/2012	DATE - JULY 20, 2012	REVISED -	

benesch
engineers · scientists · planners

STATE OF ILLINOIS
DEPARTMENT OF TRANSPORTATION

PROPOSED TYPICAL SECTIONS
I–155

SCALE: NTS | SHEET NO. 3 OF 3 SHEETS | STA. TO STA.

F.A.I. RTE.	SECTION	COUNTY	TOTAL SHEETS	SHEET NO.
•	90-(14R);(14HB-4,14,14HVB)BR1	TAZEWELL	2433	57
		CONTRACT NO. 68620		
	ILLINOIS FED. AID PROJECT			

• 74 & 155

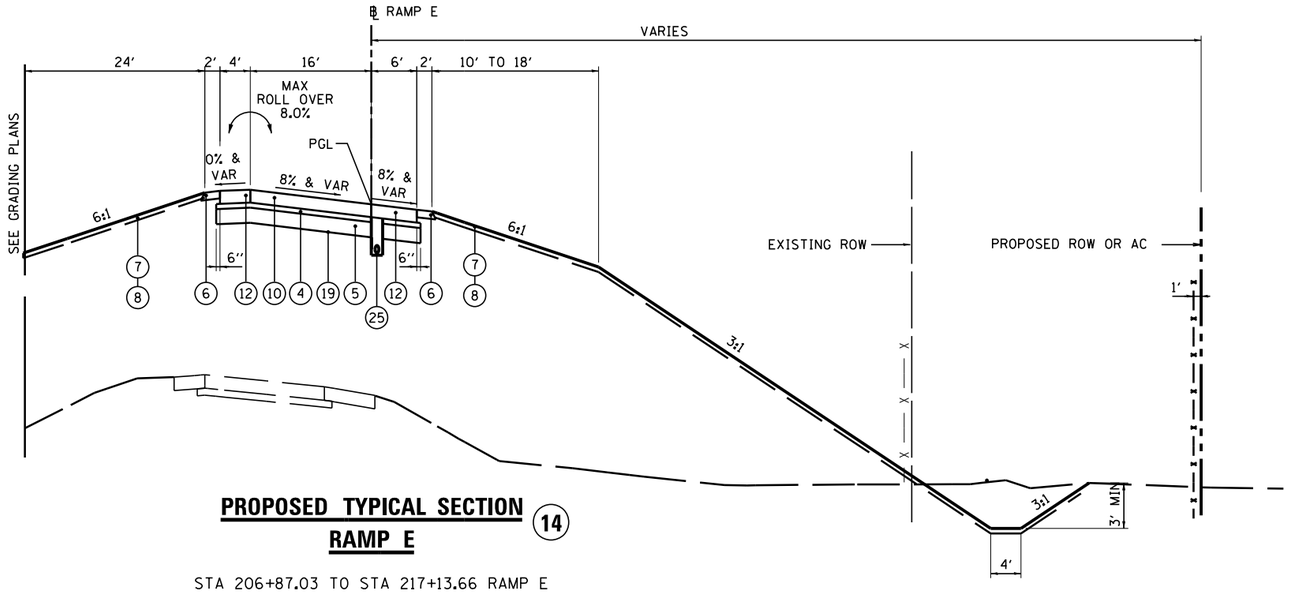

PROPOSED TYPICAL SECTION (14)
RAMP E

STA 206+87.03 TO STA 217+13.66 RAMP E
NOTE: REFER TO SLOPE STEPS DETAIL

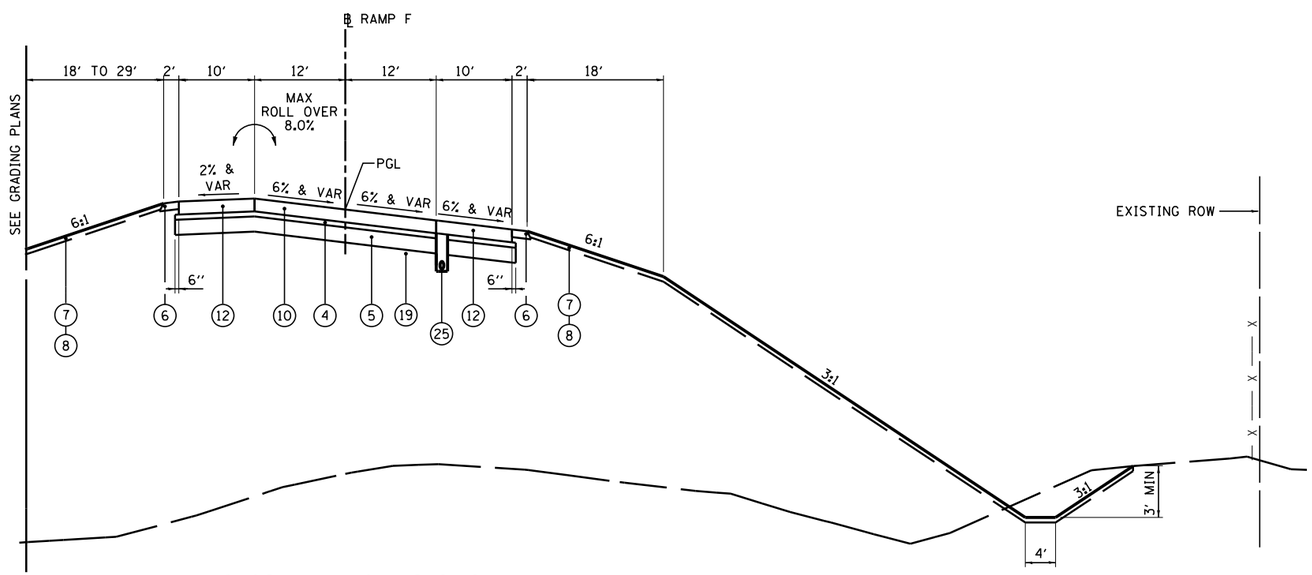

PROPOSED TYPICAL SECTION (15)
RAMP F

STA 313+97.75 TO STA 334+97.22 RAMP F
NOTE: REFER TO SLOPE STEPS DETAIL

PROPOSED LEGEND:

1. CONTINUOUSLY REINFORCED PORTLAND CEMENT CONCRETE PAVEMENT 11"
2. PORTLAND CEMENT CONCRETE SHOULDERS 11"
3. CONCRETE BARRIER, DOUBLE FACE, 42 INCH HEIGHT
4. STABILIZED SUBBASE - HOT-MIX ASPHALT, 4"
5. AGGREGATE SUBGRADE IMPROVEMENT 12"
6. AGGREGATE SHOULDERS, TYPE B 6"
7. TOPSOIL EXCAVATION AND PLACEMENT, 4"
8. SEEDING, CLASS _ (SEE EROSION AND SEDIMENT CONTROL PLANS)
9. STEEL PLATE BEAM GUARDRAIL, TYPE A, 6 FOOT POSTS
10. PORTLAND CEMENT CONCRETE PAVEMENT 10 1/4" (JOINTED)
11. PORTLAND CEMENT CONCRETE PAVEMENT 10" (JOINTED)
12. PORTLAND CEMENT CONCRETE SHOULDERS 10 1/4"
13. PORTLAND CEMENT CONCRETE SHOULDERS 10"
14. GUARDRAIL AGGREGATE EROSION CONTROL
15. CONCRETE BARRIER, SINGLE FACE, 42 INCH HEIGHT
16. COMBINATION CONCRETE CURB & GUTTER, TYPE B-6.24
17. NOT USED
18. CONCRETE BARRIER, DOUBLE FACE, 48 INCH HEIGHT
19. GEOTECHNICAL FABRIC FOR GROUND STABILIZATION
20. PIPE UNDERDRAINS 6"
21. CHAIN LINK FENCE, 4'
22. DRAINAGE STRUCTURE - TYPE 4, TY20 GRATE
23. STORM SEWER (SIZE VARIES)
24. LIGHT POLE FOUNDATION (SEE LIGHTING PLANS)
25. PIPE UNDERDRAINS 4"

PAVEMENT DESIGN I-74/I-155 TRUMPET INTERCHANGE RAMPS

STRUCTURAL DESIGN TRAFFIC: Year 2024

PV = 11,429 SU = 424 SU = 1,391

ROAD CLASSIFICATION CLASS I

PERCENT OF STRUCTURAL DESIGN TRAFFIC IN DESIGN LANE:

P = 100% S = 100% M = 100%

TRAFFIC FACTOR: Actual TF = 20.62 AC Type = N/A

Minimum TF = 11.17

PG GRADE: Binder = N/A Surface = N/A

SUBGRADE SUPPORT RATING:

SSR = POOR

NOTE:
SEE CROSS SECTIONS FOR DETAILED GRADING

FILE NAME =	DESIGNED - AJP	REVISED -	
...\D468620-sht_Pr_Typ_I-74_I-155_Ramps_EF_01.dgn	DRAWN - TMB	REVISED -	
USER NAME = tblank	CHECKED - JNR	REVISED -	
PLOT DATE = 7/17/2012	DATE - JULY 20, 2012	REVISED -	

benesch
engineers · scientists · planners

STATE OF ILLINOIS
DEPARTMENT OF TRANSPORTATION

PROPOSED TYPICAL SECTIONS
I-74 & I-155 RAMPS E & F

SCALE: NTS | SHEET NO. 1 OF 2 SHEETS | STA. TO STA.

F.A.I. RTE.	SECTION	COUNTY	TOTAL SHEETS	SHEET NO.
•	90-(14R;(14HB-4,14,14HVB)BR)	TAZEWELL	2433	58
		CONTRACT NO. 68620		
	ILLINOIS FED. AID PROJECT			

• 74 & 155

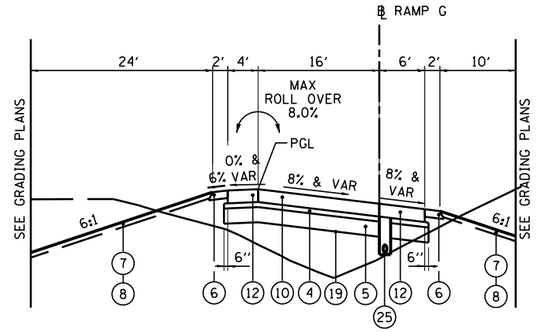

PROPOSED TYPICAL SECTION 16
RAMP G

STA 16+77.34 TO STA 28+48.96

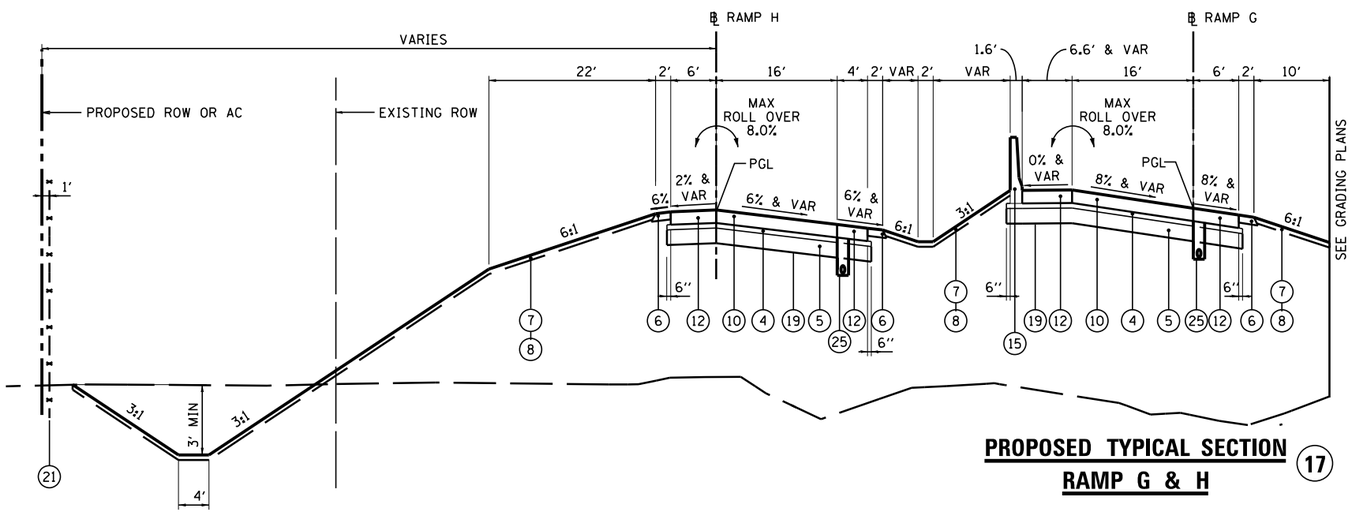

PROPOSED TYPICAL SECTION 17
RAMP G & H

STA 28+50.65 TO STA 39+33.16 (RAMP G)
STA 112+78.10 TO STA 100+82.76 (RAMP H)
NOTE: REFER TO SLOPE STEPS DETAIL

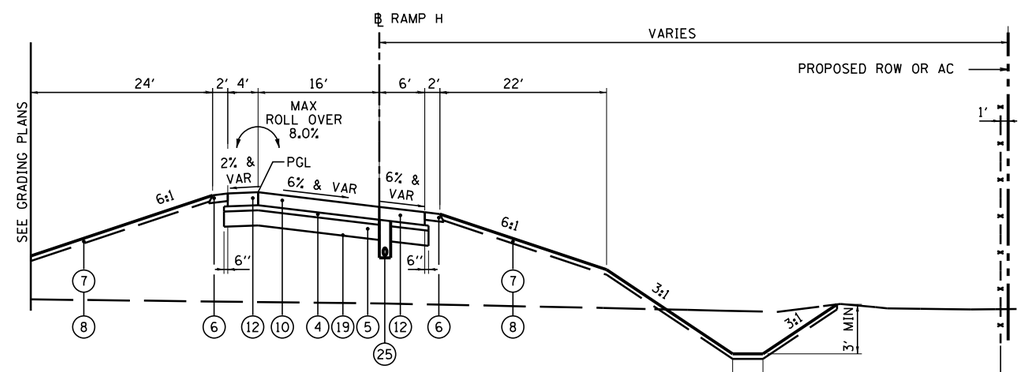

PROPOSED TYPICAL SECTION 18
RAMP H

STA 112+79.91 TO STA 130+67.32

PROPOSED LEGEND:

1. CONTINUOUSLY REINFORCED PORTLAND CEMENT CONCRETE PAVEMENT 11"
2. PORTLAND CEMENT CONCRETE SHOULDERS 11"
3. CONCRETE BARRIER, DOUBLE FACE, 42 INCH HEIGHT
4. STABILIZED SUBBASE - HOT-MIX ASPHALT, 4"
5. AGGREGATE SUBGRADE IMPROVEMENT 12"
6. AGGREGATE SHOULDERS, TYPE B 6"
7. TOPSOIL EXCAVATION AND PLACEMENT, 4"
8. SEEDING, CLASS _ (SEE EROSION AND SEDIMENT CONTROL PLANS)
9. STEEL PLATE BEAM GUARDRAIL, TYPE A, 6 FOOT POSTS
10. PORTLAND CEMENT CONCRETE PAVEMENT 10 1/4" (JOINTED)
11. PORTLAND CEMENT CONCRETE PAVEMENT 10" (JOINTED)
12. PORTLAND CEMENT CONCRETE SHOULDERS 10 1/4"
13. PORTLAND CEMENT CONCRETE SHOULDERS 10"
14. GUARDRAIL AGGREGATE EROSION CONTROL
15. CONCRETE BARRIER, SINGLE FACE, 42 INCH HEIGHT
16. COMBINATION CONCRETE CURB & GUTTER, TYPE B-6.24
17. NOT USED
18. CONCRETE BARRIER, DOUBLE FACE, 48 INCH HEIGHT
19. GEOTECHNICAL FABRIC FOR GROUND STABILIZATION
20. PIPE UNDERDRAINS 6"
21. CHAIN LINK FENCE, 4'
22. DRAINAGE STRUCTURE - TYPE 4, TY20 GRATE
23. STORM SEWER (SIZE VARIES)
24. LIGHT POLE FOUNDATION (SEE LIGHTING PLANS)
25. PIPE UNDERDRAINS 4"

NOTE:
SEE CROSS SECTIONS FOR DETAILED GRADING

FILE NAME =	DESIGNED - AJP	REVISED -	
...\D468620-sht_Pr_Typ_I-74_I-155_Ramps_GH_02.dgn	DRAWN - TMB	REVISED -	
USER NAME = tblank	CHECKED - JNR	REVISED -	
PLOT DATE = 7/17/2012	DATE - JULY 20, 2012	REVISED -	

benesch
engineers · scientists · planners

STATE OF ILLINOIS
DEPARTMENT OF TRANSPORTATION

PROPOSED TYPICAL SECTIONS
I-74 & I-155 RAMPS G & H

SCALE: NTS | SHEET NO. 2 OF 2 SHEETS | STA. | TO STA.

F.A.I. RTE.	SECTION	COUNTY	TOTAL SHEETS	SHEET NO.
•	90-[14R;(14HB-4,14,14HVB)BR]	TAZEWELL	2433	59

CONTRACT NO. 68620
ILLINOIS FED. AID PROJECT

• 74 & 155

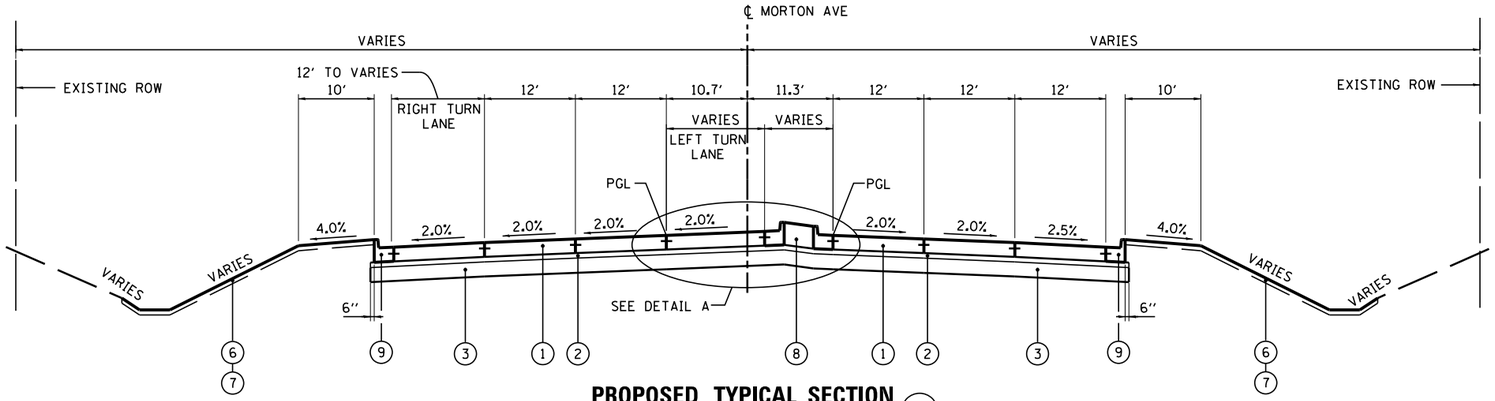

PROPOSED TYPICAL SECTION 19
MORTON AVE
STA 26+94.00 TO STA 29+07.40

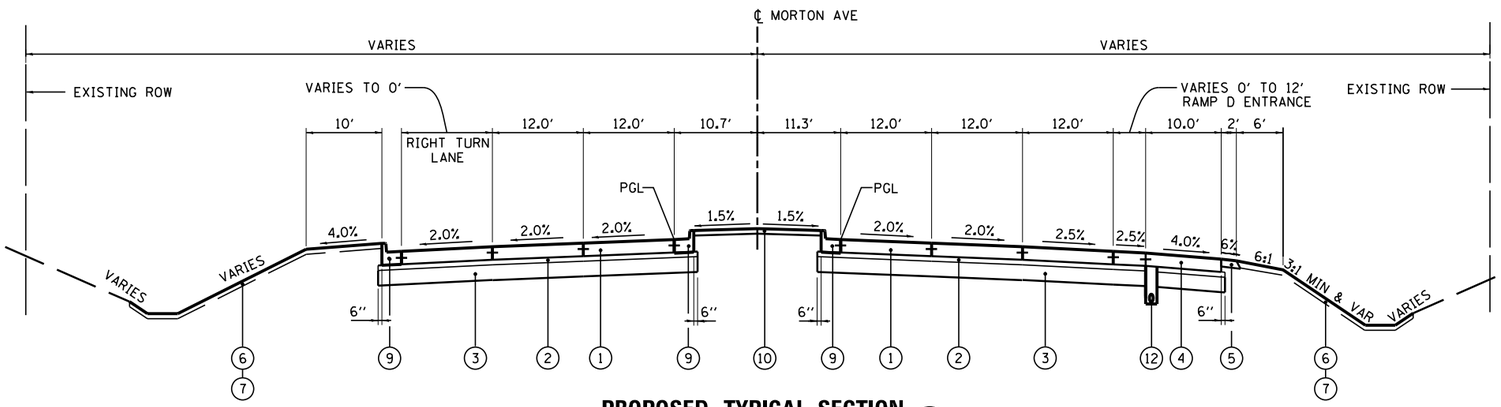

PROPOSED TYPICAL SECTION 20
MORTON AVE
STA 29+07.40 TO STA 30+29.70

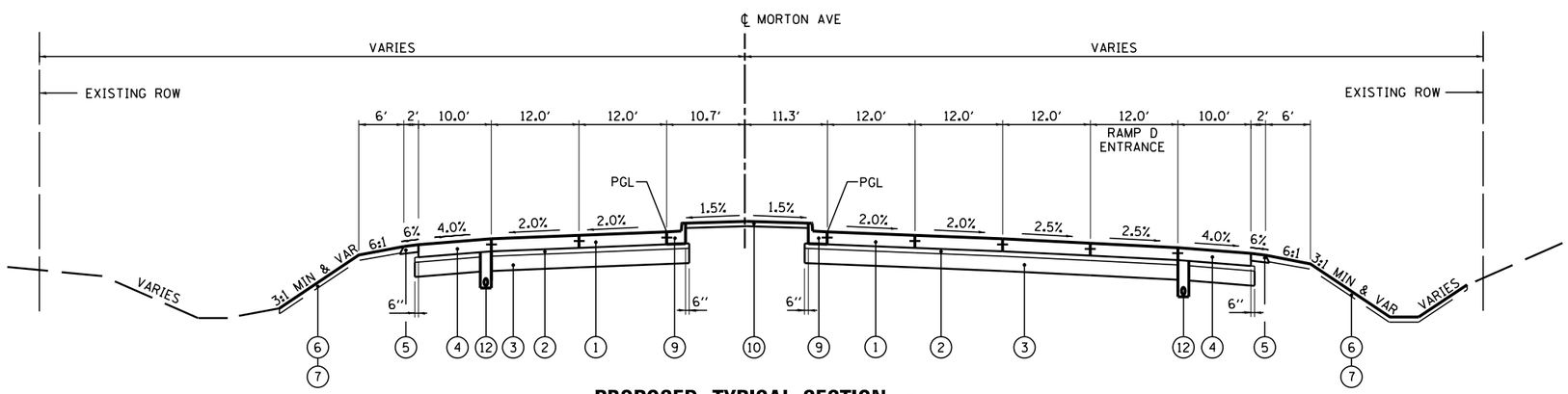

PROPOSED TYPICAL SECTION 21
MORTON AVE
STA 30+29.70 TO STA 34+86.75

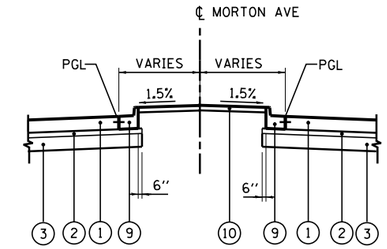

DETAIL A
STA 27+43.85 TO STA 29+07.40

PAVEMENT DESIGN MORTON AVE

STRUCTURAL DESIGN TRAFFIC: Year 2024
PV = 19,132 SU = 853 SU = 811
ROAD CLASSIFICATION CLASS I
PERCENT OF STRUCTURAL DESIGN TRAFFIC IN DESIGN LANE:
P = 32% S = 45% M = 45%
TRAFFIC FACTOR: Actual TF = 6.21 AC Type = N/A
Minimum TF = 10.05
PG GRADE: Binder = N/A Surface = N/A
SUBGRADE SUPPORT RATING:
SSR = POOR (Sta. 26+94.00 to 49+30.67)

PROPOSED LEGEND:

1. PORTLAND CEMENT CONCRETE PAVEMENT 10" (JOINTED)
2. SUBBASE GRANULAR MATERIAL, TYPE A, 4" (SEE NOTE 2)
3. SUBBASE GRANULAR MATERIAL, TYPE A, 12" (SEE NOTE 3)
4. PORTLAND CEMENT CONCRETE SHOULDERS 10"
5. AGGREGATE SHOULDERS, TYPE B 6"
6. TOPSOIL FURNISH AND PLACE, 4"
7. SEEDING, CLASS 2A
8. CONCRETE MEDIAN, TYPE SB-6.24
9. COMBINATION CONCRETE CURB AND GUTTER, TYPE B-6.24
10. CONCRETE MEDIAN SURFACE, 4"
11. CORRUGATED MEDIAN
12. PIPE UNDERDRAINS 6"
13. STEEL PLATE BEAM GUARDRAIL, TYPE A, 6 FOOT POSTS
14. GUARDRAIL AGGREGATE EROSION CONTROL

NOTE

1. SEE CROSS SECTIONS FOR DETAIL GRADING
2. 4" OF AGGREGATE SUBBASE GRANULAR MATERIAL, TYPE A TO FILL HOLES AND IRREGULARITIES IN EXISTING SUBBASE CAUSED BY PAVEMENT REMOVAL
3. EXISTING 12" SUBBASE TO REMAIN. PROPOSED 12" OF SUBBASE GRANULAR MATERIAL, TYPE A AT LOCATIONS WHERE PROPOSED PAVEMENT WILL BE PLACED ON EXISTING EMBANKMENT THAT CURRENTLY DOES NOT HAVE AGGREGATE SUBBASE

FILE NAME =	DESIGNED - I S	REVISED -	benesch engineers · scientists · planners
...\D468620-sht_Pr_Typ_Morton_01.dgn	DRAWN - TMB	REVISED -	STATE OF ILLINOIS DEPARTMENT OF TRANSPORTATION
USER NAME = tblank	CHECKED - JNR	REVISED -	
PLOT DATE = 7/17/2012	DATE - JULY 20, 2012	REVISED -	

PROPOSED TYPICAL SECTIONS
MORTON AVE

SCALE: NTS | SHEET NO. 1 OF 3 SHEETS | STA. TO STA.

F.A.I. RTE.	SECTION	COUNTY	TOTAL SHEETS	SHEET NO.
•	90-(14R;(14HB-4,14,14HVB)BR)	TAZEWELL	2433	60
		CONTRACT NO. 68620		
	ILLINOIS FED. AID PROJECT			

• 74 & 155

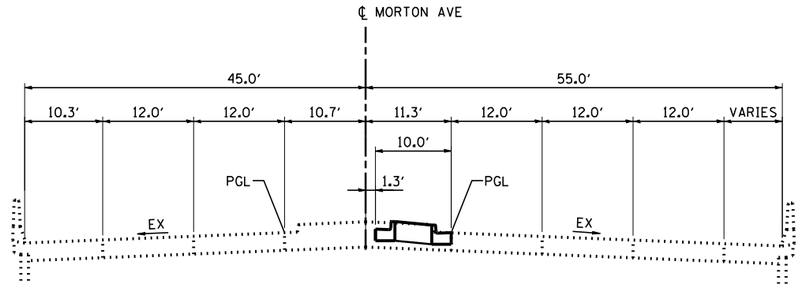

PROPOSED TYPICAL SECTION 22
MORTON AVE

BRIDGE OMISSION STA 34+86.75 TO STA 37+99.73 (MORTON AVE OVER I-74)

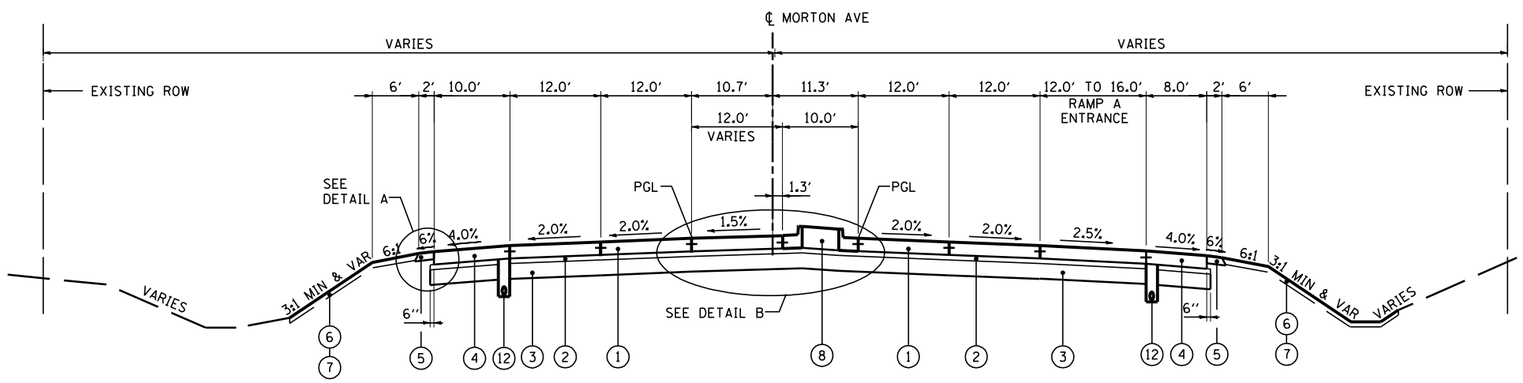

PROPOSED TYPICAL SECTION 23
MORTON AVE

STA 37+99.73 TO STA 44+09.68

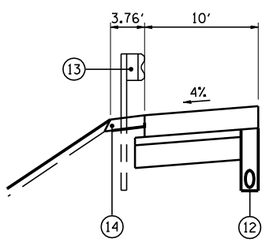

DETAIL A

STA 37+69.47 TO STA 41+43.00

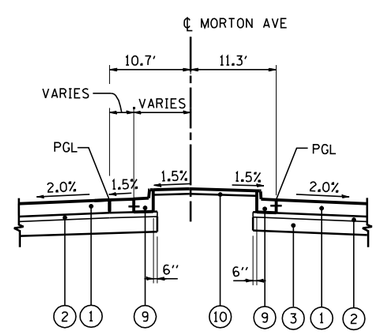

DETAIL B

STA 38+64.50 TO STA 40+64.40

PAVEMENT DESIGN MORTON AVE

STRUCTURAL DESIGN TRAFFIC: Year 2024

PV = 19,132 SU = 853 SU = 811

ROAD CLASSIFICATION CLASS I

PERCENT OF STRUCTURAL DESIGN TRAFFIC IN DESIGN LANE:

P = 32% S = 45% M = 45%

TRAFFIC FACTOR: Actual TF = 6.21 AC Type = N/A

Minimum TF = 10.05

PG GRADE: Binder = N/A Surface = N/A

SUBGRADE SUPPORT RATING:

SSR = POOR (Sta. 26+94.00 to 49+30.67)

PROPOSED LEGEND:

1. PORTLAND CEMENT CONCRETE PAVEMENT 10'' (JOINTED)
2. SUBBASE GRANULAR MATERIAL, TYPE A, 4'' (SEE NOTE 2)
3. SUBBASE GRANULAR MATERIAL, TYPE A, 12'' (SEE NOTE 3)
4. PORTLAND CEMENT CONCRETE SHOULDERS 10''
5. AGGREGATE SHOULDERS, TYPE B 6''
6. TOPSOIL FURNISH AND PLACE, 4''
7. SEEDING, CLASS 2A
8. CONCRETE MEDIAN, TYPE SB-6.24
9. COMBINATION CONCRETE CURB AND GUTTER, TYPE B-6.24
10. CONCRETE MEDIAN SURFACE, 4''
11. CORRUGATED MEDIAN
12. PIPE UNDERDRAINS 6''
13. STEEL PLATE BEAM GUARDRAIL, TYPE A, 6 FOOT POSTS
14. GUARDRAIL AGGREGATE EROSION CONTROL

NOTE

1. SEE CROSS SECTIONS FOR DETAIL GRADING
2. 4'' OF AGGREGATE SUBBASE GRANULAR MATERIAL, TYPE A TO FILL HOLES AND IRREGULARITIES IN EXISTING SUBBASE CAUSED BY PAVEMENT REMOVAL
3. EXISTING 12'' SUBBASE TO REMAIN. PROPOSED 12'' OF SUBBASE GRANULAR MATERIAL, TYPE A AT LOCATIONS WHERE PROPOSED PAVEMENT WILL BE PLACED ON EXISTING EMBANKMENT THAT CURRENTLY DOES NOT HAVE AGGREGATE SUBBASE

FILE NAME =	DESIGNED - I S	REVISED -	
...\D468620-sht_Pr_Typ_Morton_02.dgn	DRAWN - TMB	REVISED -	
USER NAME = jreambillo	CHECKED - JNR	REVISED -	
PLOT DATE = 7/26/2012	DATE - JULY 20, 2012	REVISED -	

benesch engineers · scientists · planners

STATE OF ILLINOIS
DEPARTMENT OF TRANSPORTATION

PROPOSED TYPICAL SECTIONS
MORTON AVE

SCALE: NTS | SHEET NO. 2 OF 3 SHEETS | STA. TO STA.

F.A.I. RTE.	SECTION	COUNTY	TOTAL SHEETS	SHEET NO.
•	90-I14R;(14HB-4,14,14HVB)BR1	TAZEWELL	2433	61

CONTRACT NO. 68620

ILLINOIS FED. AID PROJECT

• 74 & 155

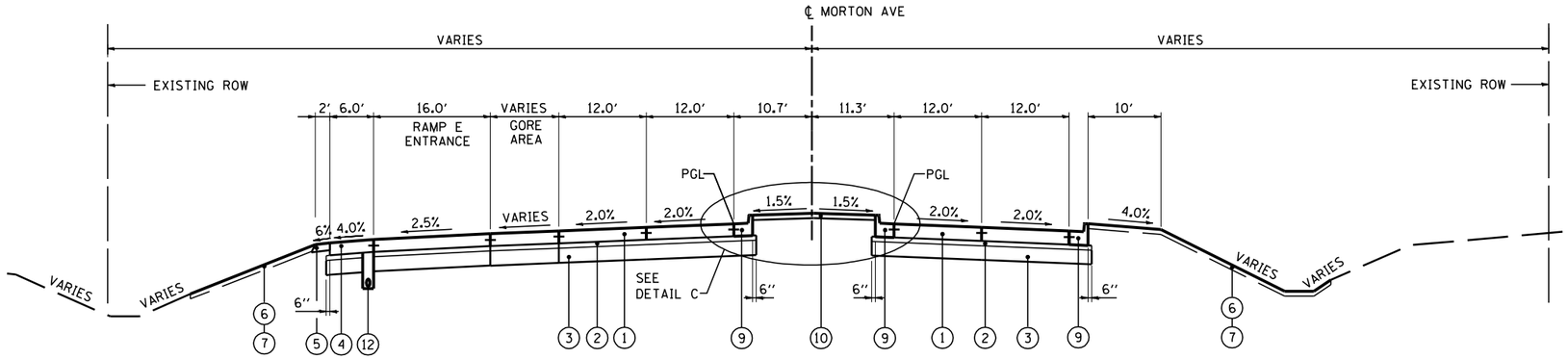

PROPOSED TYPICAL SECTION 24
MORTON AVE

STA 44+09.68 TO STA 46+73.37

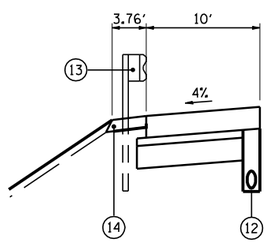

DETAIL A

STA 47+40.88 TO STA 49+08.07

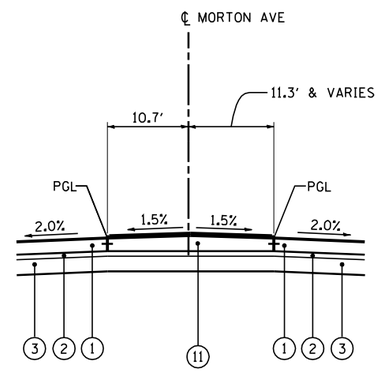

DETAIL C

STA 45+35.25 TO STA 46+73.37

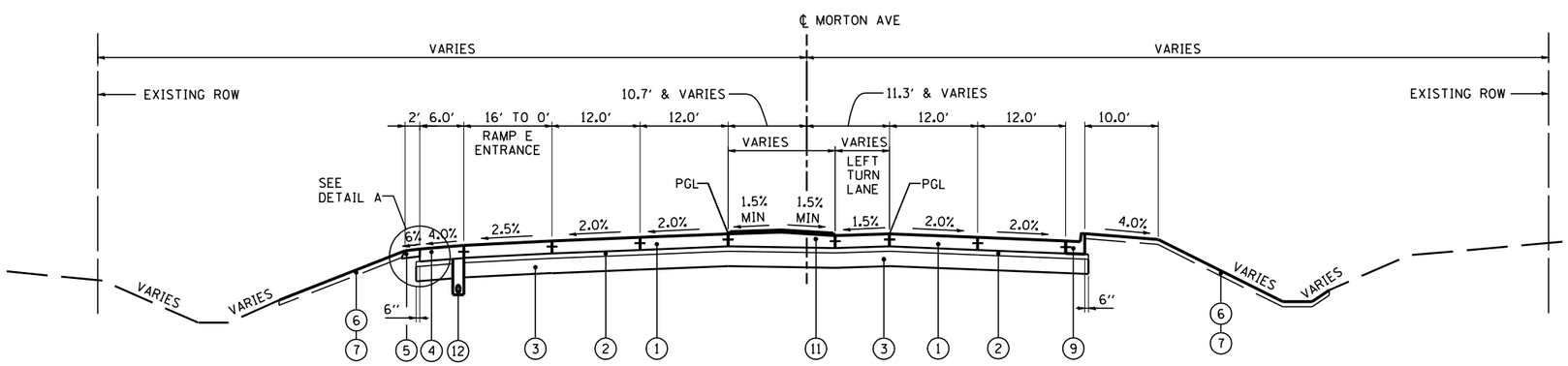

PROPOSED TYPICAL SECTION 25
MORTON AVE

STA 46+73.37 TO STA 49+30.67

PAVEMENT DESIGN MORTON AVE

STRUCTURAL DESIGN TRAFFIC: Year 2024

PV = 19,132 SU = 853 SU = 811

ROAD CLASSIFICATION CLASS I

PERCENT OF STRUCTURAL DESIGN TRAFFIC IN DESIGN LANE:

P = 32% S = 45% M = 45%

TRAFFIC FACTOR: Actual TF = 6.21 AC Type = N/A

Minimum TF = 10.05

PG GRADE: Binder = N/A Surface = N/A

SUBGRADE SUPPORT RATING:

SSR = POOR (Sta. 26+94.00 to 49+30.67)

PROPOSED LEGEND:

1. PORTLAND CEMENT CONCRETE PAVEMENT 10" (JOINTED)
2. SUBBASE GRANULAR MATERIAL, TYPE A, 4" (SEE NOTE 2)
3. SUBBASE GRANULAR MATERIAL, TYPE A, 12" (SEE NOTE 3)
4. PORTLAND CEMENT CONCRETE SHOULDERS 10"
5. AGGREGATE SHOULDERS, TYPE B 6"
6. TOPSOIL FURNISH AND PLACE, 4"
7. SEEDING, CLASS 2A
8. CONCRETE MEDIAN, TYPE SB-6.24
9. COMBINATION CONCRETE CURB AND GUTTER, TYPE B-6.24
10. CONCRETE MEDIAN SURFACE, 4"
11. CORRUGATED MEDIAN
12. PIPE UNDERDRAINS 6"
13. STEEL PLATE BEAM GUARDRAIL, TYPE A, 6 FOOT POSTS
14. GUARDRAIL AGGREGATE EROSION CONTROL

NOTE

1. SEE CROSS SECTIONS FOR DETAIL GRADING
2. 4" OF AGGREGATE SUBBASE GRANULAR MATERIAL, TYPE A TO FILL HOLES AND IRREGULARITIES IN EXISTING SUBBASE CAUSED BY PAVEMENT REMOVAL
3. EXISTING 12" SUBBASE TO REMAIN. PROPOSED 12" OF SUBBASE GRANULAR MATERIAL, TYPE A AT LOCATIONS WHERE PROPOSED PAVEMENT WILL BE PLACED ON EXISTING EMBANKMENT THAT CURRENTLY DOES NOT HAVE AGGREGATE SUBBASE

FILE NAME =	DESIGNED - I S	REVISED -	
...\D468620-sht_Pr_Typ_Morton_03.dgn	DRAWN - TMB	REVISED -	
USER NAME = jreambillo	CHECKED - JNR	REVISED -	
PLOT DATE = 7/26/2012	DATE - JULY 20, 2012	REVISED -	

benesch engineers · scientists · planners

STATE OF ILLINOIS
DEPARTMENT OF TRANSPORTATION

PROPOSED TYPICAL SECTIONS
MORTON AVE

SCALE: NTS | SHEET NO. 3 OF 3 SHEETS | STA. | TO STA.

F.A.I. RTE.	SECTION	COUNTY	TOTAL SHEETS	SHEET NO.
•	90-(14R;(14HB-4,14,14HVB)BR)	TAZEWELL	2433	62
		CONTRACT NO. 68620		
	ILLINOIS FED. AID PROJECT			

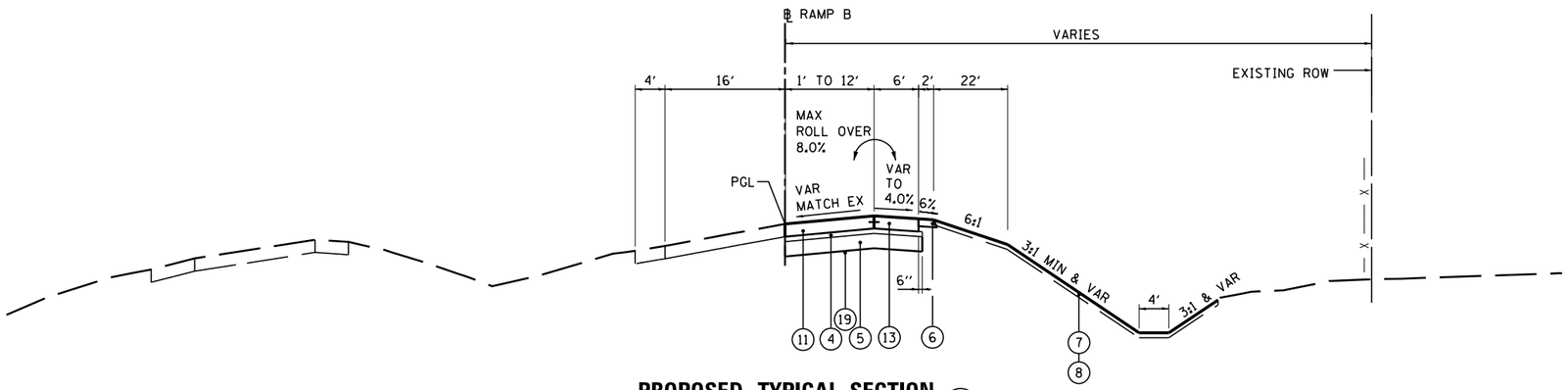

PROPOSED TYPICAL SECTION (26)
RAMP B

STA 4+01.99 TO STA 6+71.20

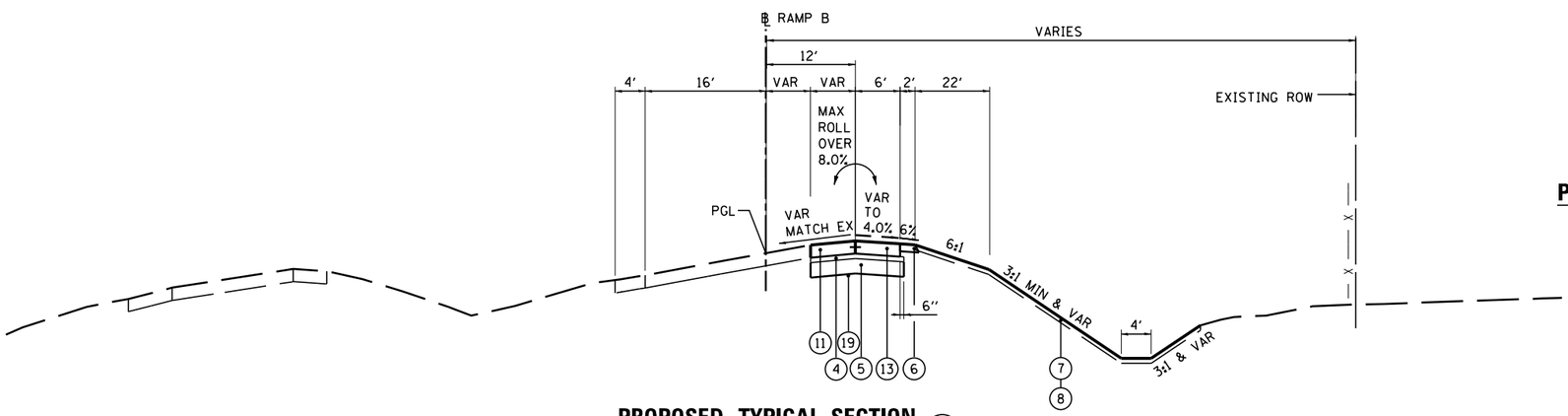

PROPOSED TYPICAL SECTION (27)
RAMP B

STA 6+71.20 TO STA 8+60.75

PROPOSED LEGEND:

1. CONTINUOUSLY REINFORCED PORTLAND CEMENT CONCRETE PAVEMENT 11"
2. PORTLAND CEMENT CONCRETE SHOULDERS 11"
3. CONCRETE BARRIER, DOUBLE FACE, 42 INCH HEIGHT
4. STABILIZED SUBBASE - HOT-MIX ASPHALT, 4"
5. AGGREGATE SUBGRADE IMPROVEMENT 12"
6. AGGREGATE SHOULDERS, TYPE B 6"
7. TOPSOIL EXCAVATION AND PLACEMENT, 4"
8. SEEDING, CLASS _ (SEE EROSION AND SEDIMENT CONTROL PLANS)
9. STEEL PLATE BEAM GUARDRAIL, TYPE A, 6 FOOT POSTS
10. PORTLAND CEMENT CONCRETE PAVEMENT 10 1/4" (JOINTED)
11. PORTLAND CEMENT CONCRETE PAVEMENT 10" (JOINTED)
12. PORTLAND CEMENT CONCRETE SHOULDERS 10 1/4"
13. PORTLAND CEMENT CONCRETE SHOULDERS 10"
14. GUARDRAIL AGGREGATE EROSION CONTROL
15. CONCRETE BARRIER, SINGLE FACE, 42 INCH HEIGHT
16. COMBINATION CONCRETE CURB & GUTTER, TYPE B-6.24
17. NOT USED
18. CONCRETE BARRIER, DOUBLE FACE, 48 INCH HEIGHT
19. GEOTECHNICAL FABRIC FOR GROUND STABILIZATION
20. PIPE UNDERDRAINS 6"
21. CHAIN LINK FENCE, 4'
22. DRAINAGE STRUCTURE - TYPE 4, TY20 GRATE
23. STORM SEWER (SIZE VARIES)
24. LIGHT POLE FOUNDATION (SEE LIGHTING PLANS)
25. PIPE UNDERDRAINS 4"

PAVEMENT DESIGN MORTON RAMP TYPICAL SECTIONS

STRUCTURAL DESIGN TRAFFIC: Year 2024

PV = 11,190 SU = 790 SU = 1,185

ROAD CLASSIFICATION CLASS I

PERCENT OF STRUCTURAL DESIGN TRAFFIC IN DESIGN LANE:

P = 100% S = 100% M = 100%

TRAFFIC FACTOR: Actual TF = 18.81 AC Type = N/A

Minimum TF = 11.17

PG GRADE: Binder = N/A Surface = N/A

SUBGRADE SUPPORT RATING:

SSR = POOR

NOTE:
SEE CROSS SECTIONS FOR DETAILED GRADING

FILE NAME =	DESIGNED - I S	REVISED -	
...\D468620-sht_Pr_Typ_Morton_Ramps_B_01.dgn	DRAWN - TMB	REVISED -	
USER NAME = tblank	CHECKED - JNR	REVISED -	
PLOT DATE = 7/17/2012	DATE - JULY 20, 2012	REVISED -	

benesch engineers · scientists · planners

STATE OF ILLINOIS
DEPARTMENT OF TRANSPORTATION

PROPOSED TYPICAL SECTIONS
MORTON AVE RAMPS

SCALE: NTS | SHEET NO. 1 OF 6 SHEETS | STA. TO STA.

F.A.I. RTE.	SECTION	COUNTY	TOTAL SHEETS	SHEET NO.
•	90-[14R;(14HB-4,14,14HVB)BR]	TAZEWELL	2433	63

CONTRACT NO. 68620

ILLINOIS FED. AID PROJECT

• 74 & 155

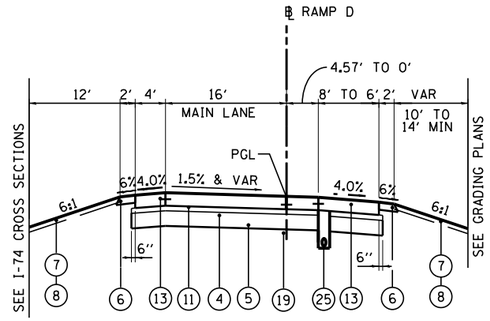

PROPOSED TYPICAL SECTION 28
RAMP D

STA 1101+75.24 TO STA 1105+05.25

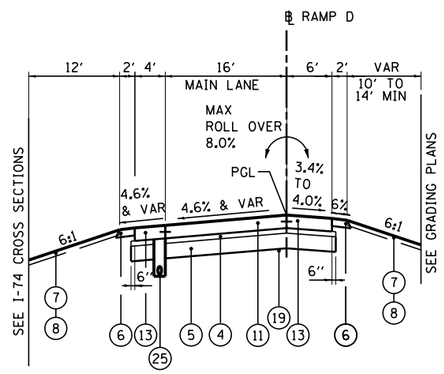

PROPOSED TYPICAL SECTION 29
RAMP D

STA 1105+05.25 TO STA PT STA 1107+31.30

SE TRANSITION IN FROM STA 1103+59.80 TO STA 1105+55.00
SE TRANSITION OUT FROM STA 1106+80.00 TO STA 1108+27.20

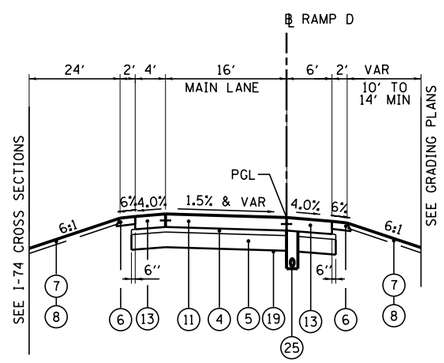

PROPOSED TYPICAL SECTION 30
RAMP D

STA 1107+31.30 TO STA 1109+27.29

PROPOSED LEGEND:

1. CONTINUOUSLY REINFORCED PORTLAND CEMENT CONCRETE PAVEMENT 11"
2. PORTLAND CEMENT CONCRETE SHOULDERS 11"
3. CONCRETE BARRIER, DOUBLE FACE, 42 INCH HEIGHT
4. STABILIZED SUBBASE - HOT-MIX ASPHALT, 4"
5. AGGREGATE SUBGRADE IMPROVEMENT 12"
6. AGGREGATE SHOULDERS, TYPE B 6"
7. TOPSOIL EXCAVATION AND PLACEMENT, 4"
8. SEEDING, CLASS _ (SEE EROSION AND SEDIMENT CONTROL PLANS)
9. STEEL PLATE BEAM GUARDRAIL, TYPE A, 6 FOOT POSTS
10. PORTLAND CEMENT CONCRETE PAVEMENT 10 1/4" (JOINTED)
11. PORTLAND CEMENT CONCRETE PAVEMENT 10" (JOINTED)
12. PORTLAND CEMENT CONCRETE SHOULDERS 10 1/4"
13. PORTLAND CEMENT CONCRETE SHOULDERS 10"
14. GUARDRAIL AGGREGATE EROSION CONTROL
15. CONCRETE BARRIER, SINGLE FACE, 42 INCH HEIGHT
16. COMBINATION CONCRETE CURB & GUTTER, TYPE B-6.24
17. NOT USED
18. CONCRETE BARRIER, DOUBLE FACE, 48 INCH HEIGHT
19. GEOTECHNICAL FABRIC FOR GROUND STABILIZATION
20. PIPE UNDERDRAINS 6"
21. CHAIN LINK FENCE, 4'
22. DRAINAGE STRUCTURE - TYPE 4, TY20 GRATE
23. STORM SEWER (SIZE VARIES)
24. LIGHT POLE FOUNDATION (SEE LIGHTING PLANS)
25. PIPE UNDERDRAINS 4"

PAVEMENT DESIGN MORTON RAMP TYPICAL SECTIONS

STRUCTURAL DESIGN TRAFFIC: Year 2024

PV = 11,190 SU = 790 SU = 1,185

ROAD CLASSIFICATION CLASS I

PERCENT OF STRUCTURAL DESIGN TRAFFIC IN DESIGN LANE:

P = 100% S = 100% M = 100%

TRAFFIC FACTOR: Actual TF = 18.81 AC Type = N/A

Minimum TF = 11.17

PG GRADE: Binder = N/A Surface = N/A

SUBGRADE SUPPORT RATING:

SSR = POOR

NOTE:
SEE CROSS SECTIONS FOR DETAILED GRADING

FILE NAME =	DESIGNED - I S	REVISED -	
...\D468620-sht_Pr_Typ_Morton_Ramps_D_01.dgn	DRAWN - TMB	REVISED -	
USER NAME = tblank	CHECKED - JNR	REVISED -	
PLOT DATE = 7/17/2012	DATE - JULY 20, 2012	REVISED -	

benesch engineers · scientists · planners

STATE OF ILLINOIS
DEPARTMENT OF TRANSPORTATION

PROPOSED TYPICAL SECTIONS
MORTON AVE RAMPS

SCALE: NTS | SHEET NO. 2 OF 6 SHEETS | STA. TO STA.

F.A.I. RTE.	SECTION	COUNTY	TOTAL SHEETS	SHEET NO.
•	90-(14R);(14HB-4,14,14HVB)BR1	TAZEWELL	2433	64
		CONTRACT NO. 68620		
		ILLINOIS FED. AID PROJECT		

• 74 & 155

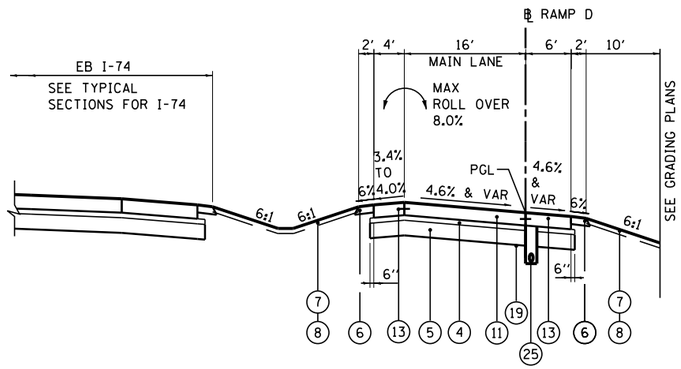

PROPOSED TYPICAL SECTION 31
RAMP D

STA 1109+27.29 TO STA 1112+53.07

SE TRANSITION IN FROM STA 1108+27.20 TO STA 1109+74.40
SE TRANSITION OUT FROM STA 1111+23.07 TO STA 1112+06.07

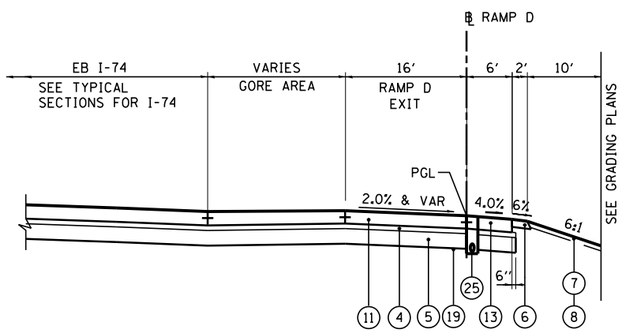

PROPOSED TYPICAL SECTION 32
RAMP D

STA 1112+53.07 TO STA 1113+98.94

PROPOSED LEGEND:

1. CONTINUOUSLY REINFORCED PORTLAND CEMENT CONCRETE PAVEMENT 11"
2. PORTLAND CEMENT CONCRETE SHOULDERS 11"
3. CONCRETE BARRIER, DOUBLE FACE, 42 INCH HEIGHT
4. STABILIZED SUBBASE - HOT-MIX ASPHALT, 4"
5. AGGREGATE SUBGRADE IMPROVEMENT 12"
6. AGGREGATE SHOULDERS, TYPE B 6"
7. TOPSOIL EXCAVATION AND PLACEMENT, 4"
8. SEEDING, CLASS _ (SEE EROSION AND SEDIMENT CONTROL PLANS)
9. STEEL PLATE BEAM GUARDRAIL, TYPE A, 6 FOOT POSTS
10. PORTLAND CEMENT CONCRETE PAVEMENT 10 1/4" (JOINTED)
11. PORTLAND CEMENT CONCRETE PAVEMENT 10" (JOINTED)
12. PORTLAND CEMENT CONCRETE SHOULDERS 10 1/4"
13. PORTLAND CEMENT CONCRETE SHOULDERS 10"
14. GUARDRAIL AGGREGATE EROSION CONTROL
15. CONCRETE BARRIER, SINGLE FACE, 42 INCH HEIGHT
16. COMBINATION CONCRETE CURB & GUTTER, TYPE B-6.24
17. NOT USED
18. CONCRETE BARRIER, DOUBLE FACE, 48 INCH HEIGHT
19. GEOTECHNICAL FABRIC FOR GROUND STABILIZATION
20. PIPE UNDERDRAINS 6"
21. CHAIN LINK FENCE, 4'
22. DRAINAGE STRUCTURE - TYPE 4, TY20 GRATE
23. STORM SEWER (SIZE VARIES)
24. LIGHT POLE FOUNDATION (SEE LIGHTING PLANS)
25. PIPE UNDERDRAINS 4"

PAVEMENT DESIGN MORTON RAMP TYPICAL SECTIONS

STRUCTURAL DESIGN TRAFFIC: Year 2024

PV = 11,190 SU = 790 SU = 1,185

ROAD CLASSIFICATION CLASS I

PERCENT OF STRUCTURAL DESIGN TRAFFIC IN DESIGN LANE:

P = 100% S = 100% M = 100%

TRAFFIC FACTOR: Actual TF = 18.81 AC Type = N/A

Minimum TF = 11.17

PG GRADE: Binder = N/A Surface = N/A

SUBGRADE SUPPORT RATING:

SSR = POOR

NOTE:
SEE CROSS SECTIONS FOR DETAILED GRADING

FILE NAME =	DESIGNED - I S	REVISED -	
...\D468620-sht_Pr_Typ_Morton_Ramps_D_02.dgn	DRAWN - TMB	REVISED -	
USER NAME = tblank	CHECKED - JNR	REVISED -	
PLOT DATE = 7/17/2012	DATE - JULY 20, 2012	REVISED -	

benesch engineers · scientists · planners

STATE OF ILLINOIS
DEPARTMENT OF TRANSPORTATION

PROPOSED TYPICAL SECTIONS
MORTON AVE RAMPS

SCALE: NTS | SHEET NO. 3 OF 6 SHEETS | STA. TO STA.

F.A.I. RTE.	SECTION	COUNTY	TOTAL SHEETS	SHEET NO.
•	90-I14R;(14HB-4,14,14HVB)BR1	TAZEWELL	2433	65
		CONTRACT NO. 68620		
	ILLINOIS	FED. AID PROJECT		

• 74 & 155

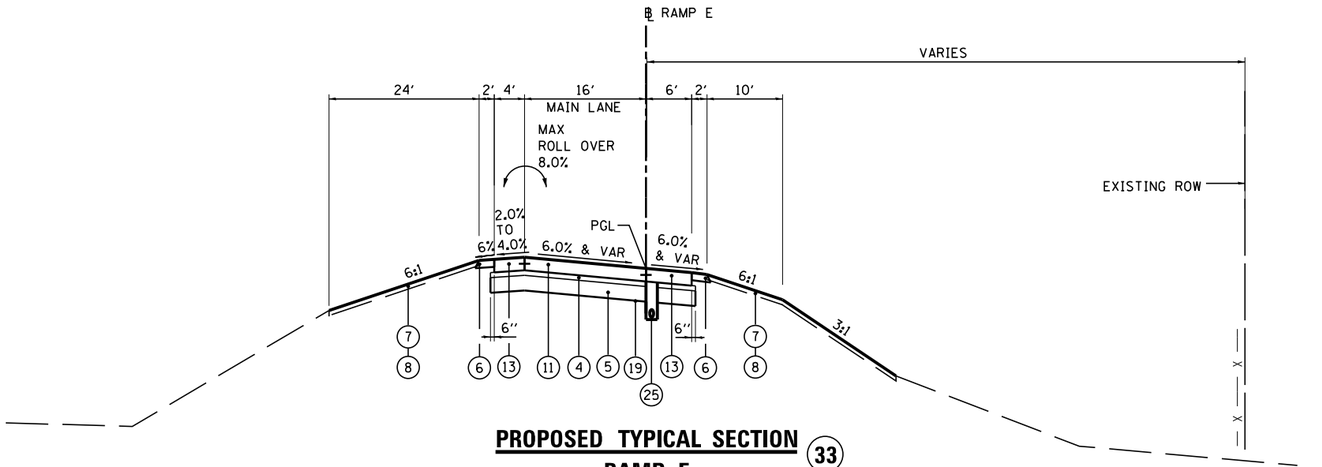

PROPOSED TYPICAL SECTION (33)
RAMP E

STA 13+62.03 TO STA 26+05.79

SE TRANSITION IN FROM STA 15+21.19 TO STA 16+78.38
SE TRANSITION OUT FROM STA 24+75.79 TO STA 28+41.39

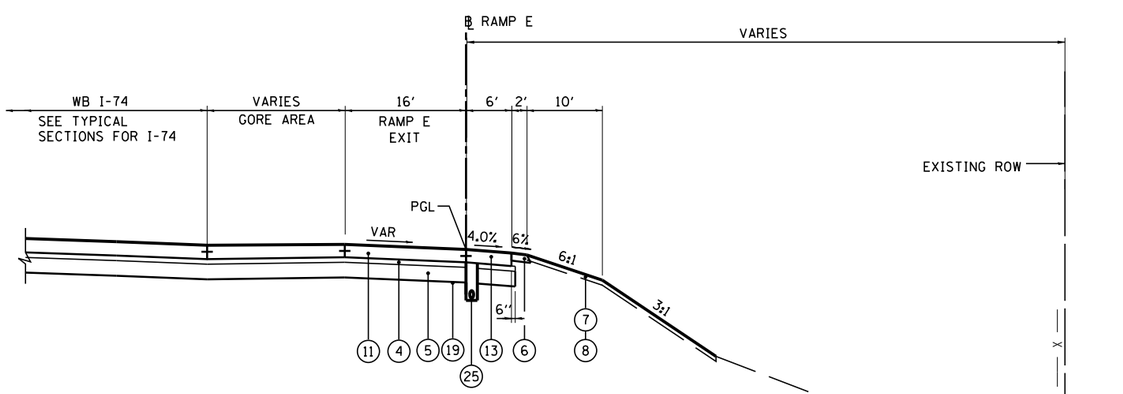

PROPOSED TYPICAL SECTION (34)
RAMP E

STA 26+05.79 TO STA 28+41.39

PROPOSED LEGEND:

1. CONTINUOUSLY REINFORCED PORTLAND CEMENT CONCRETE PAVEMENT 11"
2. PORTLAND CEMENT CONCRETE SHOULDERS 11"
3. CONCRETE BARRIER, DOUBLE FACE, 42 INCH HEIGHT
4. STABILIZED SUBBASE - HOT-MIX ASPHALT, 4"
5. AGGREGATE SUBGRADE IMPROVEMENT 12"
6. AGGREGATE SHOULDERS, TYPE B 6"
7. TOPSOIL EXCAVATION AND PLACEMENT, 4"
8. SEEDING, CLASS _ (SEE EROSION AND SEDIMENT CONTROL PLANS)
9. STEEL PLATE BEAM GUARDRAIL, TYPE A, 6 FOOT POSTS
10. PORTLAND CEMENT CONCRETE PAVEMENT 10 1/4" (JOINTED)
11. PORTLAND CEMENT CONCRETE PAVEMENT 10" (JOINTED)
12. PORTLAND CEMENT CONCRETE SHOULDERS 10 1/4"
13. PORTLAND CEMENT CONCRETE SHOULDERS 10"
14. GUARDRAIL AGGREGATE EROSION CONTROL
15. CONCRETE BARRIER, SINGLE FACE, 42 INCH HEIGHT
16. COMBINATION CONCRETE CURB & GUTTER, TYPE B-6.24
17. NOT USED
18. CONCRETE BARRIER, DOUBLE FACE, 48 INCH HEIGHT
19. GEOTECHNICAL FABRIC FOR GROUND STABILIZATION
20. PIPE UNDERDRAINS 6"
21. CHAIN LINK FENCE, 4'
22. DRAINAGE STRUCTURE - TYPE 4, TY20 GRATE
23. STORM SEWER (SIZE VARIES)
24. LIGHT POLE FOUNDATION (SEE LIGHTING PLANS)
25. PIPE UNDERDRAINS 4"

PAVEMENT DESIGN MORTON RAMP TYPICAL SECTIONS

STRUCTURAL DESIGN TRAFFIC: Year 2024

PV = 11,190 SU = 790 SU = 1,185

ROAD CLASSIFICATION CLASS I

PERCENT OF STRUCTURAL DESIGN TRAFFIC IN DESIGN LANE:

P = 100% S = 100% M = 100%

TRAFFIC FACTOR: Actual TF = 18.81 AC Type = N/A

Minimum TF = 11.17

PG GRADE: Binder = N/A Surface = N/A

SUBGRADE SUPPORT RATING:

SSR = POOR

NOTE:
SEE CROSS SECTIONS FOR DETAILED GRADING

FILE NAME =	DESIGNED - I S	REVISED -	
...\D468620-sht_Pr_Typ_Morton_Ramps_E_01.dgn	DRAWN - TMB	REVISED -	
USER NAME = tblank	CHECKED - JNR	REVISED -	
PLOT DATE = 7/17/2012	DATE - JULY 20, 2012	REVISED -	

benesch engineers · scientists · planners

STATE OF ILLINOIS
DEPARTMENT OF TRANSPORTATION

PROPOSED TYPICAL SECTIONS
MORTON AVE RAMPS

SCALE: NTS | SHEET NO. 4 OF 6 SHEETS | STA. | TO STA.

F.A.I. RTE.	SECTION	COUNTY	TOTAL SHEETS	SHEET NO.
•	90-(14R;(14HB-4,14,14HVB)BR)	TAZEWELL	2433	66
		CONTRACT NO. 68620		
	ILLINOIS FED. AID PROJECT			

• 74 & 155

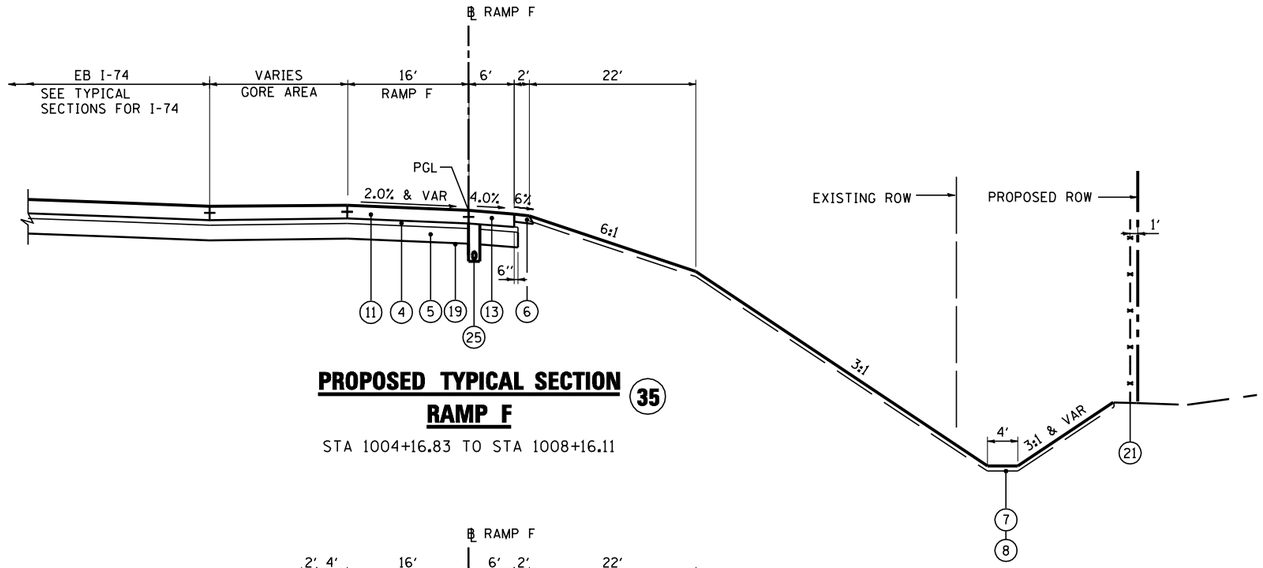

PROPOSED TYPICAL SECTION 35
RAMP F

STA 1004+16.83 TO STA 1008+16.11

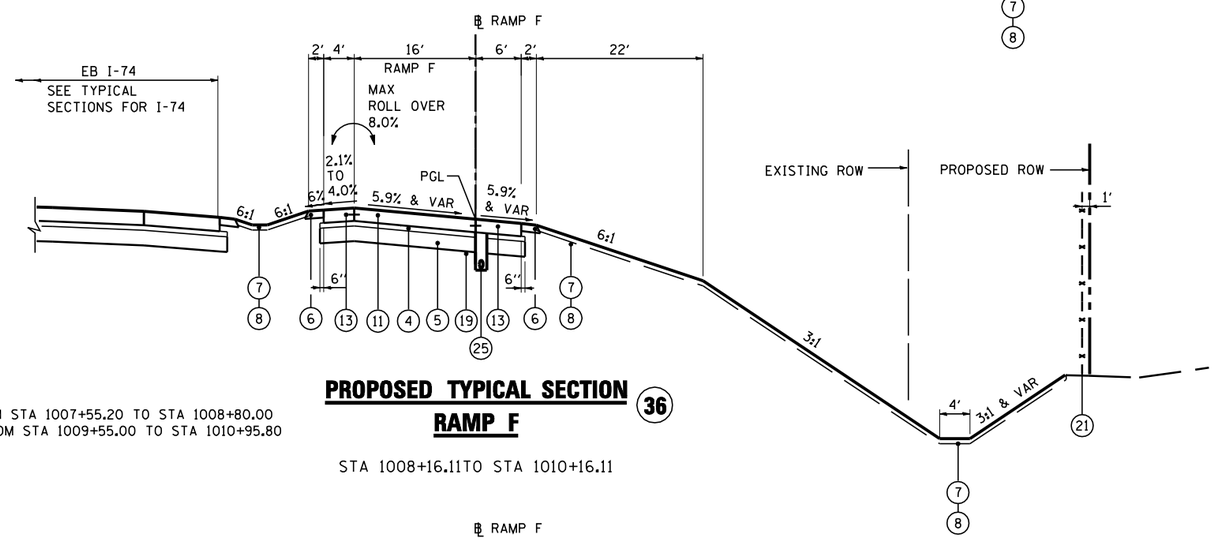

SE TRANSITION IN FROM STA 1007+55.20 TO STA 1008+80.00
SE TRANSITION OUT FROM STA 1009+55.00 TO STA 1010+95.80

PROPOSED TYPICAL SECTION 36
RAMP F

STA 1008+16.11TO STA 1010+16.11

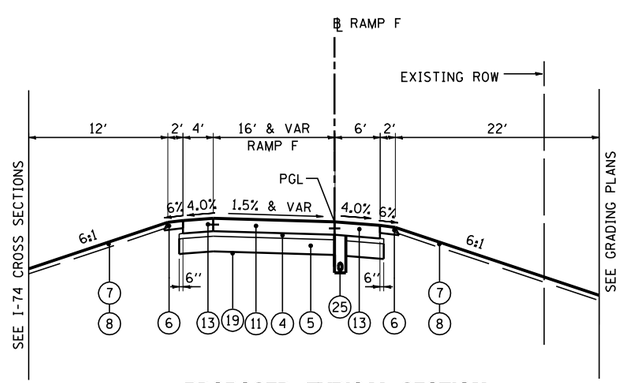

PROPOSED TYPICAL SECTION 37
RAMP F

STA 1010+16.11 TO STA 1013+27.32

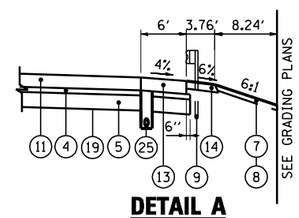

DETAIL A

STA 1006+96.79 TO STA 1013+41.06

PROPOSED LEGEND:

1. CONTINUOUSLY REINFORCED PORTLAND CEMENT CONCRETE PAVEMENT 11"
2. PORTLAND CEMENT CONCRETE SHOULDERS 11"
3. CONCRETE BARRIER, DOUBLE FACE, 42 INCH HEIGHT
4. STABILIZED SUBBASE - HOT-MIX ASPHALT, 4"
5. AGGREGATE SUBGRADE IMPROVEMENT 12"
6. AGGREGATE SHOULDERS, TYPE B 6"
7. TOPSOIL EXCAVATION AND PLACEMENT, 4"
8. SEEDING, CLASS _ (SEE EROSION AND SEDIMENT CONTROL PLANS)
9. STEEL PLATE BEAM GUARDRAIL, TYPE A, 6 FOOT POSTS
10. PORTLAND CEMENT CONCRETE PAVEMENT 10 1/4" (JOINTED)
11. PORTLAND CEMENT CONCRETE PAVEMENT 10" (JOINTED)
12. PORTLAND CEMENT CONCRETE SHOULDERS 10 1/4"
13. PORTLAND CEMENT CONCRETE SHOULDERS 10"
14. GUARDRAIL AGGREGATE EROSION CONTROL
15. CONCRETE BARRIER, SINGLE FACE, 42 INCH HEIGHT
16. COMBINATION CONCRETE CURB & GUTTER, TYPE B-6.24
17. NOT USED
18. CONCRETE BARRIER, DOUBLE FACE, 48 INCH HEIGHT
19. GEOTECHNICAL FABRIC FOR GROUND STABILIZATION
20. PIPE UNDERDRAINS 6"
21. CHAIN LINK FENCE, 4'
22. DRAINAGE STRUCTURE - TYPE 4, TY20 GRATE
23. STORM SEWER (SIZE VARIES)
24. LIGHT POLE FOUNDATION (SEE LIGHTING PLANS)
25. PIPE UNDERDRAINS 4"

PAVEMENT DESIGN MORTON RAMP TYPICAL SECTIONS

STRUCTURAL DESIGN TRAFFIC: Year 2024

PV = 11,190 SU = 790 SU = 1,185

ROAD CLASSIFICATION CLASS I

PERCENT OF STRUCTURAL DESIGN TRAFFIC IN DESIGN LANE:

P = 100% S = 100% M = 100%

TRAFFIC FACTOR: Actual TF = 18.81 AC Type = N/A

Minimum TF = 11.17

PG GRADE: Binder = N/A Surface = N/A

SUBGRADE SUPPORT RATING:

SSR = POOR

NOTE:
SEE CROSS SECTIONS FOR DETAILED GRADING

FILE NAME =	DESIGNED - I S	REVISED -	
...\D468620-sht_Pr_Typ_Morton_Ramps_F_01.dgn	DRAWN - TMB	REVISED -	
USER NAME = jreambillo	CHECKED - JNR	REVISED -	
PLOT DATE = 7/26/2012	DATE - JULY 20, 2012	REVISED -	

benesch
engineers · scientists · planners

STATE OF ILLINOIS
DEPARTMENT OF TRANSPORTATION

PROPOSED TYPICAL SECTIONS
MORTON AVE RAMPS

SCALE: NTS | SHEET NO. 5 OF 6 SHEETS | STA. | TO STA.

F.A.I. RTE.	SECTION	COUNTY	TOTAL SHEETS	SHEET NO.
•	90-(14R;(14HB-4,14,14HVB)BR)	TAZEWELL	2433	67
		CONTRACT NO. 68620		
	ILLINOIS FED. AID PROJECT			

• 74 & 155

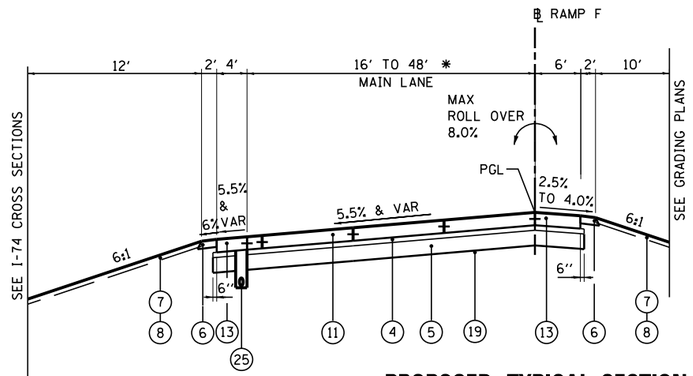

* BEGIN TAPER
AT STA 1011+70.00
END TAPER AT STA 1016+50.00

PROPOSED TYPICAL SECTION 38
RAMP F

STA 1013+27.32 TO STA 1015+27.49

SE TRANSITION IN FROM STA 1010+95.80 TO STA 1014+15.00
SE TRANSITION OUT FROM STA 1014+15.00 TO STA 1018+51.80

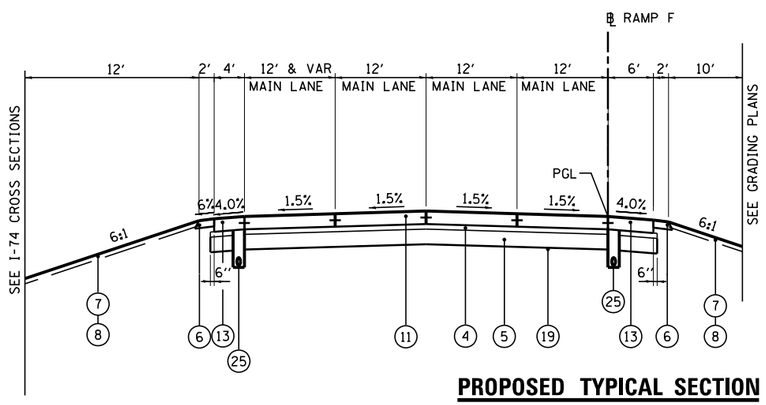

PROPOSED TYPICAL SECTION 39
RAMP F

STA 1015+27.49 TO STA 1019+84.09

PROPOSED LEGEND:

1. CONTINUOUSLY REINFORCED PORTLAND CEMENT CONCRETE PAVEMENT 11"
2. PORTLAND CEMENT CONCRETE SHOULDERS 11"
3. CONCRETE BARRIER, DOUBLE FACE, 42 INCH HEIGHT
4. STABILIZED SUBBASE - HOT-MIX ASPHALT, 4"
5. AGGREGATE SUBGRADE IMPROVEMENT 12"
6. AGGREGATE SHOULDERS, TYPE B 6"
7. TOPSOIL EXCAVATION AND PLACEMENT, 4"
8. SEEDING, CLASS _ (SEE EROSION AND SEDIMENT CONTROL PLANS)
9. STEEL PLATE BEAM GUARDRAIL, TYPE A, 6 FOOT POSTS
10. PORTLAND CEMENT CONCRETE PAVEMENT 10 1/4" (JOINTED)
11. PORTLAND CEMENT CONCRETE PAVEMENT 10" (JOINTED)
12. PORTLAND CEMENT CONCRETE SHOULDERS 10 1/4"
13. PORTLAND CEMENT CONCRETE SHOULDERS 10"
14. GUARDRAIL AGGREGATE EROSION CONTROL
15. CONCRETE BARRIER, SINGLE FACE, 42 INCH HEIGHT
16. COMBINATION CONCRETE CURB & GUTTER, TYPE B-6.24
17. NOT USED
18. CONCRETE BARRIER, DOUBLE FACE, 48 INCH HEIGHT
19. GEOTECHNICAL FABRIC FOR GROUND STABILIZATION
20. PIPE UNDERDRAINS 6"
21. CHAIN LINK FENCE, 4'
22. DRAINAGE STRUCTURE - TYPE 4, TY20 GRATE
23. STORM SEWER (SIZE VARIES)
24. LIGHT POLE FOUNDATION (SEE LIGHTING PLANS)
25. PIPE UNDERDRAINS 4"

PAVEMENT DESIGN MORTON RAMP TYPICAL SECTIONS

STRUCTURAL DESIGN TRAFFIC: Year 2024

PV = 11,190 SU = 790 SU = 1,185

ROAD CLASSIFICATION CLASS I

PERCENT OF STRUCTURAL DESIGN TRAFFIC IN DESIGN LANE:

P = 100% S = 100% M = 100%

TRAFFIC FACTOR: Actual TF = 18.81 AC Type = N/A

Minimum TF = 11.17

PG GRADE: Binder = N/A Surface = N/A

SUBGRADE SUPPORT RATING:

SSR = POOR

NOTE:
SEE CROSS SECTIONS FOR DETAILED GRADING

FILE NAME =	DESIGNED - I S	REVISED -	
...\D468620-sht_Pr_Typ_Morton_Ramps_F_02.dgn	DRAWN - TMB	REVISED -	
USER NAME = tblank	CHECKED - JNR	REVISED -	
PLOT DATE = 7/17/2012	DATE - JULY 20, 2012	REVISED -	

benesch
engineers · scientists · planners

STATE OF ILLINOIS
DEPARTMENT OF TRANSPORTATION

PROPOSED TYPICAL SECTIONS
MORTON AVE RAMPS

SCALE: NTS | SHEET NO. 6 OF 6 SHEETS | STA. | TO STA.

F.A.I. RTE.	SECTION	COUNTY	TOTAL SHEETS	SHEET NO.
•	90-(14R;(14HB-4,14,14HVB)BR)	TAZEWELL	2433	68
		CONTRACT NO. 68620		
	ILLINOIS	FED. AID PROJECT		

• 74 & 155

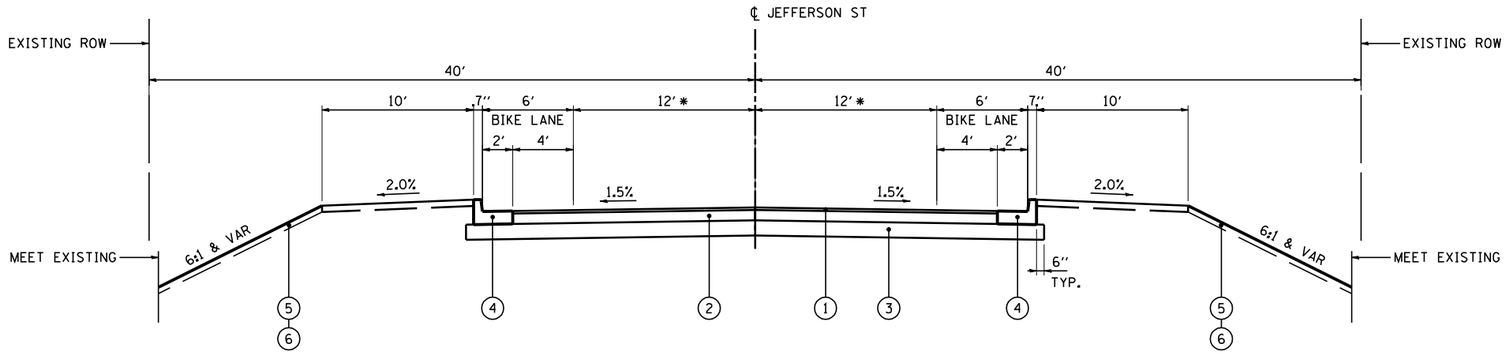

PROPOSED TYPICAL SECTION 40
JEFFERSON STREET

STA 18+71.86 TO STA 28+50
* VARIES: 14′ STA 18+94.95 TO STA 20+56.70
14′ TO 12′ STA 20+56.70 TO STA 21+36.70
12′ STA 21+36.70 TO STA 27+68.32
12′ & VARIES STA 27+68.32 TO STA 28+50.00

PROPOSED LEGEND:

1. HOT-MIX ASPHALT SURFACE COURSE, 2″
2. HOT-MIX ASPHALT BINDER COURSE, 8 1/4 ″
3. SUBBASE GRANULAR MATERIAL, TYPE A 12″
4. COMBINATION CONCRETE CURB AND GUTTER, TYPE B-6.24
5. TOPSOIL FURNISH AND PLACE, 4″
6. SEEDING, CLASS 2A

PAVEMENT DESIGN JEFFERSON STREET

STRUCTURAL DESIGN TRAFFIC: Year 2025

PV = 5184 SU = 146 SU = 70

ROAD CLASSIFICATION CLASS II

PERCENT OF STRUCTURAL DESIGN TRAFFIC IN DESIGN LANE:

P = 50% S = 50% M = 50%

TRAFFIC FACTOR: Actual TF = 0.44 AC Type = 20

Minimum TF = 3.17

PG GRADE: Binder = PG 64-22 Surface = PG 64-22

SUBGRADE SUPPORT RATING:

SSR = POOR (Sta. 18+71.86 to 28+50.00)

FILE NAME =	DESIGNED - EJA	REVISED -	
...\D468620-sht_Pr_Typ_JeffJack_01.dgn	DRAWN - TMB	REVISED -	
USER NAME = jreambillo	CHECKED - JNR	REVISED -	
PLOT DATE = 7/25/2012	DATE - JULY 20, 2012	REVISED -	

benesch
engineers · scientists · planners

STATE OF ILLINOIS
DEPARTMENT OF TRANSPORTATION

PROPOSED TYPICAL SECTIONS
JEFFERSON ST

SCALE: NTS | SHEET NO. 1 OF 1 SHEETS | STA. TO STA.

F.A.I. RTE.	SECTION	COUNTY	TOTAL SHEETS	SHEET NO.
•	90-(14R;(14HB-4,14,14HVB)BR)	TAZEWELL	2433	69
		CONTRACT NO. 68620		
	ILLINOIS FED. AID PROJECT			

• 74 & 155

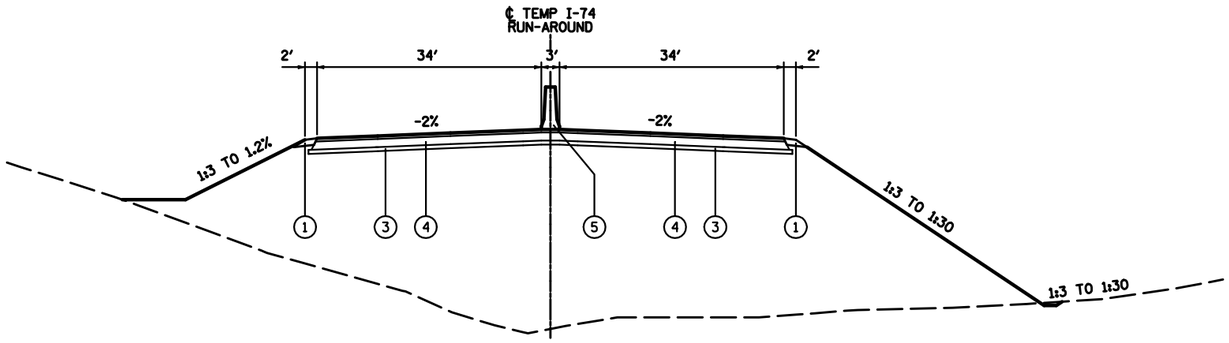

PROPOSED TYPICAL SECTION
TEMPORARY I-74 (RUN-AROUND)

STA 700+00.00 TO STA 735+34.65 (I-74 STA 517+80.78 TO 552+00.00)

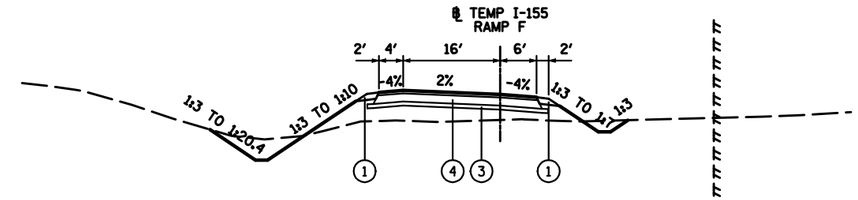

PROPOSED TYPICAL SECTION
TEMPORARY I-74 RAMP F

STA 800+00.00 TO STA 833+72.82

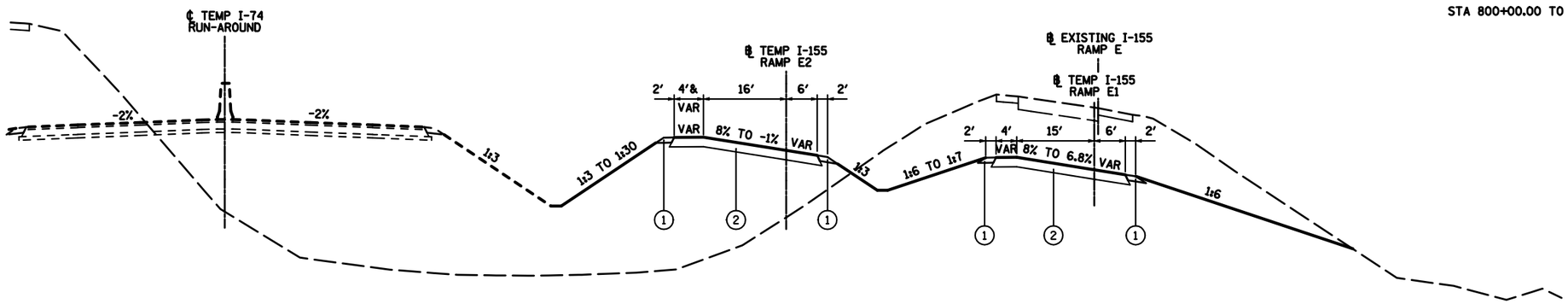

PROPOSED TYPICAL SECTION
I-155 TEMPORARY RAMP E1 & E2

TEMP RAMP E1 STA 1200+00.00 TO 1206+75.00
TEMP RAMP E2 STA 900+00.00 TO 909+82.75

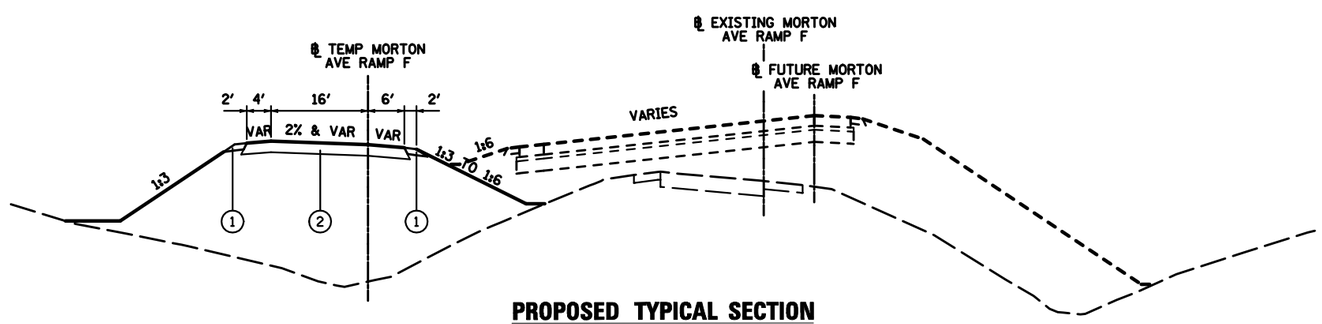

PROPOSED TYPICAL SECTION
MORTON AVENUE TEMPORARY RAMP F

STA 2000+00.00 TO STA 2013+64.04

PROPOSED LEGEND:

1. AGGREGATE SHOULDERS, TYPE B 6"
2. TEMPORARY PAVEMENT (10-3/4" HMA BASE COURSE)
3. AGGREGATE SUBGRADE IMPROVEMENT 8"
4. TEMPORARY PAVEMENT (8-1/2" HMA BASE COURSE & 2-1/4" HMA SURFACE)
5. TEMPORARY CONCRETE BARRIER

NOTES:

1. SEE CROSS SECTIONS FOR DETAILED GRADING
2. SEE SPECIAL PROVISION FOR TEMPORAY PAVEMENT
3. SEE TEMPORARY PAVEMENT DETAIL SHEET FOR ADDITIONAL INFORMATION

FILE NAME =	DESIGNED - BB	REVISED -	TERRA ENGINEERING LTD.	STATE OF ILLINOIS DEPARTMENT OF TRANSPORTATION	MAINTENANCE OF TRAFFIC TYPICAL SECTIONS - TEMPORARY	F.A.I. RTE.	SECTION	COUNTY	TOTAL SHEETS	SHEET NO.
D468620-sht-typical-temp.dgn	DRAWN - BB	REVISED -				•	90-(14R);(14HB-4,14,14HVB)BRJ	TAZEWELL	2433	70
USER NAME = TERRA	CHECKED - DA/LVA	REVISED -						CONTRACT NO. 68620		
PLOT DATE = 7/16/2012	DATE - 7/20/2012	REVISED -			SCALE: SHEET NO. 1 OF 1 SHEETS STA. TO STA.		ILLINOIS FED. AID PROJECT			

• 74 & 155

INTERSTATE PAVEMENT

LOCATION			AGGREGATE SUBGRADE IMPROVEMENT 12"	STABILIZED SUBBASE - HOT-MIX ASPHALT, 4"	GEOTECHNICAL FABRIC FOR GROUND STABILIZATION	WHITEWASHING FOR CONCRETE PAVEMENT	BITUMINOUS MATERIALS (PRIME COAT)	PORTLAND CEMENT CONCRETE PAVEMENT 10" (JOINTED)	PORTLAND CEMENT CONCRETE PAVEMENT 10 1/4" (JOINTED)	PROTECTIVE COAT	BRIDGE APPROACH PAVEMENT CONNECTOR (PCC)	CONTINUOUSLY REINFORCED PORTLAND CEMENT CONCRETE PAVEMENT 11"	PAVEMENT REINFORCEMENT
ROAD	STATION FROM	STATION TO	(SQ YD)	(SQ YD)	(SQ YD)	(SQ YD)	(TON)	(SQ YD)	(SQ YD)	(SQ YD)	(SQ YD)	(SQ YD)	(SQ YD)
I-74	464+54.59	471+00.00	5,071	5,071	5,071	5,071	10			5,493		2,582	2,582
I-74	471+00.00	486+00.00	19,527	19,527	19,527	19,527	39			20,534		11,200	11,200
I-74	486+00.00	501+00.00	21,459	21,459	21,459	21,459	43			22,184		14,021	14,021
I-74	501+00.00	516+00.00	23,024	23,024	23,024	23,024	46			24,020		15,932	15,932
I-74	516+00.00	531+00.00	21,940	21,940	21,940	21,940	44			22,826		14,087	14,087
I-74	531+00.00	546+00.00	20,377	20,377	20,377	20,377	41			21,141		12,518	12,518
I-74	546+00.00	561+00.00	18,051	18,051	18,051	18,051	36			16,753	1,994	9,667	9,667
I-74	561+00.00	576+00.00	14,203	14,203	14,203	14,203	28			13,020	2,257	6,824	6,824
I-74	576+00.00	591+00.00	18,633	18,633	18,633	18,633	37			19,400		11,333	11,333
I-74	591+00.00	606+00.00	8,119	8,119	8,119	8,119	16			7,952		4,619	4,619
I-74	606+00.00	621+00.00	1,816	1,816	1,816	1,816	4			1,791		967	967
I-155	00+00.00	13+00.00	9,461	9,461	9,461	9,461	19		2,954	8,950	736		
I-155	13+00.00	28+00.00	17,539	17,539	17,539	17,539	35		9,449	17,603			
I-155	28+00.00	35+90.00	8,290	8,290	8,290	8,290	17		4,601	8,114			
Ramp E (I-155)	200+00.00	214+00.00	2,911	2,911	2,911	2,911	6		1,762	2,816			
Ramp E (I-155)	214+00.00	229+00.00	1,649	1,649	1,649	1,649	3		1,051	1,598			
Ramp F (I-155)	311+00.00	326+00.00	6,988	6,988	6,988	6,988	14		3,819	6,840			
Ramp F (I-155)	326+00.00	341+00.00	6,058	6,058	6,058	6,058	12		3,428	5,936			
Ramp G (I-155)	10+00.00	25+00.00	3,209	3,209	3,209	3,209	6		1,952	3,102			
Ramp G (I-155)	25+00.00	39+33.16	4,332	4,332	4,332	4,332	9		2,205	4,860			
Ramp H (I-155)	100+00.00	115+00.00	3,489	3,489	3,489	3,489	7		2,065	3,360			
Ramp H (I-155)	115+00.00	130+00.00	4,279	4,279	4,279	4,279	9		2,617	4,132			
Ramp B (Mort. Ave.)	04+01.99	10+00.00	764	764	764	764	2	426		1,224			
Ramp D (Mort. Ave.)	1000+00.00	1112+00.00	3,182	3,182	3,182	3,182	6	1,856		2,532			
Ramp D (Mort. Ave.)	1112+00.00	1124+03.28	2,420	2,420	2,420	2,420	5	1,526		2,801			
Ramp E (Mort. Ave.)	10+00.00	20+00.00	1,887	1,887	1,887	1,887	4	1,145		1,462			
Ramp E (Mort. Ave.)	20+00.00	32+41.53	2,415	2,415	2,415	2,415	5	1,506		1,817			
Ramp F (Mort. Ave.)	1000+00.00	1011+00.00	1,988	1,988	1,988	1,988	4	1,222		2,438			
Ramp F (Mort. Ave.)	1011+00.00	1021+10.65	5,163	5,163	5,163	5,163	10	4,085		4,912			
		TOTAL	258,244	258,244	258,244	258,244	517	11,766	35,903	259,611	4,987	103,750	103,750

SHOULDERS

LOCATION			AGGREGATE SHOULDERS, TYPE B 6"	PORTLAND CEMENT CONCRETE SHOULDERS 10"	PORTLAND CEMENT CONCRETE SHOULDERS 10 1/4"	PORTLAND CEMENT CONCRETE SHOULDERS 11"	SHOULDER RUMBLE STRIPS, 16 INCH
ROAD	STATION FROM	STATION TO	(SQ YD)	(SQ YD)	(SQ YD)	(SQ YD)	(FOOT)
I-74	464+54.59	471+00.00	110			2,525	1,291
I-74	471+00.00	486+00.00	501			7,919	5,600
I-74	486+00.00	501+00.00	416			6,771	6,000
I-74	501+00.00	516+00.00	362			6,596	5,070
I-74	516+00.00	531+00.00	615			7,202	4,864
I-74	531+00.00	546+00.00	550			7,208	5,338
I-74	546+00.00	561+00.00	331			5,761	4,118
I-74	561+00.00	576+00.00	41			5,053	4,390
I-74	576+00.00	591+00.00	533			6,732	4,404
I-74	591+00.00	606+00.00	667			3,333	3,000
I-74	606+00.00	621+00.00	110			824	458
I-155	00+00.00	13+00.00	372		5,312		4,056
I-155	13+00.00	28+00.00	900		7,679		5,141
I-155	28+00.00	35+90.00	703		3,513		3,161
Ramp E (I-155)	200+00.00	214+00.00	380		1,054		
Ramp E (I-155)	214+00.00	229+00.00	196		547		
Ramp F (I-155)	311+00.00	326+00.00	589		3,021		
Ramp F (I-155)	326+00.00	341+00.00	481		2,508		
Ramp G (I-155)	10+00.00	25+00.00	429		1,150		
Ramp G (I-155)	25+00.00	39+33.16	339		1,695		
Ramp H (I-155)	100+00.00	115+00.00	517		1,295		
Ramp H (I-155)	115+00.00	130+00.00	581		1,515		
Morton Ave.	26+94.00	33+00.00	148	798			
Morton Ave.	33+00.00	39+00.00	126	676			
Morton Ave.	39+00.00	45+00.00	195	1,275			
Morton Ave.	45+00.00	49+30.67	54	317			
Ramp B (Mort. Ave.)	04+01.99	10+00.00	104	311			
Ramp D (Mort. Ave.)	1000+00.00	1112+00.00	431	1,216			
Ramp D (Mort. Ave.)	1112+00.00	1124+03.28	267	827			
Ramp E (Mort. Ave.)	10+00.00	20+00.00	251	679			
Ramp E (Mort. Ave.)	20+00.00	32+41.53	304	831			
Ramp F (Mort. Ave.)	1000+00.00	1011+00.00	157	703			
Ramp F (Mort. Ave.)	1011+00.00	1021+10.65	338	980			
Jefferson St.	18+71.86	20+50.00					
Jefferson St.	20+50.00	26+50.00					
Jefferson St.	26+50.00	28+50.00					
Jackson St.	38+00.00	44+00.00	44				
		TOTAL	12,142	8,613	29,289	59,924	56,891

NON-INTERSTATE PAVEMENT

LOCATION			SUBBASE GRANULAR MATERIAL, TYPE A 4"	SUBBASE GRANULAR MATERIAL, TYPE A 12"	HOT-MIX ASPHALT BINDER COURSE, IL-19.0, N50	HOT-MIX ASPHALT SURFACE COURSE, MIX "D", N50	BITUMINOUS MATERIALS (PRIME COAT)	PORTLAND CEMENT CONCRETE PAVEMENT10" (JOINTED)	PROTECTIVE COAT	CLASS D PATCHES, TYPE III, 6 INCH	CLASS D PATCHES, TYPE IV, 16 INCH
ROAD	STATION FROM	STATION TO	(SQ YD)	(SQ YD)	(TON)	(TON)	(TON)	(SQ YD)	(SQ YD)	(SQ YD)	(SQ YD)
Morton Ave.	26+94.00	33+00.00	6,309	6,309				4,870	7,261		
Morton Ave.	33+00.00	39+00.00	4,624	4,624				3,554	5,163		
Morton Ave.	39+00.00	45+00.00	5,915	5,915				4,029	7,464		
Morton Ave.	45+00.00	49+30.67	4,240	4,240				3,025	3,577		
Jefferson St.	18+71.86	20+50.00		836	342	83	2		433		
Jefferson St.	20+50.00	26+50.00		2,565	1,031	250	5		1,627		
Jefferson St.	26+50.00	28+50.00		850	341	83	2		964	22	
Jackson St.	38+00.00	44+00.00		80					679		80
		TOTAL	21,088	25,419	1,714	416	9	15,478	27,168	22	80

MEDIAN, CURB & GUTTER

LOCATION			COMBINATION CURB AND GUTTER, TYPE B-6.06	COMBINATION CURB AND GUTTER, TYPE B-6.12	COMBINATION CURB AND GUTTER, TYPE B-6.18	COMBINATION CURB AND GUTTER, TYPE B-6.24	CONCRETE MEDIAN SURFACE, 4 INCH	CONCRETE MEDIAN, TYPE SB-6.24	CORRUGATED MEDIAN	PRISMATIC CURB REFLECTOR
ROAD	STATION FROM	STATION TO	(FOOT)	(FOOT)	(FOOT)	(FOOT)	(SQ FT)	(SQ FT)	(SQ FT)	(EACH)
Morton Ave.	26+94.00	33+00.00				1,587	8,943	497		35
Morton Ave.	33+00.00	39+00.00	18	22	39	444	3,389	3,466		65
Morton Ave.	39+00.00	45+00.00	58			1,251	9,190		6,299	59
Morton Ave.	45+00.00	49+30.67				519	519			14
Jefferson St.	18+71.86	20+50.00				356				
Jefferson St.	20+50.00	26+50.00				1,200				
Jefferson St.	26+50.00	28+50.00				400				
Jackson St.	38+00.00	44+00.00								
		TOTAL	76	22	39	5,757	22,041	3,963	6,299	173

GUARDRAIL RELATED ITEMS

LOCATION			STEEL PLATE BEAM GUARD RAIL, TYPE A, 6 FOOT POSTS	TRAFFIC BARRIER TERMINAL, TYPE 2	TRAFFIC BARRIER TERMINAL, TYPE 5	TRAFFIC BARRIER TERMINAL, TYPE 6	TRAFFIC BARRIER TERMINAL, TYPE 1 (SPECIAL) TANGENT	STEEL PLATE BEAM GUARDRAIL (SHORT RADIUS)	REMOVE AND REERECT STEEL PLATE BEAM GUARDRAILS, TYPE A	REMOVE AND REERECT TRAFFIC BARRIER TERMINALS, TYPE 1	GUARDRAIL MARKERS, TYPE A	TERMINAL MARKER - DIRECT APPLIED	GUARDRAIL AGGREGATE EROSION CONTROL
ROAD	STATION FROM	STATION TO	(FOOT)	(EACH)	(EACH)	(EACH)	(EACH)	(FOOT)	(FOOT)	(EACH)	(EACH)	(EACH)	(TON)
I-74	464+54.59	471+00.00	315.63	1			1				5	1	77
I-74	471+00.00	486+00.00	386.25	1			2				8	2	104
I-74	486+00.00	501+00.00	938.75	3			2				6	2	215
I-74	501+00.00	516+00.00	256.25	2			2				8	2	82
I-74	516+00.00	531+00.00											
I-74	531+00.00	546+00.00	178.13	1			1				4	1	50
I-74	546+00.00	561+00.00	733.98	1	2	2	1				7	1	175
I-74	561+00.00	576+00.00	1997.08	1	2	2					9		403
I-74	576+00.00	591+00.00	578.13	1			2					2	13
I-74	591+00.00	606+00.00											
I-74	606+00.00	621+00.00											
I-155	00+00.00	13+00.00	206.25			2	2				8	2	77
I-155	13+00.00	28+00.00		0							4		51
I-155	28+00.00	35+90.00	178.13										
I-155	45+00	60+00	103.13				1				4	1	35
Ramp E (I-155)	200+00.00	214+00.00											
Ramp E (I-155)	214+00.00	229+00.00											
Ramp F (I-155)	311+00.00	326+00.00											
Ramp F (I-155)	326+00.00	341+00.00											
Ramp G (I-155)	10+00.00	25+00.00											
Ramp G (I-155)	25+00.00	39+33.16											
Ramp H (I-155)	100+00.00	115+00.00											
Ramp H (I-155)	115+00.00	130+00.00											
Morton Ave.	26+94.00	33+00.00									4		
Morton Ave.	33+00.00	39+00.00	110.13	1		1		50					24
Morton Ave.	39+00.00	45+00.00	193.43				1				4	1	51
Morton Ave.	45+00.00	49+30.67	103.13	1			1				4	1	35
Ramp B (Mort. Ave.)	04+01.99	10+00.00											
Ramp D (Mort. Ave.)	1000+00.00	1112+00.00											
Ramp D (Mort. Ave.)	1112+00.00	1124+03.28											
Ramp E (Mort. Ave.)	10+00.00	20+00.00											
Ramp E (Mort. Ave.)	20+00.00	32+41.53											
Ramp F (Mort. Ave.)	1000+00.00	1011+00.00									5		81
Ramp F (Mort. Ave.)	1011+00.00	1021+10.65		0							4		46
Jefferson St.	18+71.86	20+50.00											
Jefferson St.	20+50.00	26+50.00											
Jefferson St.	26+50.00	28+50.00											
Jackson St.	38+00.00	44+00.00							37.5	2			
		TOTAL	6,278	13	4	7	16	50	37.5	2	84	16	1,519

ROW MARKERS

LOCATION			FURNISHING AND ERECTING RIGHT-OF-WAY MARKERS
ROAD	STATION	OFFSET	(EACH)
I-74	473+00.00	140.00' LT	1
I-74	473+00.00	140.00' RT	1
I-74	475+00.00	150.00' RT	1
I-74	476+00.00	150.00' LT	1
I-74	480+00.00	150.00' RT	1
I-74	482+00.00	150.00' LT	1
I-74	482+00.00	140.00' RT	1
I-74	484+19.62	116.16 LT	1
I-74	493+35.00	125.00' LT	1
I-74	496+10.00	145.00' LT	1
I-74	497+00.00	145.00' LT	1
I-74	499+00.00	160.00' RT	1
I-74	501+00.00	160.00' LT	1
I-74	501+00.00	160.00' RT	1
I-74	501+20.00	155.00' LT	1
I-74	502+00.00	145.00' RT	1
I-74	505+00.00	120.00' RT	1
I-74	506+00.00	139.57' LT	1
I-74	506+00.00	135.00' RT	1
I-74	509+00.00	155.00' LT	1
I-74	509+00.00	146.00' RT	1
I-74	510+87.18	145.65' LT	1
I-74	512+00.00	138.00' LT	1
I-74	515+00.00	146.00' LT	1
I-74	515+00.00	140.00' RT	1
I-74	516+00.00	145.00' LT	1
I-74	517+00.00	160.00' LT	1
I-74	518+00.00	150.00' RT	1
I-74	519+00.00	140.00' RT	1
I-74	521+00.00	395.00' LT	1
I-74	523+04.86	160.00' RT	1
I-74	525+00.00	167.00' RT	1
I-74	525+42.22	699.07' LT	1
I-74	526+00.00	170.84' RT	1
I-74	526+17.61	740.00' LT	1
I-74	540+00.00	450.00' LT	1
I-74	540+55.72	339.17' LT	1
I-74	541+50.00	145.00' LT	1
I-74	542+00.00	145.00' LT	1
I-74	544+75.66	155.01' LT	1
I-74	545+00.00	155.00' LT	1
I-74	546+00.00	160.00' LT	1
I-74	547+00.00	145.00' LT	1
I-74	549+82.52	140.00' LT	1
I-74	550+00.00	169.94' RT	1
I-74	551+00.00	185.00' RT	1
I-74	551+67.43	188.60' RT	1
I-74	553+00.00	167.00' LT	1
I-74	553+00.00	178.70' RT	1
I-74	555+00.00	172.00' LT	1
I-74	555+97.22	172.00' LT	1
I-74	556+00.00	177.36' RT	1
I-74	558+00.00	146.47' RT	1
I-74	559+88.76	142.44' RT	1
I-74	561+25.92	150.00' RT	1
I-74	567+85.00	145.00' RT	1
I-74	568+46.07	130.00' RT	1
I-74	570+00.00	140.00' LT	1
I-74	573+62.50	149.96' RT	1
I-74	574+50.00	165.00' LT	1
I-74	574+55.84	158.97' RT	1
I-74	575+00.00	163.00' RT	1

ROW MARKERS

LOCATION			FURNISHING AND ERECTING RIGHT-OF-WAY MARKERS
ROAD	STATION	OFFSET	(EACH)
I-74	576+00.00	174.00' RT	1
I-74	578+00.00	181.00' RT	1
I-74	579+00.00	183.00' RT	1
I-74	579+00.00	160.00' LT	1
I-74	582+19.96	175.00' RT	1
I-74	582+22.26	145.00' LT	1
I-74	584+50.14	180.00' RT	1
I-74	585+35.06	196.48' RT	1
I-74	586+10.31	196.22' RT	1
I-74	587+11.92	207.06' RT	1
I-74	587+49.49	226.05' RT	1
I-74	588+04.62	235.62' RT	1
I-74	593+66.36	770.99' LT	1
I-74	593+76.32	945.04' LT	1
I-74	593+83.32	1084.73' LT	1
I-74	593+90.01	990.28' LT	1
I-74	594+09.21	1187.61' LT	1
I-155	09+66.25	240.63' LT	1
I-155	10+38.82	245.84' RT	1
I-155	10+90.00	207.00' LT	1
I-155	11+75.00	195.00' LT	1
I-155	12+00.00	207.00' RT	1
I-155	12+96.03	189.83' RT	1
I-155	13+70.50	190.00' LT	1
I-155	14+00.00	170.00' LT	1
I-155	14+00.00	170.00' RT	1
I-155	16+00.00	150.00' RT	1
I-155	17+00.00	150.00' LT	1
I-155	17+34.75	143.87' RT	1
I-155	18+00.00	140.00' RT	1
I-155	18+00.00	145.00' LT	1
I-155	19+73.90	131.34' LT	1
I-155	20+95.00	110.55' RT	1
I-155	23+00.00	106.96' LT	1
I-155	23+99.16	107.39' LT	1
I-155	27+41.63	122.00' LT	1
I-155	28+00.00	125.00' LT	1
I-155	28+72.69	109.45' LT	1
		TOTAL	100

WICK DRAINS AND SETTLEMENT PLATFORMS

LOCATION	WICK DRAINS	SETTLEMENT PLATFORMS	SAND DRAINAGE BLANKET
	(FOOT)	(EACH)	(CU YD)
South of I-74 Along Temp. Run-Around, I-155, & Ramp E	207,440	7	35,728
North of I-74 Along Ramps G & H	165,612	4	34,032
Through Existing Railroad	18,807	2	4,859
TOTAL	391,859	13	74,619

PARTIAL DEPTH REMOVAL 2"

LOCATION	PARTIAL DEPTH REMOVAL 2"
	(SQ YD)
Northbound Morton Ave.	490
Southbound Morton Ave.	546
Ramp C at Morton Ave.	8
Ramp A at Morton Ave.	16
Ramp F at Morton Ave.	13
Ramp D at Morton Ave.	11
Ramp B at Morton Ave.	37
Ramp E at Morton Ave.	11
TOTAL	1132

BARRIERS & ATTENUATORS

LOCATION			CONCRETE BARRIER, DOUBLE FACE, 42 INCH HEIGHT	CONCRETE BARRIER, SINGLE FACE, 42 INCH HEIGHT	CONCRETE BARRIER, DOUBLE FACE, 48 INCH HEIGHT	CONCRETE BARRIER BASE	CONCRETE BARRIER TRANSITION	DELINEATORS	MONODIRECTIONAL PRISMATIC BARRIER REFLECTOR	EROSION CONTROL CURB	IMPACT ATTENUATORS (FULLY REDIRECTIVE, NARROW), TEST LEVEL 3	IMPACT ATTENUATORS (FULLY REDIRECTIVE, WIDE), TEST LEVEL 3	ATTENUATOR BASE
ROAD	STATION FROM	STATION TO	(FOOT)	(FOOT)	(FOOT)	(FOOT)	(FOOT)	(EACH)	(EACH)	(FOOT)	(EACH)	(EACH)	(SY YD)
I-74	464+54.59	471+00.00			364	364	15	2	2				
I-74	471+00.00	486+00.00			1,335	1,335		6	6		2		
I-74	486+00.00	501+00.00			1,313	1,313	30	17	8				
I-74	501+00.00	516+00.00			1,408	1,408		20	8				
I-74	516+00.00	531+00.00			1,450	1,450		13	14				
I-74	531+00.00	546+00.00			1,335	1,335	72	14	18				
I-74	546+00.00	561+00.00			1,250	1,250		6	12	11			
I-74	561+00.00	576+00.00			1,078	1,078		6	6				
I-74	576+00.00	591+00.00			1,259	1,259		5	8			1	47
I-74	591+00.00	606+00.00						8					
I-74	606+00.00	621+00.00											
I-155	00+00.00	13+00.00	718			718	20	5	14				
I-155	13+00.00	28+00.00	498			498		3	4			1	47
I-155	28+00.00	35+90.00						8					
Ramp E (I-155)	200+00.00	214+00.00						29	1				
Ramp E (I-155)	214+00.00	229+00.00						20					
Ramp F (I-155)	311+00.00	326+00.00						26					
Ramp F (I-155)	326+00.00	341+00.00						31					
Ramp G (I-155)	10+00.00	25+00.00						35					
Ramp G (I-155)	25+00.00	39+33.16		1,127		1,127		26	18			1	40
Ramp H (I-155)	100+00.00	115+00.00						30					
Ramp H (I-155)	115+00.00	130+00.00						25					
Morton Ave.	26+94.00	33+00.00											
Morton Ave.	33+00.00	39+00.00											
Morton Ave.	39+00.00	45+00.00											
Morton Ave.	45+00.00	49+30.67											
Ramp B (Mort. Ave.)	04+01.99	10+00.00						14					
Ramp D (Mort. Ave.)	1000+00.00	1112+00.00						21					
Ramp D (Mort. Ave.)	1112+00.00	1124+03.28						12					
Ramp E (Mort. Ave.)	10+00.00	20+00.00						19					
Ramp E (Mort. Ave.)	20+00.00	32+41.53						20					
Ramp F (Mort. Ave.)	1000+00.00	1011+00.00						10					
Ramp F (Mort. Ave.)	1011+00.00	1021+10.65						18					
Jefferson St.	18+71.86	20+50.00											
Jefferson St.	20+50.00	26+50.00											
Jefferson St.	26+50.00	28+50.00											
Jackson St.	38+00.00	44+00.00											
		TOTAL	1,216	1,127	10,792	13,135	137	449	119	11	2	3	134

SURVEY MARKERS

LOCATION			PERMANENT SURVEY MARKERS, TYPE I	PERMANENT SURVEY MARKERS, TYPE II
ROAD	STATION	DESCRIPTION	(EACH)	(EACH)
I-74	465+00.00	PT. ON CENTERLINE		1
I-74	475+00.00	PT. ON CENTERLINE	1	
I-74	485+00.00	PT. ON CENTERLINE	1	
I-74	495+00.00	PT. ON CENTERLINE	1	
I-74	505+00.00	PT. ON CENTERLINE	1	
I-74	515+00.00	PT. ON CENTERLINE	1	
I-74	523+04.86	P.C.	1	
I-74	530+00.00	PT. ON CENTERLINE	1	
I-74	536+46.10	P.I.		1
I-74	543+00.00	PT. ON CENTERLINE	1	
I-74	548+84.59	P.T.	1	
I-74	555+00.00	PT. ON CENTERLINE	1	
I-74	558+84.20, 58.80' RT	PT. ON BRIDGE	1	
I-74	562+26.87	P.C.	1	
I-74	567+43.19, 59.34' RT	PT. ON BRIDGE	1	
I-74	570+00.00	PT. ON CENTERLINE	1	
I-74	576+92.67	P.I.		1
I-74	584+00.00	PT. ON CENTERLINE	1	
I-74	591+44.66	P.T.		1
I-74	600+00.00	PT. ON CENTERLINE		1
I-74	610+00.00	PT. ON CENTERLINE		1
I-155	0+00.00	P.C.	1	
I-155	2+41.60, 43.23' RT	PT. ON BRIDGE	1	
I-155	5+11.46, 48.05' LT	PT. ON BRIDGE	1	
I-155	07+65.35	P.I.	1	
I-155	15+26.05	P.T.	1	
I-155	22+00.00	PT. ON CENTERLINE		1
I-155	28+71.69	P.C.		1
I-155	38+71.27	PI.		1
		SECTION CORNERS	2	
		TOTAL	22	9

TREE REMOVAL

LOCATION	TREE REMOVAL (6 to 15 UNITS DIAMETER)	TREE REMOVAL (OVER 15 UNITS DIAMETER)	TREE REMOVAL, ACRES
	(UNIT)	(UNIT)	(ACRES)
I-74 West of I-155	480	40	
I-155 Ramp G & H	620	330	0.27
I-155 Ramp E & F	330	50	
I-74 East of I-155	230	291	0.23
Morton Interchange Ramps	351	200	
TOTAL	2011	911	0.5

ACCESS CONTROL FENCE

LOCATION				CHAIN LINK FENCE, 4'
ROAD	STATION FROM	STATION TO	SIDE	(FOOT)
I-74	473+00.00	484+19.62	LT	1,122
I-74	473+00.00	482+00.00	RT	901
I-74	493+35.00	501+20.00	LT	787
I-74	499+00.00	525+99.99	RT	2,718
I-74	542+00.00	547+00.00	LT	481
I-74	549+82.52	555+97.22	LT	616
I-74	550+00.00	559+88.76	RT	993
I-74	561+25.92	568+46.07	RT	715
I-74	569+99.98	582+22.26	LT	1,239
I-74	573+62.50	582+19.96	RT	847
I-74	584+50.14	588+04.62	RT	356
I-155	09+66.25	23+00.00	LT	1,368
I-155	23+99.16	28+72.69	LT	476
RAMP H (I-155)	100+06.91	126+02.52	RT	3,783
RAMP F (I-155)	330+55.56	341+62.16	RT	1,079
RAMP E(Mort. Ave.)	10+86.98	15+03.44	RT	422
			TOTAL	17,903

CRCP LUGS AND JOINTS

LOCATION			TRANSVERSE TERMINAL JOINT COMPLETE 24'	LUG SYSTEM COMPLETE 36'	LUG SYSTEM COMPLETE 47'
ROAD	STATION FROM	STATION TO	(EACH)	(EACH)	(EACH)
I-74	464+54.59	471+00.00		1	
I-74	471+00.00	486+00.00		1	
I-74	486+00.00	501+00.00			
I-74	501+00.00	516+00.00			
I-74	516+00.00	531+00.00			
I-74	531+00.00	546+00.00			
I-74	546+00.00	561+00.00		1	1
I-74	561+00.00	576+00.00		2	
I-74	576+00.00	591+00.00	1		
I-74	591+00.00	606+00.00			
I-74	606+00.00	621+00.00	1		
		TOTAL	2	5	1

AUTOMATIC TRAFFIC RECORDER
LOCATION: NEAR I-74 STA. 484+00

ITEM	UNIT	QUANTITY
DETECTOR LOOP, TYPE I	FOOT	1200
HEAVY DUTY HANDHOLE	EACH	4
ELECTRIC CABLE IN CONDUIT, CONOGA - 30003	FOOT	2000
UNDERGROUND CONDUIT, COILABLE NONMETALIC CONDUIT, 3" DIA.	FOOT	300
UNDERGROUND CONDUIT, COILABLE NONMETALIC CONDUIT, 1 1/4" DIA.	FOOT	250
PIEZO AXLE SENSOR, CLASS II	FOOT	66
CONTROLLER CABINET TYPE III	EACH	1
CONCRETE FOUNDATION, TYPE - D	EACH	1
SOLAR POWER ASSEMBLY	EACH	1

EARTHWORK SCHEDULE

(1) STAGE & LOCATION	(2) EARTH EXCAVATION (CU. YD.)	(3) UNSTABLE* MATERIAL (CU. YD.)	(4) EXCAVATION TO BE USED IN EMBANKMENT ADJUSTED FOR SHRINKAGE (25% FACTOR) (CU. YD.)	(5) EMBANKMENT (CU. YD.)	(6) EARTHWORK BALANCE WASTE (+) OR BORROW (-) (CU. YD.)	(7) TOPSOIL EXCAVATION (CU. YD.)	(8) TOPSOIL PLACEMENT (CU. YD.)
PRESTAGE							
TEMPORARY MORTON RAMP F							
STA. 2004+50 TO STA. 2012+50	184	0	138	353	-215	0	0
PRESTAGE- SUBSTAGE B							
MORTON AVE							
STA. 31+83.04 TO STA. 43+00	460	0	345	28	317	0	0
PRESTAGE- SUBSTAGE C							
MORTON AVE							
STA. 23+05.00 TO STA. 31+35.93	244	0	183	1	182	261	0
STA. 42+00.00 TO STA. 45+35.41	121	0	90	0	90	190	0
STAGE SUB-TOTAL	**1008**	**0**	**756**	**382**	**374**	**450**	**0**
STAGE 1							
I-74							
460+51.32 TO STA. 539+00.63	4,341	4,048	6,292	10,242	-3,950	6,335	0
STA. 541+10.22 TO STA. 549+38.99	37	0	28	1,135	-1,107	996	0
STA. 551+10.25 TO STA. 557+80.20	137	59	147	1,107	-960	804	0
STA. 559+70.36 TO STA. 567+09.94	198	896	821	921	-100	867	0
STA. 570+23.37 TO STA. 622+00.00	1,146	1,432	1,933	3,866	-1,933	3,584	0
MORTON AVE							
STA. 31+63.99 TO STA. 35+00.00	532	0	399	997	-598	244	26
STA. 38+00.00 TO STA. 42+32.80	679	0	509	381	128	291	45
MORTON RAMP E							
STA. 18+00.00 TO STA. 23+00.00	6	0	5	310	-305	310	310
MORTON RAMP F							
STA. 1015+30.00 TO STA. 1020+20	10	0	8	21,085	-21,077	962	0
TEMPORARY RAMP F							
STA. 2008+50.00 TO STA. 2013+50.00	5	0	4	14,105	-14,101	0	0
MATERIAL AVAILABLE FROM PRESTAGE - SUBSTAGE B & C			589		589		
STAGE SUB-TOTAL	**7,091**	**6,436**	**10,735**	**54,148**	**-43,413**	**14,393**	**381**
STAGE 1B							
MORTON AVE							
STA. 26+94.00 TO STA. 31+63.99	887	0	666	339	327	399	129
STA. 42+32.80 TO STA. 49+30.67	1,324	0	993	0	993	0	0
MORTON RAMP E							
STA. 16+00 TO STA. 18+27.92	108	0	81	1,142	-1,061	481	126
STAGE SUB-TOTAL	**2,319**	**0**	**1,740**	**1,481**	**259**	**880**	**255**
STAGE 2A							
I-74							
472+99.99 TO STA. 520+00	4,570	1,048	4,214	15,086	-10,872	8,862	2,838
STA. 556+50.00 TO STA. 558+09.46	376	0	282	3,501	-3,219	604	179
STA. 559+99.62TO STA. 566+88.77	1,585	461	1,535	3,597	-2,062	2,053	605
STA. 570+50.00 TO STA. 581+50.00	2,148	560	2,031	15,365	-13,334	3,905	1,110
MORTON RAMP F							
STA. 1007+00.00 TO STA. 1015+30.00	333	778	833	10,569	-9,736	2,038	404
TEMPORARY RAMP F							
STA. 800+00 TO STA. 833+00	1,941	0	1,456	8,671	-7,215	8,338	0
MATERIAL AVAILABLE FROM STAGE 1B			259		259		
STAGE SUB-TOTAL	**10,953**	**2,848**	**10,610**	**56,789**	**-46,179**	**25,801**	**5,135**
STAGE 2B							
TEMPORARY I-74							
STA. 700+00.00 TO STA. 710+46.18	77	0	58	2,257	-2,199	0	0
STAGE SUB-TOTAL	**77**	**0**	**58**	**2,257**	**-2,199**	**0**	**0**
STAGE 3A							
I-74							
STA. 464+54.72 TO STA. 511+25.00	5,700	1,282	5,237	8,174	-2,937	8,697	2,754
STA. 556+50.00 TO STA. 557+49.82	116	44	120	1,576	-1,456	232	84
STA. 559+40.43 TO STA. 566+74.46	920	405	993	3,777	-2,784	2,257	673
STA. 570+43.21 TO STA. 586+50.00	1,289	387	1,257	12,012	-10,755	4,408	1,411
MORTON RAMP E							
STA. 18+27.92 TO STA. 22+93.87	643	0	482	5,268	-4,786	1,346	362
MORTON RAMP F							
STA. 1014+50.00 TO STA. 1017+89.09	769	0	577	30	547	0	0
MORTON RAMP F INFIELD	34,450	0	25,838	3,944	21,894	7,452	0
TEMPORARY I-74							
STA. 710+46.18 TO STA. 722+50.00	6,485	0	4,864	33,706	-28,842	0	0
STAGE SUB-TOTAL	**50,372**	**2,118**	**39,368**	**68,486**	**-29,118**	**24,392**	**5,284**

(1) STAGE & LOCATION	(2) EARTH EXCAVATION (CU. YD.)	(3) UNSTABLE* MATERIAL (CU. YD.)	(4) EXCAVATION TO BE USED IN EMBANKMENT ADJUSTED FOR SHRINKAGE (25% FACTOR) (CU. YD.)	(5) EMBANKMENT (CU. YD.)	(6) EARTHWORK BALANCE WASTE (+) OR BORROW (-) (CU. YD.)	(7) TOPSOIL EXCAVATION (CU. YD.)	(8) TOPSOIL PLACEMENT (CU. YD.)
STAGE 3B							
I-74							
STA. 581+00.00 TO STA. 589+08.77	434	146	435	240	195	117	11
MORTON RAMP E							
STA. 22+93.87 TO STA. 24+50	142	0	106	322	-216	243	42
STAGE SUB-TOTAL	**576**	**146**	**541**	**562**	**-21**	**361**	**53**
STAGE 4							
I-74							
STA. 548+00.00 TO STA. 556+50.00	5,437	0	4,078	16,559	-12,481	3,554	1,119
MORTON AVE							
STA. 31+63.99 TO STA. 34+85.26	569	0	427	44	383	89	0
STA. 38+00.00 TO STA.38+56.87	130	0	98	34	64	43	11
STA. 43+00 TO STA.49+30.67	1,026	0		16		100	10
MORTON RAMP B							
STA. 4+01.99 TO STA. 9+00.00	275	0	206	1,742	-1,536	888	226
MORTON RAMP B INFIELD	202	0	152	133	19	2,120	0
MORTON RAMP E							
STA. 18+50 TO STA. 27+06.40	5,101	0	3,826	248	3,578	1,229	578
TEMPORARY RAMP E2							
STA. 904+20.10 TO STA. 908+50	3,631	0	2,723	12,435	-9,712	0	0
STAGE SUB-TOTAL	**16,372**	**0**	**11,510**	**31,212**	**-19,685**	**8,023**	**1,945**
STAGE 4B							
MORTON AVE							
STA. 42+17.80 TO STA. 42+99.50	97	0	73	1	72	0	35
STAGE SUB-TOTAL	**97**	**0**	**73**	**1**	**72**	**0**	**35**
STAGE 5							
I-74							
STA. 552+00.00 TO STA. 556+50.00	972	0	729	63	666	0	0
TEMPORARY I-74							
STA. 722+50.00 TO STA. 735+34.65	8,943	0	6,707	42,330	-35,623	0	0
TEMPORARY RAMP E2							
STA. 901+19.39 TO STA. 904+69.39	0	0	0	4,606	-4,606	0	0
MATERIAL AVAILABLE FROM STAGE 4B			72		72		
STAGE SUB-TOTAL	**9,916**	**0**	**7,508**	**47,000**	**-39,491**	**0**	**0**
STAGE 6							
I-74							
STA. 508+25.00 TO STA. 517+80.78	212	0	159	2,381	-2,222	0	0
STA. 552+00.00 TO STA. 556+50.00	1,730	0	1,298	21	1,277	0	0
TEMPORARY I-74							
STA. 700+00.00TO STA. 710+46.47	278	0	208	2,528	-2,320	0	0
STA. 725+00.00TO STA. 735+34.65	8,618	0	6,463	3,114	3,349	0	0
STAGE SUB-TOTAL	**10,838**	**0**	**8,128**	**8,045**	**83**	**0**	**0**
STAGE 7A							
I-74							
STA. 508+25.00 TO STA. 517+80.78	355	313	501	7,255	-6,754	2,061	616
STA. 552+00.00 TO STA. 556+50.00	3,536	0	2,652	8,590	-5,938	1,790	541
TEMPORARY I-74							
STA. 700+00.00 TO STA. 705+19.19	26	0	19	1,189	-1,170	0	0
STA. 729+34.19 TO STA. 735+34.65	5,106	0	3,829	1,411	2,418	0	0
MATERIAL AVAILABLE FROM STAGE 6			83		83		
STAGE SUB-TOTAL	**9,022**	**313**	**7,084**	**18,445**	**-11,361**	**3,852**	**1,157**
STAGE 7B							
I-155							
STA. 14+00 TO STA. 35+90.00	1,050	0	787	5,959	-5,172	698	0
RAMP E							
STA. 200+00.00 TO STA. 216+00.00	8,153	0	6,114	15,113	-8,999	2,510	978
STAGE SUB-TOTAL	**9,202**	**0**	**6,901**	**21,071**	**-14,170**	**3,208**	**978**
STAGE 8							
I-155							
13+33.08 TO STA. 35+90.00	1,180	553	1,299	9,573	-8,274	976	0
RAMP E INFIELD	8,831	0	6,623	5,702	921	9,088	0
STAGE SUB-TOTAL	**10,011**	**553**	**7,922**	**15,275**	**-7,353**	**10,064**	**0**

EARTHWORK SCHEDULE

(1) STAGE & LOCATION	(2) EARTH EXCAVATION (CU. YD.)	(3) UNSTABLE* MATERIAL (CU. YD.)	(4) EXCAVATION TO BE USED IN EMBANKMENT ADJUSTED FOR SHRINKAGE (25% FACTOR) (CU. YD.)	(5) EMBANKMENT (CU. YD.)	(6) EARTHWORK BALANCE WASTE (+) OR BORROW (-) (CU. YD.)	(7) TOPSOIL EXCAVATION (CU. YD.)	(8) TOPSOIL PLACEMENT (CU. YD.)
STAGE 9							
I-74							
STA. 517+80.78 TO STA.552+01.28	68,676	278	51,716	9,353	42,363	6,052	1,451
RAMP G INFIELD	72,823	0	54,617	12,918	41,699	23,586	0
RAMP H INFIELD	5,536	0	4,152	14,277	-10,125	14,112	0
STAGE SUB-TOTAL	**147,035**	**278**	**110,485**	**36,548**	**73,937**	**43,750**	**1,451**
STAGE 10							
I-74							
STA. 517+80.78 TO STA.552+00	43,812	0	32,859	3,014	29,845	488	0
STAGE SUB-TOTAL	**43,812**	**0**	**32,859**	**3,014**	**29,845**	**488**	**0**
STAGE 11							
I-74							
STA. 518+00.00 TO STA. 526+76	2,949	0	2,212	631	1,581	13	209
I-155							
13+14.02 TO STA. 35+65.74	2,303	1,634	2,953	8,639	-5,686	3,156	1,016
RAMP F							
STA. 314+00 TO STA. 334+00	5,037	0	3,777	64,281	-60,504	3,107	3,272
MATERIAL AVAILABLE FROM STAGES 9 & 10			103,782		103,782		
STAGE SUB-TOTAL	**10,289**	**1,634**	**112,724**	**73,551**	**39,173**	**6,276**	**4,497**
STAGE 12							
I-74							
STA. 517+00.00 TO STA. 552+00.00	34,443	0	25,832	1,939	23,893	397	2,052
I-155							
5+00.00 TO STA. 13+00.00	113	0	85	53,847	-53,762	2,929	250
16+00.00 TO STA. 35+90.00	1,897	497	1,795	4,806	-3,011	2,346	762
RAMP G							
STA. 19+00.00TO STA. 38+00.00	565	0	424	27,211	-26,787	3,836	596
RAMP H							
STA. 102+00.00 TO STA. 126+00.00	2,389	0	1,792	43,136	-41,344	10,035	2,393
RAMP F INFIELD	21,942	0	16,457	33,943	-17,486	16,116	0
MATERIAL AVAILABLE FROM STAGE 11			39,173		39,173		
STAGE SUB-TOTAL	**61,350**	**497**	**85,558**	**164,883**	**-79,325**	**35,660**	**6,052**
STAGE 13							
I-74							
STA. 577+75.00 TO STA. 612+32.38	6,816	195	5,258	19,635	-14,377	3,024	1,056
MORTON AVE							
32+00.00 TO STA. 35+00.00	170	0	128	745	-617	206	18
MORTON RAMP D							
STA. 1101+00.00 TO STA. 1110+00.00	32	5,833	4,399	15,477	-11,078	1,492	0
MORTON RAMP D INFIELD	33,509	0	25,132	8,886	16,246	13,076	0
STAGE SUB-TOTAL	**40,527**	**6,028**	**34,917**	**44,743**	**-9,826**	**17,799**	**1,074**
STAGE 13B							
I-74							
STA. 606+51.77 TO STA. 619+067.41	693	0	520	457	63	430	99
MORTON AVE							
STA. 26+94 TO STA. 31+63.99	1,138	0	853	320	533	426	107
STA. 38+57.72TO STA.42+17.80	416	0	312	2	310	0	0
STAGE SUB-TOTAL	**2,247**	**0**	**1,685**	**779**	**906**	**856**	**207**
STAGE 14							
I-74							
STA. 577+78.93 TO STA. 609.62.83	3,619	72	2,768	1,333	1,435	658	158
MORTON AVE							
37+99.10 TO STA. 42+48.30	242	0	182	286	-104	0	0
STAGE SUB-TOTAL	**3,861**	**72**	**2,950**	**1,620**	**1,330**	**658**	**158**
STAGE 14B							
MORTON AVE							
STA. 27+00 TO STA. 34+50	266	0	200	652	-452	0	0
STA. 42+50 TO STA. 49+30.67	206	0	155	421	-266	0	0
MATERIAL AVAILABLE FROM STAGES 13B & 14			2,236		2,236		
STAGE SUB-TOTAL	**472**	**0**	**2,591**	**1,073**	**1,518**	**0**	**0**
TOTAL	**447,448**	**20,923**			**-302,142**	**196,909**	**28,663**

*SEE NOTE 1 FOR TOTAL EARTH EXCAVATION

SEE NOTE 2

NOTES:

1. EXCAVATION FOR UNSTABLE MATERIAL WILL BE PAID FOR AS EARTH EXCAVATION.

TOTAL QUANTITY FOR EARTH EXCAVATION = 468,371 CU YD

2. TOPSOIL EXCAVATION AND PLACEMENT:

TOPSOIL EXCAVATION YIELDED 196,909 CU YD OF TOPSOIL THAT IS TO BE EXCAVATED BASED ON THE RECOMMENDED THICKNESS IN THE ROADWAY GEOTECHNICAL REPORT.

THE REQUIRED VOLUME OF TOPSOIL PLACEMENT IS 28,663 CU YD AS SHOWN ON THE CROSS SECTIONS.
THE EXCESS TOPSOIL IN THE AMOUNT OF 168,246 CU YD SHALL BE PLACED AT THE BORROW SITE.

Resurfacing Table							
Location S.N. 090-0091 Pinecrest Drive	Length	Width	Area	HMA Surface Removal 1 1/4"	Temporary Ramp	Polymerized Bituminous Materials (Prime Coat)	HMA Surf Cse Mix E, N50
	Feet	Feet	Sq Yd	Sq Yd	Sq Yd	Ton	Ton
NBL							
59+11 TO 61+07	196	35	762.22	762	39	0.3	53.4
SBL							
59+11 TO 61+07	196	23	500.89	501	26	0.2	35.1
TOTAL				1263	65	0.5	88.5

Urethane Pavement Marking				
Location	4" White	4" Yellow	8" White	Letters & Symbols
	Foot	Foot	Foot	Sq Ft
STA. 59+11 TO 61+07	392	392	196	20
STA. 65+80 TO 65+86		30		
STA. 55+15 TO 55+21		18		
TOTAL	392	440	196	20

Median Removal	
Location	Sq Ft
STA. 65+52 TO 65+86	447
STA. 55+39 TO 55+15	234
TOTAL	681

Concrete Median Type SB 6.12	
Location	Sq Ft
STA. 65+80 TO 65+86	112
STA. 55+15 TO 55+21	79
TOTAL	191

PCC Base Course 9"	
Location	Sq Yd
STA. 65+80 TO 65+86	50
STA. 55+15 TO 55+21	26
TOTAL	76

LOCATION			PAVEMENT REMOVAL	DRIVEWAY PAVEMENT REMOVAL	COMBINATION CURB AND GUTTER REMOVAL	MEDIAN REMOVAL	PAVED DITCH REMOVAL	PAVED SHOULDER REMOVAL	CONCRETE HEADWALL REMOVAL	PIPE CULVERT REMOVAL	STORM SEWER REMOVAL 12"	STORM SEWER REMOVAL 15"	STORM SEWER REMOVAL 18"	STORM SEWER REMOVAL 24"
ROAD	STATION FROM	STATION TO	SQ YD	SQ YD	FOOT	SQ FT	FOOT	SQ YD	EACH	FOOT	FOOT	FOOT	FOOT	FOOT
I-474	-	456+00.00	0	0	0	0	0	0	0	0	0	0	0	0
I-74	456+00.00	471+00.00	2573	0	0	0	54	3606	0	0	0	0	0	95
I-74	471+00.00	486+00.00	11103	0	0	0	0	7289	0	0	0	0	0	95
I-74	486+00.00	501+00.00	11986	0	0	0	0	6905	0	0	0	0	0	171
I-74	501+00.00	516+00.00	12761	0	0	0	0	6590	2	175	0	0	0	0
I-74	516+00.00	531+00.00	15544	0	0	0	0	9563	3	612	0	0	0	173
RAMP G/H	118+50.00	101+47.00	4968	0	0	0	0	3101	5	328	0	0	0	229
I-74	531+00.00	546+00.00	14973	0	0	0	100	9537	5	0	172	156	0	168
I-74	546+00.00	561+00.00	12700	0	226	3862	0	5353	0	0	0	174	60	0
I-74	561+00.00	576+00.00	8824	108	0	826	0	4888	6	225	0	402	0	0
I-74	576+00.00	591+00.00	12056	362	221	0	955	6987	4	384	0	179	0	20
I-74	591+00.00	606+00.00	7668	0	731	5993	314	4319	0	0	0	0	0	72
I-74	606+00.00	621+00.00	2692	0	0	0	0	2174	0	0	0	0	0	0
I-74	621+00.00	636+00.00	0	0	0	0	0	0	0	0	0	0	0	0
I-74	636+00.00	640+00.00	0	0	0	0	0	0	0	0	0	0	0	0
I-155	00+00.00	09+00.00	10446	0	0	0	0	6146	4	838	0	28	0	94
I-155	09+00.00	23+00.00	7403	0	0	0	0	4633	0	241	0	0	0	0
I-155	23+00.00	37+50.00	0	0	0	0	0	1070	0	0	0	0	0	0
I-155	37+50.00	51+00.00	0	0	0	0	0	0	0	0	0	0	0	0
I-155	51+00.00	66+00.00	0	0	0	0	0	0	0	0	0	0	0	0
Morton Ave.	16+00.00	28+25.00	1178	0	1183	2060	0	58	0	0	47	0	0	0
Morton Ave.	28+25.00	36+50.00	11326	0	2170	10428	0	3872	0	195	292	0	0	0
Morton Ave.	36+50.00	44+75.00	5847	0	1874	9730	24	1658	0	0	0	0	0	0
Morton Ave.	44+75.00	58+00.00	3397	0	1046	953	0	253	0	144	0	188	0	0
		TOTAL	157,445	470	7,451	33,852	1,447	88,002	29	3,142	511	1,127	60	1,117

			STORM SEWER REMOVAL 30"	STORM SEWER REMOVAL 36"	STORM SEWER REMOVAL 48"	REMOVING MANHOLES	REMOVING CATCH BASINS	REMOVING INLETS	GUARDRAIL REMOVAL	CABLE ROAD GUARD REMOVAL	REMOVE EXISTING RIPRAP
ROAD	STATION FROM	STATION TO	FOOT	FOOT	FOOT	EACH	EACH	EACH	FOOT	FOOT	SQ YD
I-474	-	456+00.00	0	0	0	0	0	0	0	0	0
I-74	456+00.00	471+00.00	0	0	0	0	0	0	516	1098	0
I-74	471+00.00	486+00.00	0	0	0	0	0	1	885	1417	0
I-74	486+00.00	501+00.00	0	0	0	0	0	1	1598	1097	0
I-74	501+00.00	516+00.00	0	0	0	0	1	0	1368	1153	0
I-74	516+00.00	531+00.00	0	0	0	0	0	2	819	1498	0
RAMP G/H	118+50.00	101+47.00	0	0	0	0	0	0	0	0	218
I-74	531+00.00	546+00.00	101	0	50	0	1	6	5481	797	0
I-74	546+00.00	561+00.00	0	0	0	0	0	3	4852	584	8
I-74	561+00.00	576+00.00	0	0	0	0	0	5	3700	802	0
I-74	576+00.00	591+00.00	0	168	150	2	1	3	223	1393	40
I-74	591+00.00	606+00.00	0	22	0	0	1	0	63	0	0
I-74	606+00.00	621+00.00	0	8	0	0	0	1	0	0	0
I-74	621+00.00	636+00.00	0	0	0	0	0	0	0	0	0
I-74	636+00.00	640+00.00	0	0	0	0	0	0	0	0	0
I-155	00+00.00	09+00.00	0	0	0	0	0	3	854	0	0
I-155	09+00.00	23+00.00	0	0	0	0	0	0	0	0	182
I-155	23+00.00	37+50.00	0	0	0	0	0	0	0	0	717
I-155	37+50.00	51+00.00	0	0	0	0	1	0	0	0	0
I-155	51+00.00	66+00.00	0	0	0	0	1	0	0	0	0
Morton Ave.	16+00.00	28+25.00	0	0	0	0	1	0	0	0	0
Morton Ave.	28+25.00	36+50.00	0	91	0	2	2	1	354	0	43
Morton Ave.	36+50.00	44+75.00	0	8	0	0	0	0	63	0	0
Morton Ave.	44+75.00	58+00.00	0	0	0	1	0	4	0	0	0
		TOTAL	101	297	200	5	9	30	20,776	9,839	1,208

NOTE

1. SEE SIGN SCHEDULE SHEETS FOR EACH STAGE FOR REMOVAL SCHEDULES ASSOCIATED WITH SIGNS AND SIGN STRUCTURES.
2. SEE SCHEDULE OF QUANTITIES FOR EACH STAGE FOR PAVEMENT MARKING REMOVAL SCHEDULE

LOCATION			REMOVE INLET BOX	FENCE REMOVAL	FILLING EXISTING CULVERTS	IMPACT ATTENUATOR REMOVAL	HOT-MIX ASPHALT SURFACE REMOVAL BUTT-JOINT	PAVEMENT MARKING REMOVAL	DELINEATOR REMOVAL
ROAD	STATION FROM	STATION TO	EACH	FOOT	EACH	EACH	SQ YD	SQ FT	EACH
I-474	-	456+00.00	0	0	0	0	0	2012	0
I-74	456+00.00	471+00.00	1	0	0	2	190	2008	0
I-74	471+00.00	486+00.00	0	1463	0	0	308	1452	0
I-74	486+00.00	501+00.00	1	756	0	2	0	871	0
I-74	501+00.00	516+00.00	0	2520	0	0	0	1113	0
I-74	516+00.00	531+00.00	0	2014	0	0	0	2521	15
RAMP G/H	118+50.00	101+47.00	0	1672	0	0	0	0	34
I-74	531+00.00	546+00.00	0	617	0	0	0	2116	0
I-74	546+00.00	561+00.00	0	1613	0	0	0	1835	0
I-74	561+00.00	576+00.00	0	3081	0	0	0	1701	2
I-74	576+00.00	591+00.00	0	2284	0	0	0	3417	39
I-74	591+00.00	606+00.00	0	0	0	2	0	2962	28
I-74	606+00.00	621+00.00	0	0	0	0	553	1914	13
I-74	621+00.00	636+00.00	0	0	0	0	0	383	0
I-74	636+00.00	640+00.00	0	0	0	0	0	54	0
I-155	00+00.00	09+00.00	2	2307	0	0	0	2874	0
I-155	09+00.00	23+00.00	1	473	0	0	544	1349	0
I-155	23+00.00	37+50.00	0	0	0	0	0	2616	0
I-155	37+50.00	51+00.00	0	0	0	0	0	882	0
I-155	51+00.00	66+00.00	0	0	0	0	0	0	0
Morton Ave.	16+00.00	28+25.00	0	0	0	0	0	881	0
Morton Ave.	28+25.00	36+50.00	0	0	1	0	0	2452	17
Morton Ave.	36+50.00	44+75.00	0	45	0	0	0	1684	11
Morton Ave.	44+75.00	58+00.00	0	372	0	0	0	1428	0
		TOTAL	5	19,217	1	6	1,595	38,525	159

NOTE

1. SEE SIGN SCHEDULE SHEETS FOR EACH STAGE FOR REMOVAL SCHEDULES ASSOCIATED WITH SIGNS AND SIGN STRUCTURES.

2. SEE SCHEDULE OF QUANTITIES FOR EACH STAGE FOR PAVEMENT MARKING REMOVAL SCHEDULE

LOCATION			AGGREGATE SUBGRADE IMPROVEMENT 8"	AGGREGATE SUBGRADE IMPROVEMENT 12"	STABILIZED SUBBASE HOT-MIX ASPHALT, 4"	AGGREGATE SHOULDERS, TYPE B 6"	PORTLAND CEMENT CONCRETE SHOULDERS 11"	PIPE UNDERDRAINS 4"	TEMPORARY PAVEMENT REMOVAL	AGGREGATE SHOULDER REMOVAL	WHITEWASHING FOR CONCRETE PAVEMENT	TEMPORARY PAVEMENT
ROAD	STATION FROM	STATION TO	SQ YD	SQ YD	SQ YD	SQ YD	SQ YD	FOOT	SQ YD	CU YD	SQ YD	SQ YD
I-474	-	456+00.00	0	0	0	0	0	0	0	0	0	0
I-74	456+00.00	471+00.00	0	332	332	104	316	285	0	0	332	717
I-74	471+00.00	486+00.00	0	0	0	141	0	0	0	0	0	1413
I-74	486+00.00	501+00.00	0	0	0	0	0	0	0	0	0	0
I-74	501+00.00	516+00.00	0	0	0	0	0	0	0	0	0	0
I-74	516+00.00	531+00.00	0	0	0	204	0	0	0	0	0	4322
RAMP G/H	118+50.00	101+47.00	0	0	0	0	0	0	0	0	0	0
I-74	531+00.00	546+00.00	0	0	0	171	0	0	0	0	0	1692
I-74	546+00.00	561+00.00	0	0	0	15	0	0	0	0	0	326
I-74	561+00.00	576+00.00	0	0	0	0	0	0	0	0	0	0
I-74	576+00.00	591+00.00	0	221	221	87	210	192	0	0	221	3041
I-74	591+00.00	606+00.00	0	84	84	52	79	89	0	0	84	263
I-74	606+00.00	621+00.00	0	155	155	167	147	133	0	0	155	2300
I-74	621+00.00	636+00.00	0	292	292	28	278	250	0	0	292	0
I-74	636+00.00	640+00.00	0	0	0	0	0	0	0	0	0	0
I-155	00+00.00	09+00.00	0	0	0	73	0	0	0	0	0	1587
I-155	09+00.00	23+00.00	0	0	0	0	0	0	0	0	0	0
I-155	23+00.00	37+50.00	0	299	299	1	299	0	0	0	299	0
I-155	37+50.00	51+00.00	0	0	0	0	0	0	0	0	0	0
I-155	51+00.00	66+00.00	0	0	0	0	0	0	0	0	0	0
Morton Ave.	16+00.00	28+25.00	0	0	0	0	0	0	0	0	0	0
Morton Ave.	28+25.00	36+50.00	0	0	0	0	0	0	0	0	0	34
Morton Ave.	36+50.00	44+75.00	0	330	330	80	293	0	0	0	330	353
Morton Ave.	44+75.00	58+00.00	0	0	0	0	0	0	0	0	0	0
		TOTALS	0	1713	1713	1123	1622	949	0	0	1713	16048

	GLARE SCREEN (NEW LOCATION)	GLARE SCREEN TO REMAIN	GLARE SCREEN ON-SITE	TEMPORARY CONCRETE BARRIER (NEW LOCATION)	TEMPORARY CONCRETE BARRIER TO REMAIN	TEMPORARY CONCRETE BARRIER ON-SITE
	FOOT	FOOT	FOOT	FOOT	FOOT	FOOT
	0	0	0	0.0	0.0	0.0
	0	0	GLARE SCREEN FROM PREVIOUS STAGE	0.0	0.0	TEMPORARY CONCRETE BARRIER FROM PREVIOUS STAGE
	0	0		0.0	0.0	
	0	0		0.0	0.0	
	0	0		0.0	0.0	
	0	0		0.0	0.0	
	0	0		0.0	0.0	
	0	0		0.0	0.0	
	0	0	FOOT	0.0	0.0	FOOT
	0	0	0	0.0	0.0	0.0
	0	0	RELOCATE MODULAR GLARE SCREEN SYSTEM	0.0	0.0	RELOCATE TEMPORARY CONCRETE BARRIER
	0	0		0.0	0.0	
	0	0		0.0	0.0	
	0	0		0.0	0.0	
	0	0		0.0	0.0	
	0	0	FOOT	0.0	0.0	FOOT
	0	0	0	0.0	0.0	0.0
	0	0		0.0	0.0	
	0	0	MODULAR GLARE SCREEN SYSTEM	0.0	0.0	TEMPORARY CONCRETE BARRIER
	0	0		0.0	0.0	
	0	0		0.0	0.0	
	0	0		0.0	0.0	
	0	0	FOOT			FOOT
TOTALS	0	0	0	0.0	0.0	0.0

LOCATION			PAVEMENT MARKING TAPE, TY III LETTERS & SYMBOLS	PAVEMENT MARKING TAPE, TYPE III 4"	PAVEMENT MARKING TAPE, TYPE III 8"	PAVEMENT MARKING TAPE, TYPE III 12"	PAVEMENT MARKING TAPE, TYPE III 24"	WORK ZONE PAVEMENT MARKING REMOVAL	POLYUREA PAVEMENT MARKING TYPE II LINE 4"	POLYUREA PAVEMENT MARKING TYPE II LINE 8"	POLYUREA PAVEMENT MARKING TYPE II LINE 12"
ROAD	STATION FROM	STATION TO	SQ FT	FOOT	FOOT	FOOT	FOOT	SQ FT	FOOT	FOOT	FOOT
I-474	-	456+00.00	0	0	0	0	0	0	0	0	0
I-74	456+00.00	471+00.00	0	0	0	0	0	0	0	0	0
I-74	471+00.00	486+00.00	0	0	0	0	0	0	0	0	0
I-74	486+00.00	501+00.00	0	0	0	0	0	0	0	0	0
I-74	501+00.00	516+00.00	0	0	0	0	0	0	0	0	0
I-74	516+00.00	531+00.00	0	0	0	0	0	0	0	0	0
RAMP G/H	118+50.00	101+47.00	0	0	0	0	0	0	0	0	0
I-74	531+00.00	546+00.00	0	939	0	0	0	0	0	0	0
I-74	546+00.00	561+00.00	0	600	0	0	0	0	0	0	0
I-74	561+00.00	576+00.00	0	2000	0	0	0	0	0	0	0
I-74	576+00.00	591+00.00	0	1562	0	0	0	0	0	0	0
I-74	591+00.00	606+00.00	0	2464	0	0	0	0	0	0	0
I-74	606+00.00	621+00.00	0	2300	0	0	0	0	0	0	0
I-74	621+00.00	636+00.00	0	0	0	0	0	0	0	0	0
I-74	636+00.00	640+00.00	0	0	0	0	0	0	0	0	0
I-155	00+00.00	09+00.00	0	0	0	0	0	0	0	0	0
I-155	09+00.00	23+00.00	0	0	0	0	0	0	0	0	0
I-155	23+00.00	37+50.00	0	76	0	0	0	0	0	0	0
I-155	37+50.00	51+00.00	0	1224	0	0	0	0	0	0	0
I-155	51+00.00	66+00.00	0	0	0	0	0	0	0	0	0
Morton Ave.	16+00.00	28+25.00	0	158	0	0	0	0	0	0	0
Morton Ave.	28+25.00	36+50.00	15	1144	0	0	0	0	0	0	0
Morton Ave.	36+50.00	44+75.00	0	0	0	0	0	0	0	0	0
Morton Ave.	44+75.00	58+00.00	0	0	0	0	0	0	0	0	0
		TOTALS	15	12467	0	0	0	0	0	0	0

	SHORT TERM PAVEMENT MARKING	CHANGEABLE MESSAGE SIGN
	FOOT	CAL MO
TOTAL PRE STAGE A	623	3.25

ATTENUATOR LOCATION SCHEDULE				IMPACT ATTENUATORS WIDE NEW OR RELOCATED	IMPACT ATTENUATORS WIDE TO REMAIN	IMPACT ATTENUATORS NARROW NEW OR RELOCATED	IMPACT ATTENUATORS NARROW TO REMAIN
ROAD	STATION	OFFSET	TYPE	EACH	EACH	EACH	EACH
			(NO ATTENUATORS THIS STAGE)				

	TEST LEVEL 2 ATTENUATORS NEW OR RELOCATED	TEST LEVEL 2 ATTENUATORS TO REMAIN	ATTENUATORS FROM PREVIOUS STAGE	IMPACT ATTENUATORS TEMPORARY (NON-REDRCTVE), TEST LVL 2	IMPACT ATTENUATORS, TEMPORARY (FULLY REDRCTVE, NARROW TEST LVL 2	IMPACT ATTENUATORS, RELOCATE (FULLY REDRCTVE, TEST LVL 2	IMPACT ATTENUATORS, RELOCATE (NON-REDRCTVE), TEST LVL 2
WIDE	0	0	0	0	-	-	0
NARROW	0	0	0	-	0	0	-

	TEST LEVEL 3 ATTENUATORS NEW OR RELOCATED	TEST LEVEL 3 ATTENUATORS TO REMAIN	ATTENUATORS FROM PREVIOUS STAGE	IMPACT ATTENUATORS TEMPORARY (NON-REDRCTVE), TEST LVL 3	IMPACT ATTENUATORS, TEMPORARY (FULLY REDRCTVE, NARROW TEST LVL 3	IMPACT ATTENUATORS, RELOCATE (FULLY REDRCTVE, TEST LVL 3	IMPACT ATTENUATORS, RELOCATE (NON-REDRCTVE), TEST LVL 3
WIDE	0	0	0	0	-	-	0
NARROW	0	0	0	-	0	0	-

LOCATION			AGGREGATE SUBGRADE IMPROVEMENT 8"	AGGREGATE SUBGRADE IMPROVEMENT 12"	STABILIZED SUBBASE HOT-MIX ASPHALT, 4"	AGGREGATE SHOULDERS, TYPE B 6"	PORTLAND CEMENT CONCRETE SHOULDERS 11"	PIPE UNDERDRAINS 4"	TEMPORARY PAVEMENT REMOVAL	AGGREGATE SHOULDER REMOVAL	WHITEWASHING FOR CONCRETE PAVEMENT	TEMPORARY PAVEMENT
ROAD	STATION FROM	STATION TO	SQ YD	SQ YD	SQ YD	SQ YD	SQ YD	FOOT	SQ YD	CU YD	SQ YD	SQ YD
I-474	-	456+00.00	0	90	90	8	86	78	0	0	90	0
I-74	456+00.00	471+00.00	0	1756	1756	167	1672	1505	0	0	1756	0
I-74	471+00.00	486+00.00	0	233	233	166	222	200	0	0	233	1569
I-74	486+00.00	501+00.00	0	0	0	167	0	0	0	0	0	1699
I-74	501+00.00	516+00.00	0	0	0	177	0	0	0	0	0	1841
I-74	516+00.00	531+00.00	0	0	0	69	0	0	0	0	0	686
RAMP G/H	118+50.00	101+47.00	0	0	0	0	0	0	0	0	0	0
I-74	531+00.00	546+00.00	0	0	0	93	0	0	0	0	0	809
I-74	546+00.00	561+00.00	0	0	0	218	0	0	0	0	0	2025
I-74	561+00.00	576+00.00	0	0	0	264	0	0	0	0	0	2298
I-74	576+00.00	591+00.00	0	0	0	337	0	0	0	0	0	2774
I-74	591+00.00	606+00.00	0	1154	1154	239	1116	634	0	0	1154	2498
I-74	606+00.00	621+00.00	0	0	0	12	0	0	0	0	0	497
I-74	621+00.00	636+00.00	0	0	0	0	0	0	0	0	0	0
I-74	636+00.00	640+00.00	0	0	0	0	0	0	0	0	0	0
I-155	00+00.00	09+00.00	0	0	0	169	0	0	0	0	0	1587
I-155	09+00.00	23+00.00	0	304	304	318	288	283	0	0	304	2922
I-155	23+00.00	37+50.00	0	689	689	65	656	591	0	0	689	0
I-155	37+50.00	51+00.00	0	0	0	0	0	0	0	0	0	0
I-155	51+00.00	66+00.00	0	0	0	0	0	0	0	0	0	0
Morton Ave.	16+00.00	28+25.00	0	0	0	0	0	0	0	0	0	0
Morton Ave.	28+25.00	36+50.00	0	0	0	0	0	0	0	0	0	404
Morton Ave.	36+50.00	44+75.00	0	0	0	29	0	0	0	0	0	580
Morton Ave.	44+75.00	58+00.00	0	0	0	0	0	0	0	0	0	0
		TOTALS	0	4226	4226	2498	4040	3291	0	0	4226	22190

	GLARE SCREEN (NEW LOCATION)	GLARE SCREEN TO REMAIN	GLARE SCREEN ON-SITE	TEMPORARY CONCRETE BARRIER (NEW LOCATION)	TEMPORARY CONCRETE BARRIER TO REMAIN	TEMPORARY CONCRETE BARRIER ON-SITE
	FOOT	FOOT	FOOT	FOOT	FOOT	FOOT
	0	0	0	0.0	0	1650.0
	0	0	GLARE SCREEN FROM PREVIOUS STAGE FOOT	0.0	0	TEMPORARY CONCRETE BARRIER FROM PREVIOUS STAGE FOOT
	0	0		0.0	0	
	0	0		0.0	0	
	0	0		0.0	0	
	0	0		0.0	0	
	0	0		0.0	0	
	0	0		0.0	0	
	0	0		0.0	0	
	0	0		0.0	0	
	0	0	0	0.0	0	0.0
	0	0	RELOCATE MODULAR GLARE SCREEN SYSTEM FOOT	0.0	0	RELOCATE TEMPORARY CONCRETE BARRIER FOOT
	0	0		0.0	0	
	0	0		0.0	0	
	0	0		0.0	0	
	0	0		0.0	0	
	0	0		0.0	0	
	0	0		0.0	0	
	0	0		0.0	0	
	0	0	0	0.0	0	0.0
	0	0	MODULAR GLARE SCREEN SYSTEM FOOT	0.0	0	TEMPORARY CONCRETE BARRIER FOOT
	0	0		650.0	0	
	0	0		1000.0	0	
	0	0		0.0	0	
TOTALS	0	0	0	1650.0	0	1650.0

LOCATION			PAVEMENT MARKING TAPE, TY III LETTERS & SYMBOLS	PAVEMENT MARKING TAPE, TYPE III 4"	PAVEMENT MARKING TAPE, TYPE III 8"	PAVEMENT MARKING TAPE, TYPE III 12"	PAVEMENT MARKING TAPE, TYPE III 24"	WORK ZONE PAVEMENT MARKING REMOVAL	POLYUREA PAVEMENT MARKING TYPE II LINE 4"	POLYUREA PAVEMENT MARKING TYPE II LINE 8"	POLYUREA PAVEMENT MARKING TYPE II LINE 12"
ROAD	STATION FROM	STATION TO	SQ FT	FOOT	FOOT	FOOT	FOOT	SQ FT	FOOT	FOOT	FOOT
I-474	-	456+00.00	0	1300	0	0	0	0	0	0	0
I-74	456+00.00	471+00.00	0	0	0	0	0	0	0	0	0
I-74	471+00.00	486+00.00	0	0	0	0	0	0	0	0	0
I-74	486+00.00	501+00.00	0	0	0	0	0	0	0	0	0
I-74	501+00.00	516+00.00	0	0	0	0	0	0	0	0	0
I-74	516+00.00	531+00.00	0	0	0	0	0	0	0	0	0
RAMP G/H	118+50.00	101+47.00	0	0	0	0	0	0	0	0	0
I-74	531+00.00	546+00.00	0	1641	0	0	0	313	0	0	0
I-74	546+00.00	561+00.00	0	1500	0	0	0	200	0	0	0
I-74	561+00.00	576+00.00	0	200	0	0	0	666	0	0	0
I-74	576+00.00	591+00.00	0	5249	0	0	0	520	0	0	0
I-74	591+00.00	606+00.00	0	2700	0	0	0	933	0	0	0
I-74	606+00.00	621+00.00	0	865	0	0	0	819	0	0	0
I-74	621+00.00	636+00.00	0	1500	0	0	0	0	0	0	0
I-74	636+00.00	640+00.00	0	0	0	0	0	0	0	0	0
I-155	00+00.00	09+00.00	0	0	0	0	0	0	0	0	0
I-155	09+00.00	23+00.00	0	104	0	0	0	0	0	0	0
I-155	23+00.00	37+50.00	0	1488	0	0	0	0	0	0	0
I-155	37+50.00	51+00.00	0	0	0	0	0	0	0	0	0
I-155	51+00.00	66+00.00	0	0	0	0	0	0	0	0	0
Morton Ave.	16+00.00	28+25.00	0	1768	0	32	0	52	0	0	0
Morton Ave.	28+25.00	36+50.00	38	2749	214	0	76	377	0	0	0
Morton Ave.	36+50.00	44+75.00	0	3711	77	0	67	0	0	0	0
Morton Ave.	44+75.00	58+00.00	0	904	0	0	0	0	0	0	0
		TOTALS	38	25679	292	32	143	3880	0	0	0

	SHORT TERM PAVEMENT MARKING	CHANGEABLE MESSAGE SIGN
	FOOT	CAL MO
TOTAL PRE STAGE B	1,307	3.25

ATTENUATOR LOCATION SCHEDULE				IMPACT ATTENUATORS WIDE NEW OR RELOCATED	IMPACT ATTENUATORS WIDE TO REMAIN	IMPACT ATTENUATORS NARROW NEW OR RELOCATED	IMPACT ATTENUATORS NARROW TO REMAIN
ROAD	STATION	OFFSET	TYPE				
				EACH	EACH	EACH	EACH
MORTON	41+34.50	-8.37	NARROW		0	1	0
MORTON	31+91.34	13.5	NARROW		0	1	0
MORTON	41+86.29	13.44	NARROW		0	1	0

	TEST LEVEL 2 ATTENUATORS NEW OR RELOCATED	TEST LEVEL 2 ATTENUATORS TO REMAIN	ATTENUATORS FROM PREVIOUS STAGE	IMPACT ATTENUATORS TEMPORARY (NON-REDRCTVE), TEST LVL 2	IMPACT ATTENUATORS, TEMPORARY (FULLY REDRCTVE, NARROW TEST LVL 2	IMPACT ATTENUATORS, RELOCATE (FULLY REDRCTVE, TEST LVL 2	IMPACT ATTENUATORS, RELOCATE (NON-REDRCTVE), TEST LVL 2
WIDE	0	0	0	0	-	-	0
NARROW	3	0	0	-	3	0	-

	TEST LEVEL 3 ATTENUATORS NEW OR RELOCATED	TEST LEVEL 3 ATTENUATORS TO REMAIN	ATTENUATORS FROM PREVIOUS STAGE	IMPACT ATTENUATORS TEMPORARY (NON-REDRCTVE), TEST LVL 3	IMPACT ATTENUATORS, TEMPORARY (FULLY REDRCTVE, NARROW TEST LVL 3	IMPACT ATTENUATORS, RELOCATE (FULLY REDRCTVE, TEST LVL 3	IMPACT ATTENUATORS, RELOCATE (NON-REDRCTVE), TEST LVL 3
WIDE	0	0	0	0	-	-	0
NARROW	0	0	0	-	0	0	-

LOCATION			AGGREGATE SUBGRADE IMPROVEMENT 8"	AGGREGATE SUBGRADE IMPROVEMENT 12"	STABILIZED SUBBASE HOT-MIX ASPHALT, 4"	AGGREGATE SHOULDERS, TYPE B 6"	PORTLAND CEMENT CONCRETE SHOULDERS 11"	PIPE UNDERDRAINS 4"	TEMPORARY PAVEMENT REMOVAL	AGGREGATE SHOULDER REMOVAL	WHITEWASHING FOR CONCRETE PAVEMENT	TEMPORARY PAVEMENT
ROAD	STATION FROM	STATION TO	SQ YD	SQ YD	SQ YD	SQ YD	SQ YD	FOOT	SQ YD	CU YD	SQ YD	SQ YD
I-474	-	456+00.00										
I-74	456+00.00	471+00.00										
I-74	471+00.00	486+00.00										
I-74	486+00.00	501+00.00										
I-74	501+00.00	516+00.00										
I-74	516+00.00	531+00.00										
RAMP G/H	118+50.00	101+47.00										
I-74	531+00.00	546+00.00										
I-74	546+00.00	561+00.00										
I-74	561+00.00	576+00.00										
I-74	576+00.00	591+00.00										
I-74	591+00.00	606+00.00										
I-74	606+00.00	621+00.00										
I-74	621+00.00	636+00.00										
I-74	636+00.00	640+00.00										
I-155	00+00.00	09+00.00										
I-155	09+00.00	23+00.00										
I-155	23+00.00	37+50.00										
I-155	37+50.00	51+00.00										
I-155	51+00.00	66+00.00										
Morton Ave.	16+00.00	28+25.00	0	0	0	0	0	0	0	0	0	476
Morton Ave.	28+25.00	36+50.00	0	0	0	0	0	0	0	0	0	794
Morton Ave.	36+50.00	44+75.00	0	0	0	0	0	0	0	0	0	667
Morton Ave.	44+75.00	58+00.00	0	0	0	0	0	0	0	0	0	154
		TOTALS	0	0	0	0	0	0	0	0	0	2091

	GLARE SCREEN (NEW LOCATION)	GLARE SCREEN TO REMAIN	GLARE SCREEN ON-SITE (MORTON)	TEMPORARY CONCRETE BARRIER (NEW LOCATION)	TEMPORARY CONCRETE BARRIER TO REMAIN	TEMPORARY CONCRETE BARRIER ON-SITE (MORTON)
	FOOT	FOOT	FOOT	FOOT	FOOT	FOOT
			0			775.0
			GLARE SCREEN FROM PREVIOUS STAGE (MORTON) FOOT			TEMPORARY CONCRETE BARRIER FROM PREVIOUS STAGE (MORTON) FOOT
			0			1650.0
			RELOCATE MODULAR GLARE SCREEN SYSTEM FOOT			RELOCATE TEMPORARY CONCRETE BARRIER FOOT
			0			775.0
TOTALS	0	0	MODULAR GLARE SCREEN SYSTEM FOOT 0	462.5 312.5 0.0 0.0 775.0	0.0 0.0 0.0 0.0 0.0	TEMPORARY CONCRETE BARRIER FOOT 0.0

LOCATION			PAVEMENT MARKING TAPE, TY III LETTERS & SYMBOLS	PAVEMENT MARKING TAPE, TYPE III 4"	PAVEMENT MARKING TAPE, TYPE III 8"	PAVEMENT MARKING TAPE, TYPE III 12"	PAVEMENT MARKING TAPE, TYPE III 24"	WORK ZONE PAVEMENT MARKING REMOVAL	POLYUREA PAVEMENT MARKING TYPE II LINE 4"	POLYUREA PAVEMENT MARKING TYPE II LINE 8"	POLYUREA PAVEMENT MARKING TYPE II LINE 12"
ROAD	STATION FROM	STATION TO	SQ FT	FOOT	FOOT	FOOT	FOOT	SQ FT	FOOT	FOOT	FOOT
I-474	-	456+00.00									
I-74	456+00.00	471+00.00									
I-74	471+00.00	486+00.00									
I-74	486+00.00	501+00.00									
I-74	501+00.00	516+00.00									
I-74	516+00.00	531+00.00									
RAMP G/H	118+50.00	101+47.00									
I-74	531+00.00	546+00.00									
I-74	546+00.00	561+00.00									
I-74	561+00.00	576+00.00									
I-74	576+00.00	591+00.00									
I-74	591+00.00	606+00.00									
I-74	606+00.00	621+00.00									
I-74	621+00.00	636+00.00									
I-74	636+00.00	640+00.00									
I-155	00+00.00	09+00.00									
I-155	09+00.00	23+00.00									
I-155	23+00.00	37+50.00									
I-155	37+50.00	51+00.00									
I-155	51+00.00	66+00.00									
Morton Ave.	16+00.00	28+25.00	0	1070	0	0	0	0	0	0	0
Morton Ave.	28+25.00	36+50.00	18	1617	0	0	30	370	0	0	0
Morton Ave.	36+50.00	44+75.00	16	1688	260	0	21	707	0	0	0
Morton Ave.	44+75.00	58+00.00	0	677	0	0	0	261	0	0	0
		TOTALS	34	5052	260	0	51	1338	0	0	0

	SHORT TERM PAVEMENT MARKING	CHANGEABLE MESSAGE SIGN
	FOOT	CAL MO
TOTAL PRE STAGE C	268	0.75

NOTE

MORTON PRE STAGE SUB STAGE C INDEPENDENT FROM I-74/I-155 PRE STAGE SUB STAGES A AND B

ATTENUATOR LOCATION SCHEDULE				IMPACT ATTENUATORS WIDE NEW OR RELOCATED	IMPACT ATTENUATORS WIDE TO REMAIN	IMPACT ATTENUATORS NARROW NEW OR RELOCATED	IMPACT ATTENUATORS NARROW TO REMAIN
ROAD	STATION	OFFSET	TYPE	EACH	EACH	EACH	EACH
(NO ATTENUATORS IN THIS SUBSTAGE)							

	TEST LEVEL 2 ATTENUATORS NEW OR RELOCATED	TEST LEVEL 2 ATTENUATORS TO REMAIN	ATTENUATORS FROM PREVIOUS STAGE	IMPACT ATTENUATORS TEMPORARY (NON-REDRCTVE), TEST LVL 2	IMPACT ATTENUATORS, TEMPORARY (FULLY REDRCTVE, NARROW TEST LVL 2	IMPACT ATTENUATORS, RELOCATE (FULLY REDRCTVE, TEST LVL 2	IMPACT ATTENUATORS, RELOCATE (NON-REDRCTVE), TEST LVL 2
WIDE	0	0	0	0	-	-	0
NARROW	0	0	3	-	0	0	-

FILE NAME = D468620-sht-schedule-C-00.dgn	DESIGNED - HTL	REVISED -
USER NAME = TERRA	DRAWN - KV	REVISED -
PLOT DATE = 7/29/2012	CHECKED - DA/LVA	REVISED -
	DATE - 7/20/2012	REVISED -

TERRA ENGINEERING LTD.

STATE OF ILLINOIS
DEPARTMENT OF TRANSPORTATION

MAINTENANCE OF TRAFFIC
PRE STAGE - SUB STAGE C - SCHEDULE OF QUANTITIES

SCALE: | SHEET NO. 5 OF 85 SHEETS | STA. | TO STA.

F.A.I. RTE.	SECTION	COUNTY	TOTAL SHEETS	SHEET NO.
•	90-[14R;(14HB-4,14,14HVB)BR]	TAZEWELL	2433	81

CONTRACT NO. 68620

ILLINOIS FED. AID PROJECT

• 74 & 155

STA	MAINLINE	DIRECTION	RT/LT	MUTCD CODE	DESCRIPTION	QTY
ADV	I-474	EB	Both	W9-3(O)-48	CENTER LANE CLOSED AHEAD	2
ADV	I-474	EB	Both	W16-3A(O)-3612	XX MILES	2
ADV	I-474	EB	Both	W20-I103(O)-48	ROAD CONSTRUCTION AHEAD	2
ADV	I-474	EB	Both	Work Zone Info Sign	WORK ZONE INFORMATION	2
ADV	I-74	EB	Both	W9-3(O)-48	CENTER LANE CLOSED AHEAD	2
ADV	I-74	EB	Both	W16-3A(O)-3612	XX MILES	2
ADV	I-74	EB	Both	W20-I103(O)-48	ROAD CONSTRUCTION AHEAD	2
ADV	I-74	EB	Both	Work Zone Info Sign	WORK ZONE INFORMATION	2
ADV	I-74	WB	RT	STD 701400-05	IDOT ADVANCED SIGNING STANDARD	1
459+30	I-74	WB	Both	G20-I103(O)-3660	END WORKZONE SPEED LIMIT	2
474+00	I-74	EB	Both	W9-3(O)-48	CENTER LANE CLOSED AHEAD	2
485+00	I-74	EB	Both	W9-3(O)-48	CENTER LANE CLOSED AHEAD	2
535+15	I-74	WB	RT	D9-I906(G)-4236	EXIT (ARROW) RIGHT	1
542+50	I-74	WB	RT	D4-I102(G)-3648	EXIT OPEN AHEAD	0
546+80	I-74	EB	RT	W4-1R(O)-48	MERGING TRAFFIC RIGHT SYMBOL	1
564+00	I-74	EB	Both	R2-1-3648	SPEED LIMIT XX	2
564+00	I-74	EB	Both	R2-I106-3618	$375 FINE MINIMUM	2
564+00	I-74	EB	Both	W21-I113(O)-3612	BEGINS	2
564+00	I-74	EB	Both	W21-I115(O)-3618	WORK ZONE	2
565+00	I-74	WB	Both	R2-1-3648	SPEED LIMIT XX	2
565+00	I-74	WB	Both	R2-I106-3618	$375 FINE MINIMUM	2
565+00	I-74	WB	Both	W21-I113(O)-3612	BEGINS	2
565+00	I-74	WB	Both	W21-I115(O)-3618	WORK ZONE	2
574+00	I-74	EB	RT	D4-I102(G)-3648	EXIT OPEN AHEAD	0
574+00	I-74	EB	RT	W13-1(O)-2424	ADVISORY SPEED (PLAQUE)	1
582+50	I-74	WB	RT	W4-1R(O)-48	MERGING TRAFFIC RIGHT SYMBOL	1
585+00	I-74	EB	RT	D4-I102(G)-3648	EXIT OPEN AHEAD	0
594+15	I-74	WB	RT	R1-2-48	YIELD	1
596+85	I-74	WB	RT	W4-1R(O)-48	MERGING TRAFFIC RIGHT SYMBOL	1
601+00	I-74	WB	Both	R2-1-3648	SPEED LIMIT XX	2
601+00	I-74	WB	Both	R2-I106-3618	$375 FINE MINIMUM	2
601+00	I-74	WB	Both	W21-I113(O)-3612	BEGINS	2
601+00	I-74	WB	Both	W21-I115(O)-3618	WORK ZONE	2
608+00	I-74	EB	RT	W4-1R(O)-48	MERGING TRAFFIC RIGHT SYMBOL	1
611+73	I-74	EB	RT	R1-2-48	YIELD	1
618+00	I-74	EB	RT	R1-2-48	YIELD	1
624+00	I-74	WB	Both	W4-2R(O)-48	LANE ENDS RIGHT SYMBOL	2
625+00	I-74	EB	Both	G20-I103(O)-3660	END WORKZONE SPEED LIMIT	2
113+00	Ex Ramp A	WB	Both	W3-2(O)-48	YIELD AHEAD (ARROW)	2
209+50	Ex Ramp B	WB	LT	W20-7(O)-48	FLAGGER SYMBOL	1
204+50	Ex Ramp B	WB	RT	W5-4(O)-48	RAMP NARROWS	1
204+50	Ex Ramp B	WB	RT	W13-1(O)-2424	ADVISORY SPEED (PLAQUE)	1
412+50	Ex Ramp D	EB	LT	W3-2(O)-48	YIELD AHEAD (ARROW)	1
207+50	Ex Ramp E	NB	LT	W20-7(O)-48	FLAGGER SYMBOL	1
334+00	Ex Ramp F	EB	LT	W20-7(O)-48	FLAGGER SYMBOL	1
115+00	Ramp H	WB	RT	W20-7(O)-48	FLAGGER SYMBOL	1
110+00	Ramp H	WB	RT	W5-4(O)-48	RAMP NARROWS	1
110+00	Ramp H	WB	RT	W13-1(O)-2424	ADVISORY SPEED (PLAQUE)	1
105+00	Ramp H	WB	Both	W20-I103(O)-48	ROAD CONSTRUCTION AHEAD	2
ADV	I-155	NB	RT	STD 701400-05	IDOT ADVANCED SIGNING STANDARD	1
00+20	I-155	SB	RT	W5-4(O)-48	RAMP NARROWS	1
00+20	I-155	SB	RT	W13-1(O)-2424	ADVISORY SPEED (PLAQUE)	1
5+20	I-155	SB	RT	W20-7(O)-48	FLAGGER SYMBOL	1
15+00	I-155	SB	Both	W4-3L(O)-48	ADDED LANE RIGHT SYMBOL	2
23+00	I-155	NB	RT	W5-4(O)-48	RAMP NARROWS	1
23+00	I-155	NB	RT	W13-1(O)-2424	ADVISORY SPEED (PLAQUE)	1
25+00	I-155	SB	Both	G20-I103(O)-3660	END WORKZONE SPEED LIMIT	2
26+00	I-155	NB	Both	W20-I103(O)-48	ROAD CONSTRUCTION AHEAD	2

STA	MAINLINE	DIRECTION	RT/LT	MUTCD CODE	DESCRIPTION	QTY
43+00	I-155	NB	Both	R2-1-3648	SPEED LIMIT XX	1
43+00	I-155	NB	Both	R2-I106-3618	$375 FINE MINIMUM	1
43+00	I-155	NB	Both	W21-I113(O)-3612	BEGINS	1
43+00	I-155	NB	Both	W21-I115(O)-3618	WORK ZONE	1
46+00	I-155	NB	RT	W4-3R(O)-48	ADDED LANE RIGHT SYMBOL	1
55+25	I-155	NB	Both	R2-1-3648	SPEED LIMIT XX	2
55+25	I-155	NB	Both	R2-I106-3618	$375 FINE MINIMUM	2
55+25	I-155	NB	Both	W21-I113(O)-3612	BEGINS	2
55+25	I-155	NB	Both	W21-I115(O)-3618	WORK ZONE	2
404+00	Ex Ramp D Morton	EB	RT	W20-I905(O)-48	RAMP WORK AHEAD	1
405+00	Ex Ramp D Morton	EB	RT	W5-4(O)-48	RAMP NARROWS	1
505+50	Ex Ramp E Morton	WB	LT	W20-7(O)-48	FLAGGER SYMBOL	1
ADV	Alexander St.	EB	RT	M1-1-24	#N/A	1
ADV	Alexander St.	EB	RT	M3-4(O)-2412	#N/A	1
ADV	Alexander St.	EB	RT	W20-I103(O)-36	ROAD CONSTRUCTION AHEAD	1
ADV	Bond St.	EB	RT	W20-I103(O)-36	ROAD CONSTRUCTION AHEAD	1
ADV	Clark St.	EB	RT	W20-I103(O)-36	ROAD CONSTRUCTION AHEAD	1
22+00	Morton	NB	RT	W20-I103(O)-36	ROAD CONSTRUCTION AHEAD	1
24+00	Morton	NB	RT	W1-4bL(O)-36	2 LANES SHIFT LEFT (ARROWS)	1
26+00	Morton	NB	RT	W21-1A(O)-36	WORKERS SYMBOL	1
44+23	Morton	SB	RT	W5-4(O)-36	RAMP NARROWS	1
44+23	Morton	SB	RT	W13-1(O)-2424	ADVISORY SPEED (PLAQUE)	1
49+75	Morton	SB	RT	W13-4(O)-1818	ON RAMP	1
49+75	Morton	SB	RT	W20-I103(O)-36	ROAD CONSTRUCTION AHEAD	1
51+25	Morton	SB	RT	W21-1A(O)-36	WORKERS SYMBOL	1
55+25	Morton	SB	RT	W20-I103(O)-48	ROAD CONSTRUCTION AHEAD	1

TEMPORARY SIGN SCHEDULE
(INCLUDED IN TRAFFIC CONTROL AND PROTECTION (SPECIAL))

SIGN INDEX #	SIGN CODE	STA	OFFSET	DTL SHT #	ALIGNMENT	DIRECTION	EX OVRHD STR	EX STANDARD	EX SPECIAL	TEMP STD	TEMP SPCL	PROPOSED	DESCRIPTION	NEW STA.	NEW OFFSET	REMOVE SIGN PANEL ASSEMBLY TYPE A	REMOVE SIGN PANEL ASSEMBLY TYPE B	REMOVE GROUND MOUNTED SIGN SUPPORT	REMOVE CONCRETE FOUNDATIONS MOUNT	TEMPORARY SIGN PANEL ASSEMBLY	TEMPORARY SIGN PANEL OVERLAY
																EACH	EACH	EACH	EACH	SQ FT	SQ FT
21.03	W4-1L	13+16.00	65.88	-	I-155	SB		X					MERGE								16
21.12	W13-3	13+19.00	-82.04	-	I-155	NB		X					40 MPH RAMP								20
21.05-1	R2-1	19+16.00	100.77	-	I-155	SB		X					65 MPH				0.50				
21.05-2	R2-I102	19+16.00	100.77	-	I-155	SB		X					45 MPH MIN				0.50				
23.02	W4-1L	48+79.82	-72.76	-	I-155	NB		X					MERGE								16
2.01-1	R2-1	453+60.00	87.35	-	I-74	EB		X					SPEED LIMIT - 65								20
2.01-2	R2-I102	453+60.00	87.35	-	I-74	EB		X					SPEED LIMIT - MIN 45								12
6.06-1	R2-1	510+00.00	-68.50	-	I-74	WB		X					SPEED LIMIT - 65				0.50				
6.06-2	R2-I102	510+00.00	-68.50	-	I-74	WB		X					SPEED LIMIT - MIN 45				0.50				
7.01	D9-I105	525+04.00	12.33	-	I-74	EB			X				EXIT 101 W/ ARROW	502+45.00	44.00			2	2	RELOCATE	
12.01	W13-3	584+39.00	97.25	-	I-74	EB		X					RAMP SPEED 50 MPH				1.00				
12.03	E5-1A	585+61.65	62.84	-	I-74	EB		X					EXIT 102 A	580+45.00	48.00			2	2	RELOCATE	
12.05	D10-6	586+30.08	62.41	-	I-74	EB		X					MILE MARKER 102	587+89.97	62.66	1.00				RELOCATE	
12.04	W4-1R	588+57.00	-65.87	-	I-74	WB		X					MERGE	588+64.32	-69.80		1.00			RELOCATE	
4T.01				266	I-74	EB					X		I-74 USE LEFT LANE	480+00.00	6.43					10	
4T.02				266	I-74	EB					X		I-155 USE RIGHT LANE	480+00.00	77.82					11	
17.03	R3-I031	28+00.00	-0.26	-	MORTON	NB			X				2 ARROWS AHEAD, 1 ARROW TURN								6
18.03	R3-I033	31+01.00	43.54	-	MORTON	NB			X				2 ARROWS AHEAD, 1 ARROW TURN ONLY	29+00.00	55.27	1.00				RELOCATE	
17T.03				272	MORTON	NB					X		LEFT LANE ARROW UP, RIGHT LANE UP/RIG	28+01.70	-0.26					6	
18T.03				272	MORTON	NB					X		LEFT LANE ARROW UP, RT LANE UP/RT ON	29+30.00	39.50					6	
14.06	W13-3	204+52.40	21.50	-	MORTON RAMP B	-		X					RAMP SPEED 40 MPH								20
															TOTALS	2	4	4	4	34	110

TEMPORARY SIGN SCHEDULE

STA	MAINLINE	DIRECTION	RT/LT	MUTCD CODE	DESCRIPTION	QTY
ADV	I-474	EB	RT	STD 701400-05	IDOT ADVANCED SIGNING STANDARD	1
ADV	I-74	EB	Both	R2-1-3648	SPEED LIMIT XX	4
ADV	I-74	EB	Both	R2-I106-3618	$375 FINE MINIMUM	4
ADV	I-74	EB	Both	W16-3A(O)-3612	XX MILES	6
ADV	I-74	EB	Both	W20-I103(O)-48	ROAD CONSTRUCTION AHEAD	6
ADV	I-74	EB	Both	W21-I113(O)-3612	BEGINS	2
ADV	I-74	EB	Both	W21-I115(O)-3618	WORK ZONE	2
ADV	I-74	EB	Both	Work Zone Info Sign	WORK ZONE INFORMATION	2
ADV	I-74	WB	Both	STD 701400-05	IDOT ADVANCED SIGNING STANDARD	1
483+00	I-74	EB	Both	W20-5(O)-48	RIGHT LANE CLOSED 1/2 MILE	2
509+00	I-74	WB	Both	G20-I103(O)-3660	END WORKZONE SPEED LIMIT	2
509+00	I-74	EB	Both	W13-I907(O)-1818	ON I-74	2
509+00	I-74	EB	Both	W20-5(O)-48	RIGHT LANE CLOSED 1/2 MILE	2
520+00	I-74	EB	Both	W4-2R(O)-48	LANE ENDS RIGHT SYMBOL	2
520+00	I-74	WB	RT	W4-3R(O)-48	ADDED LANE RIGHT SYMBOL	1
530+00	I-74	WB	RT	W20-I900R-4836	CRASH INVESTIGATION SITE (ARROW RIGHT)	1
534+50	I-74	WB	RT	D9-I906(G)-4236	EXIT (ARROW) RIGHT	1
542+50	I-74	WB	RT	D4-I102(G)-3648	EXIT OPEN AHEAD	1
542+85	I-74	EB	Both	R2-1-3648	SPEED LIMIT XX	2
542+85	I-74	EB	Both	R2-I106-3618	$375 FINE MINIMUM	2
542+85	I-74	EB	Both	W21-I113(O)-3612	BEGINS	2
542+85	I-74	EB	Both	W21-I115(O)-3618	WORK ZONE	2
547+90	I-74	EB	RT	W4-1R(O)-48	MERGING TRAFFIC RIGHT SYMBOL	1
550+00	I-74	EB	RT	R1-2-48	YIELD	1
554+30	I-74	EB	RT	R1-2-48	YIELD	1
574+00	I-74	EB	RT	D4-I102(G)-3648	EXIT OPEN AHEAD	1
574+00	I-74	EB	RT	W13-1(O)-2424	ADVISORY SPEED (PLAQUE)	1
585+00	I-74	EB	RT	D4-I102(G)-3648	EXIT OPEN AHEAD	1
586+00	I-74	WB	RT	W4-1R(O)-48	MERGING TRAFFIC RIGHT SYMBOL	1
589+50	I-74	WB	RT	R1-2-48	YIELD	1
593+00	I-74	WB	RT	R1-2-48	YIELD	1
596+85	I-74	WB	RT	W4-1R(O)-48	MERGING TRAFFIC RIGHT SYMBOL	1
608+00	I-74	EB	RT	W4-3R(O)-48	ADDED LANE RIGHT SYMBOL	1
622+00	I-74	EB	Both	G20-I103(O)-3660	END WORKZONE SPEED LIMIT	2
628+00	I-74	WB	Both	R2-1-3648	SPEED LIMIT XX	2
628+00	I-74	WB	Both	R2-I106-3618	$375 FINE MINIMUM	2
628+00	I-74	WB	Both	W21-I113(O)-3612	BEGINS	2
628+00	I-74	WB	Both	W21-I115(O)-3618	WORK ZONE	2
113+00	Ex Ramp A	WB	Both	W3-2(O)-48	YIELD AHEAD (ARROW)	2
204+50	Ex Ramp B	WB	RT	W5-4(O)-48	RAMP NARROWS	1
204+50	Ex Ramp B	WB	RT	W13-1(O)-2424	ADVISORY SPEED (PLAQUE)	1
209+50	Ex Ramp B	WB	LF	W20-7(O)-48	FLAGGER SYMBOL	1
412+58	Ex Ramp D	WB	LF	W4-3R(O)-48	ADDED LANE RIGHT SYMBOL	1
213+00	Ex Ramp E	EB	Both	W3-2(O)-48	YIELD AHEAD (ARROW)	2
505+50	Ex Ramp E Morton	WB	LT	W20-7(O)-48	FLAGGER SYMBOL	1
115+00	Ramp H	WB	RT	W20-7(O)-48	FLAGGER SYMBOL	1
110+00	Ramp H	WB	RT	W5-4(O)-48	RAMP NARROWS	1
110+00	Ramp H	WB	RT	W13-1(O)-2424	ADVISORY SPEED (PLAQUE)	1
105+00	Ramp H	WB	Both	W20-I103(O)-48	ROAD CONSTRUCTION AHEAD	2
ADV	I-155	NB	RT	STD 701400-05	IDOT ADVANCED SIGNING STANDARD	1
ADV	I-155 Ramp	NB	Both	W20-I103(O)-48	ROAD CONSTRUCTION AHEAD	2
39+65	I-155	NB	RT	R1-2-48	YIELD	1
40+35	I-155	NB	RT	R1-2-48	YIELD	1
45+00	I-155	NB	RT	W4-1R(O)-48	MERGING TRAFFIC RIGHT SYMBOL	1
46+00	I-155	NB	Both	W3-2(O)-48	YIELD AHEAD (ARROW)	2
55+25	I-155	NB	Both	R2-1-3648	SPEED LIMIT XX	2
55+25	I-155	NB	Both	R2-I106-3618	$375 FINE MINIMUM	2
55+25	I-155	NB	Both	W21-I113(O)-3612	BEGINS	2
55+25	I-155	NB	Both	W21-I115(O)-3618	WORK ZONE	2

STA	MAINLINE	DIRECTION	RT/LT	MUTCD CODE	DESCRIPTION	QTY
13+80	Morton	NB	RT	W20-I103(O)-36	ROAD CONSTRUCTION AHEAD	1
14+70	Morton	NB	RT	W16-5pR(O)-2418	SUPPLEMENTAL ARROW RIGHT	1
14+70	Morton	NB	RT	W20-I103(O)-36	ROAD CONSTRUCTION AHEAD	1
15+20	Morton	WB	RT	W16-5pL(O)-2418	SUPPLEMENTAL ARROW LEFT	1
15+20	Morton	WB	RT	W20-I103(O)-36	ROAD CONSTRUCTION AHEAD	1
16+35	Morton	NB	RT	W1-4bR(O)-36	2 LANES SHIFT RIGHT (ARROWS)	1
18+35	Morton	NB	RT	W21-1A(O)-36	WORKERS SYMBOL	1
34+00	Morton	SB	RT	W1-4bL(O)-36	2 LANES SHIFT LEFT (ARROWS)	1
39+50	Morton	NB	RT	W20-I900R-4836	CRASH INVESTIGATION SITE (ARROW RIGHT)	1
41+00	Morton	NB	RT	W1-4bL(O)-36	2 LANES SHIFT LEFT (ARROWS)	1
45+50	Morton	SB	RT	W13-4(O)-1818	ON RAMP	1
45+50	Morton	SB	RT	W20-7(O)-36	FLAGGER SYMBOL	1
48+00	Morton	SB	RT	W21-1A(O)-36	WORKERS SYMBOL	1
49+50	Morton	SB	RT	W20-I902R(O)-36	RIGHT LANE EXIT ONLY	1
52+25	Morton	SB	RT	W1-4bR(O)-36	2 LANES SHIFT RIGHT (ARROWS)	1
54+10	Morton	SB	RT	W20-I103(O)-36	ROAD CONSTRUCTION AHEAD	1
ADV	Entrance	WB	RT	W16-5pR(O)-2418	SUPPLEMENTAL ARROW RIGHT	1
ADV	Entrance	WB	RT	W20-I103(O)-36	ROAD CONSTRUCTION AHEAD	1
ADV	Caterpillar Drvwy(L)	WB	RT	W16-5pR(O)-2418	SUPPLEMENTAL ARROW RIGHT	1
ADV	Caterpillar Drvwy(L)	WB	RT	W20-I103(O)-36	ROAD CONSTRUCTION AHEAD	1
ADV	Caterpillar Drvwy(R)	WB	RT	W16-5pR(O)-2418	SUPPLEMENTAL ARROW RIGHT	1
ADV	Caterpillar Drvwy(R)	WB	RT	W20-I103(O)-36	ROAD CONSTRUCTION AHEAD	1
ADV	Alexander St.	WB	RT	W16-5pL(O)-2418	SUPPLEMENTAL ARROW LEFT	1
ADV	Alexander St.	WB	RT	W20-I103(O)-36	ROAD CONSTRUCTION AHEAD	1
ADV	Bond St.	EB	RT	W16-5pL(O)-2418	SUPPLEMENTAL ARROW LEFT	1
ADV	Bond St.	EB	RT	W20-I103(O)-36	ROAD CONSTRUCTION AHEAD	1
ADV	Clark St.	EB	RT	W20-I103(O)-36	ROAD CONSTRUCTION AHEAD	1

TEMPORARY SIGN SCHEDULE

(INCLUDED IN TRAFFIC CONTROL AND PROTECTION (SPECIAL))

SIGN INDEX #	SIGN CODE	STA	OFFSET	DTL SHT #	ALIGNMENT	DIRECTION	EX OVRHD STR	EX STANDARD	EX SPECIAL	TEMP STD	TEMP SPCL	PROPOSED	DESCRIPTION	NEW STA.	NEW OFFSET	REMOVE SIGN PANEL ASSEMBLY TYPE A	REMOVE SIGN PANEL – TYPE 1	REMOVE GROUND MOUNTED SIGN SUPPORT	REMOVE CONCRETE FOUNDATIONS MOUNT	TEMPORARY SIGN PANEL ASSEMBLY	TEMPORARY SIGN PANEL OVERLAY	CONSTRUCT PROPOSED SIGN (SEE SIGN PLAN)
																EACH	SQ FT	EACH	EACH	SQ FT	SQ FT	
12.02	D10-6	586+20.00	-87.40	–	I-74	WB		X					MILE MARKER 102	586+19.73	-91.40	1.00				RELOCATE		
12.03	E5-1A	580+45.00	48.00	–	I-74	EB		X					EXIT 102 A	582+00.00	42.40					RELOCATE		
14.01	W4-1R	606+43.19	70.86	–	I-74	EB		X					MERGE								16	
14.06	W13-3	204+52.40	21.50	–	MORTON RAMP B	–		X					RAMP SPEED 40 MPH								REMOVE	
21.03	W4-1L	13+16.00	65.88	–	I-155	SB		X					MERGE								REMOVE	
23.02	W4-1L	48+79.82	-72.76	–	I-155	NB		X					MERGE								REMOVE	
22.03	R2-I102	24+77.00	88.13	–	I-155	SB			X				SPEED LIMIT, TRUCKS TRAILERS 55					2	2			
4T.02		480+00.00	77.82	266	I-74	EB					X		I-155 USE RIGHT LANE							REMOVE		
4T.01		480+00.00	6.43	266	I-74	EB					X		I-74 USE LEFT LANE							REMOVE		
7.01	D9-I105	502+45.00	44.00	–	I-74	EB			X				EXIT 101 W/ ARROW	526+27.85	65.31					RELOCATE		
18.03	R3-I033	Store	Store	–	MORTON	NB			X				2 ARROWS AHEAD, 1 ARROW TURN ONLY	29+00.00	55.27					INSTALL FROM STORAGE		
17T.03		28+01.70	-0.26	272	MORTON	NB					X		LEFT LANE ARROW UP, RIGHT LANE UP/RIGHT							REMOVE		
17.03	R3-I031	28+00.00	-0.26	–	MORTON	NB			X				2 ARROWS AHEAD, 1 ARROW TURN								REMOVE	
18T.03		29+30.00	39.50	272	MORTON	NB					X		LEFT LANE ARROW UP, RT LANE UP/RT ONLY	29+30.00	41.51					RELOCATE		
18.17-1	M3-4	34+75.00	-0.77	–	MORTON	SB		X					CARDINAL DIRECTION – WEST	32+00.00	52.36	0.33				RELOCATE		
18.17-2	M1-1	34+75.00	-0.77	–	MORTON	SB		X					INTERSTATE ROUTE	32+00.00	52.36	0.33				RELOCATE		
18.17-3	M6-I037	34+75.00	-0.77	–	MORTON	SB			X				MERGE RIGHT	32+00.00	52.36	0.33				RELOCATE		
18T.02		–	–	272	MORTON	SB					X		LEFT LANE ARROW UP/LEFT ONLY, RIGHT LANE UP	33+20.00	-9.00					6		
19.05-1	R1-1	42+31.00	50.67	–	MORTON	NB		X					STOP SIGN				9					
19.07	R1-2	42+86.00	48.18	–	MORTON	NB		X					YIELD			1.00						
19.09	R1-2	43+16.00	74.39	–	MOTRON	NB		X					YIELD			1.00						
19.11	R1-1	9+51.39	2.36	–	MORTON RAMP B	–		X					STOP SIGN			1.00						
18.02-1	R1-1	31+25.00	-61.97	–	MORTON	SB		X					STOP SIGN				9					
PR19.13	W3-3			–	MORTON RAMP B	WB						X	TRAFFIC LIGHT AHEAD	PR	PR							X
															TOTALS	5	18	2	2	6	16	

TEMPORARY SIGN SCHEDULE

FILE NAME =	DESIGNED - HTL	REVISED -	
D468620-sht-sign02-B-00.dgn	DRAWN - KV	REVISED -	
USER NAME = TERRA	CHECKED - DA/LVA	REVISED -	
PLOT DATE = 7/18/2012	DATE - 7/20/2012	REVISED -	

TERRA ENGINEERING LTD.

STATE OF ILLINOIS
DEPARTMENT OF TRANSPORTATION

MAINTENANCE OF TRAFFIC
PRE STAGE – SUB STAGE B – SIGN SCHEDULE

SCALE: | SHEET NO. 9 OF 85 SHEETS | STA. | TO STA.

F.A.I. RTE.	SECTION	COUNTY	TOTAL SHEETS	SHEET NO.
•	90-(14R;(14HB-4,14,14HVB)BRI	TAZEWELL	2433	85

CONTRACT NO. 68620

ILLINOIS FED. AID PROJECT

• 74 & 155

STA	MAINLINE	DIRECTION	RT/LT	MUTCD CODE	DESCRIPTION	QTY
ADV	I-474	EB	RT	STD 701400-05	IDOT ADVANCED SIGNING STANDARD	1
ADV	I-74	EB	Both	R2-1-3648	SPEED LIMIT XX	4
ADV	I-74	EB	Both	R2-I106-3618	$375 FINE MINIMUM	4
ADV	I-74	EB	Both	W16-3A(O)-3612	XX MILES	6
ADV	I-74	EB	Both	W20-I103(O)-48	ROAD CONSTRUCTION AHEAD	6
ADV	I-74	EB	Both	W21-I113(O)-3612	BEGINS	2
ADV	I-74	EB	Both	W21-I115(O)-3618	WORK ZONE	2
ADV	I-74	EB	Both	Work Zone Info Sign	WORK ZONE INFORMATION	2
ADV	I-74	WB	Both	STD 701400-05	IDOT ADVANCED SIGNING STANDARD	1
14+15	Morton	NB	RT	W20-I103(O)-36	ROAD CONSTRUCTION AHEAD	1
14+70	Morton	NB	RT	W16-5pR(O)-2418	SUPPLEMENTAL ARROW RIGHT	1
14+70	Morton	NB	RT	W20-I103(O)-36	ROAD CONSTRUCTION AHEAD	1
15+20	Morton	SB	LT	W16-5pL(O)-2418	SUPPLEMENTAL ARROW LEFT	1
15+20	Morton	SB	LT	W20-I103(O)-36	ROAD CONSTRUCTION AHEAD	1
ADV	Entrance	WB	RT	W16-5pR(O)-2418	SUPPLEMENTAL ARROW RIGHT	1
ADV	Entrance	WB	RT	W20-I103(O)-36	ROAD CONSTRUCTION AHEAD	1
ADV	Caterpillar Drvwy(L)	WB	RT	W16-5pR(O)-2418	SUPPLEMENTAL ARROW RIGHT	1
ADV	Caterpillar Drvwy(L)	WB	RT	W20-I103(O)-36	ROAD CONSTRUCTION AHEAD	1
23+70	Morton	SB	RT	R3-2-36	NO LEFT TURN (ARROW)	2
ADV	Alexander St.	EB	RT	W16-5pL(O)-2418	SUPPLEMENTAL ARROW LEFT	1
ADV	Alexander St.	EB	RT	W20-I103(O)-36	ROAD CONSTRUCTION AHEAD	1
32+00	Morton	SB	RT	W24-1AR(O)-36	DOUBLE REVERSE CURVE RIGHT (ARROWS)	1
34+00	Morton	SB	RT	W1-4bL(O)-36	2 LANES SHIFT LEFT (ARROWS)	1
34+75	Morton	NB	RT	W4-2L(O)-36	LANE ENDS LEFT SYMBOL	1
39+50	Morton	NB	RT	W20-I900R-4836	CRASH INVESTIGATION SITE (ARROW RIGHT)	1
48+00	Morton	SB	RT	W21-1A(O)-36	WORKERS SYMBOL	1
49+50	Morton	SB	RT	W20-I902R(O)-36	RIGHT LANE EXIT ONLY	1
52+25	Morton	SB	RT	W1-4bR(O)-36	2 LANES SHIFT RIGHT (ARROWS)	1
54+10	Morton	SB	RT	W20-I103(O)-36	ROAD CONSTRUCTION AHEAD	1
ADV	Bond St.	EB	RT	W16-5pL(O)-2418	SUPPLEMENTAL ARROW LEFT	1
ADV	Bond St.	EB	RT	W20-I103(O)-36	ROAD CONSTRUCTION AHEAD	1
ADV	Clark St.	EB	RT	W20-I103(O)-36	ROAD CONSTRUCTION AHEAD	1

TEMPORARY SIGN SCHEDULE

(INCLUDED IN TRAFFIC CONTROL AND PROTECTION (SPECIAL))

SIGN INDEX #	SIGN CODE	STA	OFFSET	DTL SHT #	ALIGNMENT	DIRECTION	EX OVRHD STR	EX STANDARD	EX SPECIAL	TEMP STD	TEMP SPCL	PROPOSED	DESCRIPTION	NEW STA.	NEW OFFSET	REMOVE SIGN PANEL ASSEMBLY TYPE A	REMOVE SIGN PANEL ASSEMBLY TYPE B	TEMPORARY SIGN PANEL ASSEMBLY
																EACH	EACH	SQ FT
17.03	R3-I031	28+00.00	-0.26	-	MORTON	NB			X				2 ARROWS AHEAD, 1 ARROW TURN			1.00		
18.05-4	R3-2	31+19.00	4.17	-	MORTON			X					NO LEFT TURN				0.25	
18.05-3	M6-1R	31+19.00	4.17	-	MORTON	NB		X					BLUE ARROW RIGHT				0.25	
18.05-1	M3-2	31+19.00	4.17	-	MORTON	NB		X					CARDINAL DIRECTION - EAST	26+05.00	45.16		0.25	RELOCATE
18.05-2	M1-1	31+19.00	4.17	-	MORTON	NB		X					INTERSTATE ROUTE	26+05.00	45.16		0.25	RELOCATE
18T.02		33+20.00	-9.00	272	MORTON	SB					X		LEFT LANE ARROW UP/LEFT ONLY, RIGHT LANE UP					REMOVE
															TOTALS	1	1	0

TEMPORARY SIGN SCHEDULE

LOCATION			AGGREGATE SUBGRADE IMPROVEMENT 8"	AGGREGATE SUBGRADE IMPROVEMENT 12"	STABILIZED SUBBASE HOT-MIX ASPHALT, 4"	AGGREGATE SHOULDERS, TYPE B 6"	PORTLAND CEMENT CONCRETE SHOULDERS 11"	PIPE UNDERDRAINS 4"	TEMPORARY PAVEMENT REMOVAL	AGGREGATE SHOULDER REMOVAL	WHITEWASHING FOR CONCRETE PAVEMENT	TEMPORARY PAVEMENT	TEMPORARY RAMP	GLARE SCREEN (NEW LOCATION)	GLARE SCREEN TO REMAIN	GLARE SCREEN ON-SITE	TEMPORARY CONCRETE BARRIER (NEW LOCATION)	TEMPORARY CONCRETE BARRIER TO REMAIN	TEMPORARY CONCRETE BARRIER ON-SITE
ROAD	STATION FROM	STATION TO	SQ YD	SQ YD	SQ YD	SQ YD	SQ YD	FOOT	SQ YD	CU YD	SQ YD	SQ YD	SQ YD	FOOT	FOOT	FOOT	FOOT	FOOT	FOOT
I-474	-	456+00.00	0	0	0	0	0	0	0	0	0	0	0	0	0	0	0.0	0.0	36362.5
I-74	456+00.00	471+00.00	0	969	969	34	927	805	0	0	969	753	0	0	0		1675.0	0.0	
I-74	471+00.00	486+00.00	0	0	0	0	0	0	0	0	0	0	1352	0	0	GLARE	3000.0	0.0	TEMPORARY
I-74	486+00.00	501+00.00	0	0	0	0	0	0	0	0	0	0	1667	0	0	SCREEN	3000.0	0.0	CONCRETE
I-74	501+00.00	516+00.00	0	0	0	0	0	0	0	0	0	3448	806	0	0	FROM	3000.0	0.0	BARRIER
I-74	516+00.00	531+00.00	0	0	0	0	0	0	0	0	0	6579	0	0	0	PREVIOUS	2625.0	0.0	FROM
RAMP G/H	118+50.00	101+47.00	0	0	0	0	0	0	0	0	0	0	0	0	0	STAGE	0.0	0.0	PREVIOUS
I-74	531+00.00	546+00.00	0	0	0	9	0	0	0	0	0	5723	0	0	0		2500.0	0.0	STAGE
I-74	546+00.00	561+00.00	0	0	0	0	0	0	0	0	0	4551	500	0	0		2762.5	0.0	
I-74	561+00.00	576+00.00	0	0	0	0	0	0	0	0	0	380	1526	0	0	FOOT	2562.5	0.0	FOOT
I-74	576+00.00	591+00.00	0	85	85	94	85	191	0	1	85	4711	149	0	0	0	4012.5	0.0	775.0
I-74	591+00.00	606+00.00	0	311	311	190	311	700	0	5	311	4337	0	0	0		2950.0	0.0	
I-74	606+00.00	621+00.00	0	876	876	166	813	1137	0	0	876	337	0	0	0	RELOCATE	1300.0	0.0	RELOCATE
I-74	621+00.00	636+00.00	0	66	66	11	61	100	0	0	66	0	0	0	0	MODULAR	125.0	0.0	TEMPORARY
I-74	636+00.00	640+00.00	0	0	0	0	0	0	0	0	0	0	0	0	0	GLARE SCREEN	0.0	0.0	CONCRETE
I-155	00+00.00	09+00.00	0	0	0	237	0	0	0	0	0	2504	0	0	0	SYSTEM	2237.5	0.0	BARRIER
I-155	09+00.00	23+00.00	0	354	354	323	336	320	0	0	354	2641	0	0	0		2900.0	0.0	
I-155	23+00.00	37+50.00	0	351	351	42	330	374	0	0	351	0	0	0	0	FOOT	487.5	0.0	FOOT
I-155	37+50.00	51+00.00	0	0	0	0	0	0	0	0	0	0	0	0	0	0	0.0	0.0	775.0
I-155	51+00.00	66+00.00	0	0	0	0	0	0	0	0	0	0	0	0	0		0.0	0.0	
Morton Ave.	16+00.00	28+25.00	0	0	0	0	0	0	0	0	0	0	0	0	0	MODULAR	0.0	0.0	TEMPORARY
Morton Ave.	28+25.00	36+50.00	0	0	0	0	0	0	0	0	0	33	0	0	0	GLARE SCREEN	462.5	0.0	CONCRETE
Morton Ave.	36+50.00	44+75.00	516	0	0	10	0	0	6	0	0	516	0	0	0	SYSTEM	762.5	0.0	BARRIER
Morton Ave.	44+75.00	58+00.00	0	0	0	0	0	0	0	0	0	0	0	0	0		0.0	0.0	
																FOOT			FOOT
		TOTALS	516	3012	3012	1116	2863	3628	6	6	3012	36512	6000	0	0	0	36362.5	0.0	35587.5

LOCATION			PAVEMENT MARKING TAPE, TY III LETTERS & SYMBOLS	PAVEMENT MARKING TAPE, TYPE III 4"	PAVEMENT MARKING TAPE, TYPE III 8"	PAVEMENT MARKING TAPE, TYPE III 12"	PAVEMENT MARKING TAPE, TYPE III 24"	WORK ZONE PAVEMENT MARKING REMOVAL	POLYUREA PAVEMENT MARKING TYPE II LINE 4"	POLYUREA PAVEMENT MARKING TYPE II LINE 8"	POLYUREA PAVEMENT MARKING TYPE II LINE 12"
ROAD	STATION FROM	STATION TO	SQ FT	FOOT	FOOT	FOOT	FOOT	SQ FT	FOOT	FOOT	FOOT
I-474	-	456+00.00	0	5141	0	0	0	433	0	0	0
I-74	456+00.00	471+00.00	0	4361	0	0	0	0	1564	0	0
I-74	471+00.00	486+00.00	0	600	0	0	0	0	6546	0	0
I-74	486+00.00	501+00.00	0	0	0	0	0	0	4875	0	0
I-74	501+00.00	516+00.00	0	0	0	0	0	0	5219	633	0
I-74	516+00.00	531+00.00	0	0	0	0	0	0	7354	1852	0
RAMP G/H	118+50.00	101+47.00	0	0	0	0	0	0	0	0	0
I-74	531+00.00	546+00.00	0	0	0	0	0	546	8032	230	0
I-74	546+00.00	561+00.00	0	0	0	0	0	500	7459	213	0
I-74	561+00.00	576+00.00	0	0	0	0	0	67	8356	0	0
I-74	576+00.00	591+00.00	0	288	0	0	0	1748	8667	759	0
I-74	591+00.00	606+00.00	0	3186	450	0	0	897	3945	400	0
I-74	606+00.00	621+00.00	0	2170	0	0	0	218	2182	105	0
I-74	621+00.00	636+00.00	0	991	0	0	0	500	0	0	0
I-74	636+00.00	640+00.00	0	0	0	0	0	0	0	0	0
I-155	00+00.00	09+00.00	0	0	0	0	0	0	6026	1378	0
I-155	09+00.00	23+00.00	0	682	0	0	0	35	5893	121	0
I-155	23+00.00	37+50.00	0	2838	579	0	0	521	0	0	0
I-155	37+50.00	51+00.00	0	0	0	0	0	408	0	0	0
I-155	51+00.00	66+00.00	0	0	0	0	0	0	0	0	0
Morton Ave.	16+00.00	28+25.00	18	2802	0	576	0	316	0	0	0
Morton Ave.	28+25.00	36+50.00	39	5175	227	348	65	996	0	0	0
Morton Ave.	36+50.00	44+75.00	0	3925	361	0	42	929	0	0	0
Morton Ave.	44+75.00	58+00.00	0	1790	426	0	0	270	0	0	0
		TOTALS	56	33949	2043	924	107	8381	76117	5692	0

	SHORT TERM PAVEMENT MARKING	CHANGEABLE MESSAGE SIGN
	FOOT	CAL MO
TOTAL STAGE 1	5,943	20.75

ATTENUATOR LOCATION SCHEDULE				IMPACT ATTENUATORS WIDE NEW OR RELOCATED	IMPACT ATTENUATORS WIDE TO REMAIN	IMPACT ATTENUATORS NARROW NEW OR RELOCATED	IMPACT ATTENUATORS NARROW TO REMAIN
ROAD	STATION	OFFSET	TYPE	EACH	EACH	EACH	EACH
I-74	459+50.81	34.85	WIDE	1	0	0	0
I-74	582+94.18	56.5	WIDE	1	0	0	0
I-74	605+25.29	-16.25	NARROW		0	1	0
I-155	12+45.23	24.68	NARROW		0	1	0
I-155	40+14.44	-29.63	WIDE	1	0	0	0

	TEST LEVEL 2 ATTENUATORS NEW OR RELOCATED	TEST LEVEL 2 ATTENUATORS TO REMAIN	ATTENUATORS FROM PREVIOUS STAGE	IMPACT ATTENUATORS TEMPORARY (NON-REDRCTVE), TEST LVL 2	IMPACT ATTENUATORS, TEMPORARY (FULLY REDRCTVE, NARROW TEST LVL 2	IMPACT ATTENUATORS, RELOCATE (FULLY REDRCTVE, TEST LVL 2	IMPACT ATTENUATORS, RELOCATE (NON-REDRCTVE), TEST LVL 2
WIDE	0	0	0	0	-	-	0
NARROW	0	0	0	-	0	0	-

	TEST LEVEL 3 ATTENUATORS NEW OR RELOCATED	TEST LEVEL 3 ATTENUATORS TO REMAIN	ATTENUATORS FROM PREVIOUS STAGE	IMPACT ATTENUATORS TEMPORARY (NON-REDRCTVE), TEST LVL 3	IMPACT ATTENUATORS, TEMPORARY (FULLY REDRCTVE, NARROW TEST LVL 3	IMPACT ATTENUATORS, RELOCATE (FULLY REDRCTVE, TEST LVL 3	IMPACT ATTENUATORS, RELOCATE (NON-REDRCTVE), TEST LVL 3
WIDE	3	0	0	3	-	-	0
NARROW	2	0	0	-	2	0	-

FILE NAME = D468620-sht-schedule-01.dgn	DESIGNED - HTL	REVISED -
USER NAME = TERRA	DRAWN - KV	REVISED -
PLOT DATE = 7/29/2012	CHECKED - DA/LVA	REVISED -
	DATE - 7/20/2012	REVISED -

TERRA ENGINEERING LTD.

STATE OF ILLINOIS
DEPARTMENT OF TRANSPORTATION

MAINTENANCE OF TRAFFIC
STAGE 1 SCHEDULE OF QUANTITIES

SCALE: | SHEET NO. 12 OF 85 SHEETS | STA. | TO STA.

F.A.I. RTE.	SECTION	COUNTY	TOTAL SHEETS	SHEET NO.
•	90-[14R;(14HB-4,14,14HVB)BR]	TAZEWELL	2433	88

CONTRACT NO. 68620

ILLINOIS FED. AID PROJECT

• 74 & 155

LOCATION			AGGREGATE SUBGRADE IMPROVEMENT 8"	AGGREGATE SUBGRADE IMPROVEMENT 12"	STABILIZED SUBBASE HOT-MIX ASPHALT, 4"	AGGREGATE SHOULDERS, TYPE B 6"	PORTLAND CEMENT CONCRETE SHOULDERS 11"	PIPE UNDERDRAINS 4"	TEMPORARY PAVEMENT REMOVAL	AGGREGATE SHOULDER REMOVAL	WHITEWASHING FOR CONCRETE PAVEMENT	TEMPORARY PAVEMENT
ROAD	STATION FROM	STATION TO	SQ YD	SQ YD	SQ YD	SQ YD	SQ YD	FOOT	SQ YD	CU YD	SQ YD	SQ YD
I-474	-	456+00.00	0	0	0	0	0	0	0	0	0	0
I-74	456+00.00	471+00.00	0	0	0	0	0	0	0	0	0	0
I-74	471+00.00	486+00.00	0	0	0	0	0	0	0	0	0	0
I-74	486+00.00	501+00.00	0	0	0	0	0	0	0	0	0	0
I-74	501+00.00	516+00.00	0	0	0	0	0	0	0	0	0	0
I-74	516+00.00	531+00.00	0	0	0	0	0	0	0	0	0	0
RAMP G/H	118+50.00	101+47.00	0	0	0	0	0	0	0	0	0	0
I-74	531+00.00	546+00.00	0	0	0	0	0	0	0	0	0	0
I-74	546+00.00	561+00.00	0	0	0	0	0	0	0	0	0	0
I-74	561+00.00	576+00.00	0	0	0	0	0	0	0	0	0	0
I-74	576+00.00	591+00.00	0	0	0	0	0	0	143	8	0	0
I-74	591+00.00	606+00.00	0	0	0	0	0	0	101	6	0	0
I-74	606+00.00	621+00.00	0	0	0	0	0	0	0	0	0	0
I-74	621+00.00	636+00.00	0	0	0	0	0	0	0	0	0	0
I-74	636+00.00	640+00.00	0	0	0	0	0	0	0	0	0	0
I-155	00+00.00	09+00.00	0	0	0	0	0	0	0	0	0	0
I-155	09+00.00	23+00.00	0	0	0	0	0	0	0	0	0	0
I-155	23+00.00	37+50.00	0	0	0	0	0	0	0	0	0	0
I-155	37+50.00	51+00.00	0	0	0	0	0	0	0	0	0	0
I-155	51+00.00	66+00.00	0	0	0	0	0	0	0	0	0	0
Morton Ave.	16+00.00	28+25.00	0	0	0	0	0	0	0	0	0	0
Morton Ave.	28+25.00	36+50.00	0	0	0	0	0	0	28	0	0	0
Morton Ave.	36+50.00	44+75.00	0	0	0	0	0	0	189	8	0	235
Morton Ave.	44+75.00	58+00.00	0	0	0	0	0	0	5	0	0	0
		TOTALS	0	0	0	0	0	0	467	22	0	235

	GLARE SCREEN (NEW LOCATION)	GLARE SCREEN TO REMAIN	GLARE SCREEN TOTAL	TEMPORARY CONCRETE BARRIER (NEW LOCATION)	TEMPORARY CONCRETE BARRIER TO REMAIN	TEMPORARY CONCRETE BARRIER TOTAL
	FOOT	FOOT	FOOT	FOOT	FOOT	FOOT
	0	0	0	0.0	0.0	34912.5
	0	0	GLARE SCREEN FROM PREVIOUS STAGE FOOT	0.0	1675.0	TEMPORARY CONCRETE BARRIER FROM PREVIOUS STAGE FOOT
	0	0		0.0	3000.0	
	0	0		0.0	3000.0	
	0	0		0.0	3000.0	
	0	0		0.0	2625.0	
	0	0		0.0	0.0	
	0	0		0.0	2487.5	
	0	0		0.0	2762.5	
	0	0		0.0	2562.5	
	0	0	0	0.0	2675.0	36362.0
	0	0	RELOCATE MODULAR GLARE SCREEN SYSTEM FOOT	25.0	2562.5	RELOCATE TEMPORARY CONCRETE BARRIER FOOT
	0	0		0.0	1300.0	
	0	0		0.0	125.0	
	0	0		0.0	0.0	
	0	0		0.0	2237.5	
	0	0		0.0	2900.0	
	0	0		0.0	487.5	
	0	0	0	0.0	0.0	1512.5
	0	0	MODULAR GLARE SCREEN SYSTEM FOOT	0.0	0.0	TEMPORARY CONCRETE BARRIER FOOT
	0	0		137.5	0.0	
	0	0		450.0	0.0	
	0	0		362.5	0.0	
	0	0		537.5	0.0	
TOTALS	0	0	0	1512.5	33400.0	0.0

LOCATION			PAVEMENT MARKING TAPE, TY III LETTERS & SYMBOLS	PAVEMENT MARKING TAPE, TYPE III 4"	PAVEMENT MARKING TAPE, TYPE III 8"	PAVEMENT MARKING TAPE, TYPE III 12"	PAVEMENT MARKING TAPE, TYPE III 24"	WORK ZONE PAVEMENT MARKING REMOVAL	POLYUREA PAVEMENT MARKING TYPE II LINE 4"	POLYUREA PAVEMENT MARKING TYPE II LINE 8"	POLYUREA PAVEMENT MARKING TYPE II LINE 12"
ROAD	STATION FROM	STATION TO	SQ FT	FOOT	FOOT	FOOT	FOOT	SQ FT	FOOT	FOOT	FOOT
I-474	-	456+00.00	0	0	0	0	0	0	0	0	0
I-74	456+00.00	471+00.00	0	0	0	0	0	0	0	0	0
I-74	471+00.00	486+00.00	0	0	0	0	0	0	0	0	0
I-74	486+00.00	501+00.00	0	0	0	0	0	0	0	0	0
I-74	501+00.00	516+00.00	0	0	0	0	0	0	0	0	0
I-74	516+00.00	531+00.00	0	0	0	0	0	0	0	0	0
RAMP G/H	118+50.00	101+47.00	0	0	0	0	0	0	0	0	0
I-74	531+00.00	546+00.00	0	0	0	0	0	0	0	0	0
I-74	546+00.00	561+00.00	0	0	0	0	0	0	0	0	0
I-74	561+00.00	576+00.00	0	0	0	0	0	0	0	0	0
I-74	576+00.00	591+00.00	0	0	0	0	0	990	2702	0	0
I-74	591+00.00	606+00.00	0	347	0	0	0	288	1060	0	0
I-74	606+00.00	621+00.00	0	0	0	0	0	0	0	0	0
I-74	621+00.00	636+00.00	0	0	0	0	0	0	0	0	0
I-74	636+00.00	640+00.00	0	0	0	0	0	0	0	0	0
I-155	00+00.00	09+00.00	0	0	0	0	0	0	0	0	0
I-155	09+00.00	23+00.00	0	0	0	0	0	0	0	0	0
I-155	23+00.00	37+50.00	0	0	0	0	0	0	0	0	0
I-155	37+50.00	51+00.00	0	0	0	0	0	0	0	0	0
I-155	51+00.00	66+00.00	0	0	0	0	0	0	0	0	0
Morton Ave.	16+00.00	28+25.00	26	1772	387	0	26	1161	0	0	0
Morton Ave.	28+25.00	36+50.00	9	1378	314	0	23	784	0	0	0
Morton Ave.	36+50.00	44+75.00	0	2280	0	0	0	691	0	0	0
Morton Ave.	44+75.00	58+00.00	60	3433	0	0	0	266	0	0	0
		TOTALS	95	9209	700	0	48	4180	3762	0	0

	SHORT TERM PAVEMENT MARKING	CHANGEABLE MESSAGE SIGN
	FOOT	CAL MO
TOTAL STAGE 1B	686	3.25

ATTENUATOR LOCATION SCHEDULE				IMPACT ATTENUATORS WIDE NEW OR RELOCATED	IMPACT ATTENUATORS WIDE TO REMAIN	IMPACT ATTENUATORS NARROW NEW OR RELOCATED	IMPACT ATTENUATORS NARROW TO REMAIN
ROAD	STATION	OFFSET	TYPE	EACH	EACH	EACH	EACH
I-74	459+50.81	34.85	WIDE	1	0	0	0
I-74	605+25.29	-16.25	NARROW		0	1	0
I-155	12+45.23	24.68	NARROW		0	1	0
I-155	40+14.44	-29.63	WIDE	1	0	0	0
MORTON	41+65.32	-72.8	WIDE	1	0	0	0
MORTON	32+76.88	-21.01	WIDE	1	0	0	0
MORTON	50+01.10	-46.43	WIDE	1	0	0	0

	TEST LEVEL 2 ATTENUATORS NEW OR RELOCATED	TEST LEVEL 2 ATTENUATORS TO REMAIN	ATTENUATORS FROM PREVIOUS STAGE	IMPACT ATTENUATORS TEMPORARY (NON-REDRCTVE), TEST LVL 2	IMPACT ATTENUATORS, TEMPORARY (FULLY REDRCTVE, NARROW TEST LVL 2	IMPACT ATTENUATORS, RELOCATE (FULLY REDRCTVE, TEST LVL 2	IMPACT ATTENUATORS, RELOCATE (NON-REDRCTVE), TEST LVL 2
WIDE	3	0	0	3	-	-	0
NARROW	0	0	0	-	0	0	-

	TEST LEVEL 3 ATTENUATORS NEW OR RELOCATED	TEST LEVEL 3 ATTENUATORS TO REMAIN	ATTENUATORS FROM PREVIOUS STAGE	IMPACT ATTENUATORS TEMPORARY (NON-REDRCTVE), TEST LVL 3	IMPACT ATTENUATORS, TEMPORARY (FULLY REDRCTVE, NARROW TEST LVL 3	IMPACT ATTENUATORS, RELOCATE (FULLY REDRCTVE, TEST LVL 3	IMPACT ATTENUATORS, RELOCATE (NON-REDRCTVE), TEST LVL 3
WIDE	2	0	3	2	-	-	0
NARROW	2	0	2	-	2	0	-

STA	MAINLINE	DIRECTION	RT/LT	MUTCD CODE	DESCRIPTION	QTY
ADV	I-474	EB	RT	STD 701400-05	IDOT ADVANCED SIGNING STANDARD	1
ADV	I-474	EB	LT	W20-I105(O)-48	TRUCKS LEAVING HIGHWAY	1
ADV	I-474	EB	Both	W20-7(O)-48	FLAGGER SYMBOL	1
ADV	I-474	EB	Both	W16-3A(O)-3612	XX MILES	1
ADV	I-474	EB	Both	ARROW BOARD	ARROW BOARD	1
ADV	I-474	EB	Both	W21-I115(O)-3618	WORK ZONE	2
ADV	I-474	EB	Both	R2-1-3648	SPEED LIMIT XX	2
ADV	I-474	EB	Both	R2-I106-3618	$375 FINE MINIMUM	2
ADV	I-474	EB	Both	W20-I908(O)-9636	BE PREPARED TO STOP	2
ADV	I-474	EB	Both	W21-I113(O)-3612	BEGINS	2
ADV	I-474	EB	Both	STD 701400-05	IDOT ADVANCED SIGNING STANDARD	1
ADV	I-74	EB	Both	R2-1-3648	SPEED LIMIT XX	4
ADV	I-74	EB	Both	R2-I106-3618	$375 FINE MINIMUM	4
ADV	I-74	EB	Both	W1-4bR(O)-48	2 LANES SHIFT RIGHT (ARROWS)	2
ADV	I-74	EB	Both	W16-3A(O)-3612	XX MILES	4
ADV	I-74	EB	Both	W20-I103(O)-48	ROAD CONSTRUCTION AHEAD	2
ADV	I-74	EB	Both	W21-I113(O)-3612	BEGINS	4
ADV	I-74	EB	Both	W21-I115(O)-3618	WORK ZONE	4
ADV	I-74	EB	Both	Work Zone Info Sign	WORK ZONE INFORMATION	2
ADV	I-74	EB	Both	W4-1R(O)-48	MERGING TRAFFIC RIGHT SYMBOL	1
ADV	I-74	EB	Both	W3-2(O)-48	YIELD AHEAD (ARROW)	1
ADV	I-74	EB	Both	R1-2-48	YIELD	1
ADV	I-74	EB	Both	W1-4BR(O)-48	2 LANES SHIFT RIGHT (ARROWS)	2
ADV	I-74	EB	Both	W20-I105(O)-48	TRUCKS LEAVING HIGHWAY	1
ADV	I-74	WB	Both	W1-4bL(O)-48	2 LANES SHIFT LEFT (ARROWS)	2
ADV	I-74	WB	Both	W16-3A(O)-3612	XX MILES	6
ADV	I-74	WB	Both	W20-I103(O)-48	ROAD CONSTRUCTION AHEAD	2
ADV	I-74	WB	Both	R2-1-3648	SPEED LIMIT XX	2
ADV	I-74	WB	Both	R2-I106-3618	$375 FINE MINIMUM	2
ADV	I-74	WB	Both	W21-I113(O)-3612	BEGINS	2
ADV	I-74	WB	Both	W21-I115(O)-3618	WORK ZONE	2
ADV	I-74	WB	Both	Work Zone Info Sign	WORK ZONE INFORMATION	2
465+35	I-74	EB	Both	W1-4bR(O)-48	2 LANES SHIFT RIGHT (ARROWS)	2
469+05	I-74	WB	Both	W1-4L(O)-48	LANE SHIFT LEFT (ARROW)	2
477+00	I-74	WB	Both	ARROW BOARD	ARROW BOARD	1
477+00	I-74	WB	Both	W20-I908(O)-9636	BE PREPARED TO STOP	1
484+00	I-74	WB	LT	W20-7(O)-48	FLAGGER SYMBOL	1
484+00	I-74	WB	LT	W16-3A(O)-3612	XX MILES	1
490+00	I-74	WB	Both	W1-4bR(O)-48	2 LANES SHIFT RIGHT (ARROWS)	2
500+00	I-74	EB	Both	W1-4bL(O)-48	2 LANES SHIFT LEFT (ARROWS)	2
500+00	I-74	EB	Both	W1-4R(O)-48	LANE SHIFT RIGHT (ARROW)	1
500+00	I-74	EB	Both	W4-1R(O)-48	MERGING TRAFFIC RIGHT SYMBOL	1
507+50	I-74	EB	LT	W20-7(O)-48	FLAGGER SYMBOL	1
507+50	I-74	EB	LT	W16-3A(O)-3612	XX MILES	1
515+36	I-74	WB	RT	W1-4bL(O)-48	2 LANES SHIFT LEFT (ARROWS)	2
515+36	I-74	WB	RT	R1-2-48	YIELD	1
520+50	I-74	EB	RT	ARROW BOARD	ARROW BOARD	1
520+50	I-74	EB	RT	W20-I908(O)-9636	BE PREPARED TO STOP	1
522+75	I-74	WB	RT	W4-1R(O)-48	MERGING TRAFFIC RIGHT SYMBOL	1
530+00	I-74	WB	RT	W20-I900R-4836	CRASH INVESTIGATION SITE (ARROW RIGHT)	1
531+70	I-74	WB	RT	W20-I900R-4836	CRASH INVESTIGATION SITE (ARROW RIGHT)	1
532+50	I-74	WB	Both	W1-4bR(O)-48	2 LANES SHIFT RIGHT (ARROWS)	2
533+10	I-74	EB	Both	W5-2(O)-48	NARROW BRIDGE	2
538+00	I-74	EB	LT	W20-7(O)-48	FLAGGER SYMBOL	1
538+00	I-74	EB	Both	W1-4bR(O)-48	2 LANES SHIFT RIGHT (ARROWS)	2
538+50	I-74	WB	LT	W20-I105(O)-48	TRUCKS LEAVING HIGHWAY	1
545+50	I-74	EB	LT	W20-I105(O)-48	TRUCKS LEAVING HIGHWAY	1

STA	MAINLINE	DIRECTION	RT/LT	MUTCD CODE	DESCRIPTION	QTY
546+00	I-74	WB	Both	W5-2(O)-48	NARROW BRIDGE	2
549+30	I-74	EB	Both	W1-4bR(O)-48	2 LANES SHIFT RIGHT (ARROWS)	2
554+00	I-74	WB	Both	W5-2(O)-48	NARROW BRIDGE	2
552+00	I-74	WB	LT	W20-I105(O)-48	TRUCKS LEAVING HIGHWAY	1
555+10	I-74	EB	RT	R1-2-48	YIELD	1
556+25	I-74	EB	LT	W20-7(O)-48	FLAGGER SYMBOL	1
556+25	I-74	EB	LT	W16-3A(O)-3612	XX MILES	1
560+00	I-74	EB	Both	W24-1AL(O)-48	DOUBLE REVERSE CURVE LEFT (ARROWS)	2
561+00	I-74	WB	Both	W1-4bL(O)-48	2 LANES SHIFT LEFT (ARROWS)	2
561+09	I-74	EB	Both	W5-2(O)-48	NARROW BRIDGE	2
572+40	I-74	WB	LT	W20-I105(O)-48	TRUCKS LEAVING HIGHWAY	1
573+00	I-74	WB	Both	W5-2(O)-48	NARROW BRIDGE	2
577+00	I-74	WB	Both	W24-1AL(O)-48	DOUBLE REVERSE CURVE LEFT (ARROWS)	2
578+00	I-74	EB	RT	W20-I105(O)-48	TRUCKS LEAVING HIGHWAY	1
579+17	I-74	WB	RT	R1-2-48	YIELD	1
583+00	I-74	WB	RT	ARROW BOARD	ARROW BOARD	1
583+00	I-74	WB	RT	W20-I908(O)-9636	BE PREPARED TO STOP	1
589+35	I-74	EB	RT	W20-7(O)-48	FLAGGER SYMBOL	1
589+35	I-74	EB	RT	W16-3A(O)-3612	XX MILES	1
598+25	I-74	WB	Both	W1-4bR(O)-48	2 LANES SHIFT RIGHT (ARROWS)	2
599+50	I-74	EB	LT	ARROW BOARD	ARROW BOARD	1
599+50	I-74	EB	LT	W20-I908(O)-9636	BE PREPARED TO STOP	1
605+00	I-74	EB	Both	W1-4bL(O)-48	2 LANES SHIFT LEFT (ARROWS)	2
612+00	I-74	EB	RT	W20-I105(O)-48	TRUCKS LEAVING HIGHWAY	1
613+90	I-74	EB	Both	W1-4bL(O)-48	2 LANES SHIFT LEFT (ARROWS)	2
617+00	I-74	WB	Both	W1-4bR(O)-48	2 LANES SHIFT RIGHT (ARROWS)	2
618+50	I-74	EB	RT	R1-2-48	YIELD	1
625+00	I-74	EB	Both	G20-I103(O)-3660	END WORKZONE SPEED LIMIT	2
210+65	Ex Ramp E	EB	Both	W3-2(O)-48	YIELD AHEAD (ARROW)	2
340+85	EX Ramp F	EB	LF	W4-3L(O)-48	ADDED LANE RIGHT SYMBOL	1
112+00	Ramp H	WB	Both	W3-2(O)-48	YIELD AHEAD (ARROW)	2
117+00	Ramp H	WB	Both	W3-2(O)-48	YIELD AHEAD (ARROW)	2
409+00	Ramp D	EB	Both	W3-2(O)-48	YIELD AHEAD (ARROW)	2
318+00	Ramp C	NB	Both	W3-2(O)-36	YIELD AHEAD (ARROW)	2
318+00	Ramp C	NB	Both	W21-1A(O)-48	WORKERS SYMBOL	2
216+00	Ramp B	-	Both	W20-I103(O)-36	ROAD CONSTRUCTION AHEAD	2
221+00	Ramp B	-	Both	W21-1A(O)-36	WORKERS SYMBOL	2
ADV	I-155	NB	Both	R2-1-3648	SPEED LIMIT XX	2
ADV	I-155	NB	Both	R2-I106-3618	$375 FINE MINIMUM	2
ADV	I-155	NB	Both	W20-I103(O)-48	ROAD CONSTRUCTION AHEAD	2
ADV	I-155	NB	Both	W21-I113(O)-3612	BEGINS	2
ADV	I-155	NB	Both	W21-I115(O)-3618	WORK ZONE	2
ADV	I-155	NB	Both	Work Zone Info Sign	WORK ZONE INFORMATION	2
ADV	I-155	NB	Both	W1-4bR(O)-48	2 LANES SHIFT RIGHT (ARROWS)	4
ADV	I-155	NB	Both	W16-3A(O)-3612	XX MILES	6
5+00	I-155	NB	RT	W20-I105(O)-48	TRUCKS LEAVING HIGHWAY	1
17+00	I-155	NB	RT	ARROW BOARD	ARROW BOARD	1
17+00	I-155	NB	RT	W20-I908(O)-9636	BE PREPARED TO STOP	1
22+00	I-155	NB	RT	W20-7(O)-48	FLAGGER SYMBOL	1
22+00	I-155	NB	RT	W16-3A(O)-3612	XX MILES	1
29+00	I-155	SB	RT	W20-7(O)-48	FLAGGER SYMBOL	1
29+00	I-155	SB	RT	W16-3A(O)-3612	XX MILES	1
32+75	I-155	SB	Both	W1-4bL(O)-48	2 LANES SHIFT LEFT (ARROWS)	2
34+00	I-155	SB	RT	ARROW BOARD	ARROW BOARD	1

TEMPORARY SIGN SCHEDULE

(INCLUDED IN TRAFFIC CONTROL AND PROTECTION (SPECIAL))

STA	MAINLINE	DIRECTION	RT/LT	MUTCD CODE	DESCRIPTION	QTY
45+00	I-155	SB	Both	G20-I103(O)-3660	END WORKZONE SPEED LIMIT	2
45+00	I-155	NB	LT	W20-I105(O)-48	TRUCKS LEAVING HIGHWAY	1
49+50	I-155	NB	Both	W1-4bR(O)-48	2 LANES SHIFT RIGHT (ARROWS)	2
ADV	I-155 On Ramp	NB	Both	W20-I103(O)-48	ROAD CONSTRUCTION AHEAD	2
40+00	I-155 On Ramp	NB	RT	R1-2-48	YIELD	1
43+00	I-155 On Ramp	NB	RT	R2-1-3648	SPEED LIMIT XX	1
43+00	I-155 On Ramp	NB	RT	R2-I106-3618	$375 FINE MINIMUM	1
43+00	I-155 On Ramp	NB	RT	W21-I113(O)-3612	BEGINS	1
43+00	I-155 On Ramp	NB	RT	W21-I115(O)-3618	WORK ZONE	1
46+00	I-155 On Ramp	NB	Both	W3-2(O)-48	YIELD AHEAD (ARROW)	2
14+15	Morton	NB	RT	R2-1-3648	SPEED LIMIT XX	2
14+15	Morton	NB	RT	R2-I106-3618	$375 FINE MINIMUM	2
14+15	Morton	NB	RT	W20-I103(O)-36	ROAD CONSTRUCTION AHEAD	1
14+70	Morton	NB	–	W16-5pR(O)-2418	SUPPLEMENTAL ARROW RIGHT	1
14+70	Morton	NB	–	W20-I103(O)-36	ROAD CONSTRUCTION AHEAD	1
15+20	Morton	SB	–	W16-5pL(O)-2418	SUPPLEMENTAL ARROW LEFT	1
15+20	Morton	SB	–	W20-I103(O)-36	ROAD CONSTRUCTION AHEAD	1
17+56	Morton	NB	–	W16-5pR(O)-2418	SUPPLEMENTAL ARROW RIGHT	1
17+56	Morton	NB	–	W20-I103(O)-36	ROAD CONSTRUCTION AHEAD	1
18+35	Morton	NB	RT	W21-1A(O)-36	WORKERS SYMBOL	1
20+10	Morton	SB	–	W16-5pL(O)-2418	SUPPLEMENTAL ARROW LEFT	1
20+10	Morton	SB	–	W20-I103(O)-36	ROAD CONSTRUCTION AHEAD	1
20+70	Morton	NB	–	W16-5pR(O)-2418	SUPPLEMENTAL ARROW RIGHT	1
20+70	Morton	NB	–	W20-I103(O)-36	ROAD CONSTRUCTION AHEAD	1
23+52	Morton	NB	–	W16-5pR(O)-2418	SUPPLEMENTAL ARROW RIGHT	1
23+52	Morton	NB	–	W20-I103(O)-36	ROAD CONSTRUCTION AHEAD	1
25+80	Morton	NB	Center	R3-2-36	NO LEFT TURN (ARROW)	1
26+15	Morton	SB	RT	R3-2-36	NO LEFT TURN (ARROW)	1
26+76	Morton	NB	–	W20-I103(O)-36	ROAD CONSTRUCTION AHEAD	1
31+05	Morton	SB	RT	R3-2-36	NO LEFT TURN (ARROW)	1
31+05	Morton	SB	RT	R10-11-3648	NO TURN ON RED	1
36+00	Morton	SB	RT	W4-1R(O)-36	MERGING TRAFFIC RIGHT SYMBOL	1
49+89	Morton	–	–	W16-5pR(O)-2418	SUPPLEMENTAL ARROW RIGHT	1
49+89	Morton	–	–	W20-I103(O)-36	ROAD CONSTRUCTION AHEAD	1
16+35	Morton	NB	RT	W1-4bR(O)-36	2 LANES SHIFT RIGHT (ARROWS)	1
23+03	Morton	SB	–	W16-5pL(O)-2418	SUPPLEMENTAL ARROW LEFT	1
23+03	Morton	SB	–	W20-I103(O)-36	ROAD CONSTRUCTION AHEAD	1
24+80	Morton	NB	RT	W1-4bR(O)-36	2 LANES SHIFT RIGHT (ARROWS)	1

STA	MAINLINE	DIRECTION	RT/LT	MUTCD CODE	DESCRIPTION	QTY
26+00	Morton	NB	RT	M6-1R(O)-2115	#N/A	1
31+00	Morton	NB	RT	W1-4bL(O)-36	2 LANES SHIFT LEFT (ARROWS)	1
39+50	Morton	NB	RT	W20-I900R-4836	CRASH INVESTIGATION SITE (ARROW RIGHT)	1
40+50	Morton	NB	RT	W1-4bL(O)-36	2 LANES SHIFT LEFT (ARROWS)	1
48+35	Morton	SB	RT	W21-1A(O)-36	WORKERS SYMBOL	1
49+50	Morton	–	–	W21-1A(O)-36	WORKERS SYMBOL	1
51+25	Morton	–	–	W16-5pL(O)-2418	SUPPLEMENTAL ARROW LEFT	1
51+25	Morton	–	–	W20-I103(O)-36	ROAD CONSTRUCTION AHEAD	1
51+35	Morton	SB	RT	W1-4bL(O)-36	2 LANES SHIFT LEFT (ARROWS)	1
53+00	Morton	SB	RT	W20-I103(O)-36	ROAD CONSTRUCTION AHEAD	1
508+00	Morton Ramp E	WB	Both	W3-2(O)-48	YIELD AHEAD (ARROW)	2
503+00	Morton Ramp E	WB	Both	W20-I103(O)-48	ROAD CONSTRUCTION AHEAD	2
*	DETROIT	NB	RT	W20-I103(O)-48	ROAD CONSTRUCTION AHEAD	1
*	DETROIT	SB	RT	M4-8(O)-3015	#N/A	2
*	DETROIT	SB	RT	W16-5pR(O)-2418	SUPPLEMENTAL ARROW RIGHT	2
*	DETROIT	SB	RT	W20-2(O)-48	DETOUR AHEAD	1
*	DETROIT	SB	RT	W20-3(O)-36	ROAD CLOSED AHEAD	1
*	JACKSON	NB	RT	M4-8A(O)-2418	#N/A	1
*	JACKSON	SB	RT	M4-8(O)-3015	#N/A	2
*	JACKSON	SB	RT	M4-9L(O)-3024	#N/A	1
*	JACKSON	SB	RT	M4-9R(O)-3024	#N/A	1
*	JACKSON	SB	RT	W16-5pR(O)-2418	SUPPLEMENTAL ARROW RIGHT	1
*	JEFFERSON	NB	RT	M4-8(O)-3015	#N/A	2
*	JEFFERSON	NB	RT	M4-9R(O)-3024	#N/A	1
*	JEFFERSON	NB	RT	M4-10R(O)-4818	#N/A	1
*	JEFFERSON	NB	RT	W16-5pR(O)-2418	SUPPLEMENTAL ARROW RIGHT	1
*	JEFFERSON	SB	RT	M4-8(O)-3015	#N/A	1
*	JEFFERSON	SB	RT	M4-8A(O)-2418	#N/A	1
*	JEFFERSON	SB	RT	M4-9R(O)-3024	#N/A	1
*	JEFFERSON	SB	RT	M4-10L(O)-4818	#N/A	1
*	JEFFERSON	SB	RT	R11-2(O)-4830	ROAD CLOSED	1
*	JEFFERSON	SB	RT	R11-4(O)-6030	ROAD CLOSED TO THRU TRAFFIC	1
*	VETERANS	NB	RT	M4-8(O)-3015	#N/A	1
*	VETERANS	NB	RT	M4-9L(O)-3024	#N/A	1
*	VETERANS	NB	RT	W16-5pR(O)-2418	SUPPLEMENTAL ARROW RIGHT	1
*	VETERANS	NB	RT	W20-2(O)-48	DETOUR AHEAD	1
*	VETERANS	NB	RT	W20-3(O)-36	ROAD CLOSED AHEAD	1
*	VETERANS	SB	RT	M4-8(O)-3015	#N/A	1
*	VETERANS	SB	RT	M4-9R(O)-3024	#N/A	2
*	VETERANS	SB	RT	W16-5pR(O)-2418	SUPPLEMENTAL ARROW RIGHT	1

NOTE:
- SEE JEFFERSON DETOUR PLAN FOR PLACEMENT

TEMPORARY SIGN SCHEDULE
(INCLUDED IN TRAFFIC CONTROL AND PROTECTION (SPECIAL))

SIGN INDEX #	SIGN CODE	STA	OFFSET	DTL SHT #	ALIGNMENT	DIRECTION	EX OVRHD STR	EX STANDARD	EX SPECIAL	TEMP STD	TEMP SPCL	PROPOSED	DESCRIPTION	NEW STA.	NEW OFFSET	REMOVE SIGN PANEL ASSEMBLY TYPE B	REMOVE SIGN PANEL – TYPE 3	REMOVE GROUND MOUNTED SIGN SUPPORT	REMOVE CONCRETE FOUNDATIONS – GROUND MOUNT"	REMOVE CONCRETE FOUNDATIONS – OVERHEAD	REMOVE SIGN OVERHEAD STRUCTURE – SPAN	TEMPORARY SIGN PANEL ASSEMBLY	TEMPORARY SIGN PANEL OVERLAY	CONSTRUCT PROPOSED SIGN (SEE SIGN PLAN)
																EACH	SQ FT	EACH	EACH	EACH	EACH	SQ FT	SQ FT	
21.03	W4-1L	13+16.00	65.88	–	I-155	SB		X					MERGE			1.00								
21.12	W13-3	13+19.00	-82.04	–	I-155	NB		X					40 MPH RAMP										REMOVE	
1T.01-L		–	–	263	I-474	EB					X		CAUTION REDUCE SPEED FOR MERGER	ADV								10		
1T.01-R		–	–	263	I-474	EB					X		CAUTION REDUCE SPEED FOR MERGER	ADV								10		
6.08	R2-I104A	505+06.00	-82.59	–	I-74	WB			X				TRUCKS OVER 1 TON 55 MPH					2	2					
7.02	W4-3R	522+14.00	-57.84	–	I-74	WB		X					TWO WAY TRAFFIC			1.00								
12.03	E5-1A	582+00.00	42.40	–	I-74	EB		X					EXIT 102 A	583+55.09	59.00							RELOCATE		
12.07	D1-I016	588+23.55	76.36	–	I-74	EB			X				EXIT 102B SIGN I-74 E	589+56.38	76.35			2	2			RELOCATE		
14.01	W4-1R	606+43.19	70.86	–	I-74	EB		X					MERGE										REMOVE	
11.05S		575+50.00		–	I-74	EB	X						OVERHEAD SIGN STRUCTURE							2	1			
11.05V-1	D9-I105	575+50.00	OH	–	I-74	EB			X				NORTHBOUND MORTON AVE EXIT 102B				REMOVE							
11.05V-2	D9-I105	575+50.00	OH	–	I-74	EB			X				SOUTHBOUND MORTON AVE EXIT 102A				REMOVE							
11T.05-1		–	–	269	I-74	EB					X		EXIT 102B NORTHBOUND MORTON AVE 1	574+70.00	89.00							68		
11T.05-2		–	–	269	I-74	EB					X		EXIT 102A SB MORTON AVE (UP/RIGHT	574+70.00	89.00							74		
1T.02-L		–	–	263	I-74	EB					X		THRU TRAFFIC KEEP LEFT	ADV								8		
1T.02-R		–	–	263	I-74	EB					X		THRU TRAFFIC KEEP LEFT	ADV								8		
4.03-1	R3-4	476+17.00	-0+01.55	–	I-74	EB		X					NO U-TURN IN MEDIAN OF I-74			0.50								
4.03-2	R3-I101	476+17.00	-1.55	–	I-74	EB			X				EXCEPT AUTHORIZED VEHICLES			0.50								
4.04-1	R3-4	476+17.00	-1.55	–	I-74	WB		X					NO U-TURN IN MEDIAN OF I-74			0.50								
4.04-2	R3-I101	476+17.00	-1.55	–	I-74	WB			X				EXCEPT AUTHORIZED VEHICLES			0.50								
6.01S		515+61.00		–	I-74	EB	X						OVERHEAD SIGN STRUCTURE							2	1			
6.01V-1	D1-I104a	515+61.00	OH	–	I-74	EB			X				I-74 EAST, INDIANAPOLIS				REMOVE							
6.01V-2	D9-I105	515+61.00	OH	–	I-74	EB			X				EXIT 101 SUPPL.				REMOVE							
6.01V-3	D1-I104b	515+61.00	OH	–	I-74	EB			X				I-155 SOUTH, LINCOLN				REMOVE							
6.04S		508+00.00		–	I-74	WB	X						OVERHEAD SIGN STRUCTURE							2	1			
6.04V	D1-I1088	508+00.00	OH	–	I-74	WB			X				474 WEST MOL R ISLAND PEK. 1 MI, I-74 W PEORIA				REMOVE							
6T.01		–	–	266	I-74	EB					X		I-74 AHEAD EXIT I-155 SOUTH LINCOLN	503+00.00	81							175		
6T.02		–	–	267	I-74	WB					X		I-474 WEST KEEP LEFT	505+05.00	-82.5							121		
6T.04		–	–	268	I-74	WB					X		I-74 WEST KEEP RIGHT	508+30.00	-82.50							51		
18.06	D1-I048	33+00.00	-59.76	–	MORTON	SB			X				MORT AVE ARROW AHEAD, I-74 E LEFT BLOOM.					2	2					
18.08S		34+48.00		–	MORTON	SB/NB	X						OVERHEAD SIGN STRUCTURE							2	1			
18.08V-1	D1-I035b	34+48.00	OH	–	MORTON	NB			X				I-74 EAST BLOOMINGTON				REMOVE							
18.08V-2	D1-I035c	34+48.00	OH	–	MORTON	NB			X				MORTON AVE (AHEAD)				REMOVE							
18.08V-3	D1-I035a	34+48.00	OH	–	MORTON	NB			X				I-74 WEST PEORIA NEXT RIGHT				REMOVE							
PR18.08		–	–	–	MORTON	SB						X	I-74 EAST BLOOMINGTON	PR	PR									X
19.02	W13-3	504+29.46	-21.32	–	MORTON RAMP E	–		X					30 MPH RAMP			1.00								
						TOTALS									TOTALS	5	0	6	6	8	4	524	0	

TEMPORARY SIGN SCHEDULE

FILE NAME =	DESIGNED - HTL	REVISED -	
D468620-sht-sign03-01.dgn	DRAWN - KV	REVISED -	
USER NAME = TERRA	CHECKED - DA/LVA	REVISED -	
PLOT DATE = 7/18/2012	DATE - 7/20/2012	REVISED -	

TERRA ENGINEERING LTD.

STATE OF ILLINOIS
DEPARTMENT OF TRANSPORTATION

MAINTENANCE OF TRAFFIC
STAGE 1 SIGN SCHEDULE

SCALE: | SHEET NO. 16 OF 85 SHEETS | STA. | TO STA.

F.A.I. RTE.	SECTION	COUNTY	TOTAL SHEETS	SHEET NO.
•	90-(14R;(14HB-4,14,14HVB)BR)	TAZEWELL	2433	92

CONTRACT NO. 68620

ILLINOIS FED. AID PROJECT

• 74 & 155

STA	MAINLINE	DIRECTION	RT/LT	MUTCD CODE	DESCRIPTION	QTY
ADV	I-474	EB	LT	W20-I105(O)-48	TRUCKS LEAVING HIGHWAY	1
ADV	I-474	EB	Both	W20-7(O)-48	FLAGGER SYMBOL	1
ADV	I-474	EB	Both	W16-3A(O)-3612	XX MILES	1
ADV	I-474	EB	Both	ARROW BOARD	ARROW BOARD	1
ADV	I-474	EB	Both	W21-I115(O)-3618	WORK ZONE	2
ADV	I-474	EB	Both	R2-1-3648	SPEED LIMIT XX	2
ADV	I-474	EB	Both	R2-I106-3618	$375 FINE MINIMUM	2
ADV	I-474	EB	Both	W20-I908(O)-9636	BE PREPARED TO STOP	2
ADV	I-474	EB	Both	W21-I113(O)-3612	BEGINS	2
ADV	I-474	EB	Both	STD 701400-05	IDOT ADVANCED SIGNING STANDARD	1
ADV	I-74	EB	Both	R2-1-3648	SPEED LIMIT XX	4
ADV	I-74	EB	Both	R2-I106-3618	$375 FINE MINIMUM	4
ADV	I-74	EB	Both	W1-4bR(O)-48	2 LANES SHIFT RIGHT (ARROWS)	2
ADV	I-74	EB	Both	W16-3A(O)-3612	XX MILES	4
ADV	I-74	EB	Both	W20-I103(O)-48	ROAD CONSTRUCTION AHEAD	2
ADV	I-74	EB	Both	W21-I113(O)-3612	BEGINS	4
ADV	I-74	EB	Both	W21-I115(O)-3618	WORK ZONE	4
ADV	I-74	EB	Both	Work Zone Info Sign	WORK ZONE INFORMATION	2
ADV	I-74	EB	Both	W4-1R(O)-48	MERGING TRAFFIC RIGHT SYMBOL	1
ADV	I-74	EB	Both	W3-2(O)-48	YIELD AHEAD (ARROW)	1
ADV	I-74	EB	Both	R1-2-48	YIELD	1
ADV	I-74	EB	Both	W1-4BR(O)-48	2 LANES SHIFT RIGHT (ARROWS)	2
ADV	I-74	EB	Both	W20-I105(O)-48	TRUCKS LEAVING HIGHWAY	1
ADV	I-74	WB	Both	W1-4bL(O)-48	2 LANES SHIFT LEFT (ARROWS)	2
ADV	I-74	WB	Both	W16-3A(O)-3612	XX MILES	6
ADV	I-74	WB	Both	W20-I103(O)-48	ROAD CONSTRUCTION AHEAD	2
ADV	I-74	WB	Both	R2-1-3648	SPEED LIMIT XX	2
ADV	I-74	WB	Both	R2-I106-3618	$375 FINE MINIMUM	2
ADV	I-74	WB	Both	W21-I113(O)-3612	BEGINS	2
ADV	I-74	WB	Both	W21-I115(O)-3618	WORK ZONE	2
ADV	I-74	WB	Both	Work Zone Info Sign	WORK ZONE INFORMATION	2
465+35	I-74	EB	Both	W1-4bR(O)-48	2 LANES SHIFT RIGHT (ARROWS)	2
469+05	I-74	WB	Both	W1-4L(O)-48	LANE SHIFT LEFT (ARROW)	2
477+00	I-74	WB	Both	ARROW BOARD	ARROW BOARD	1
477+00	I-74	WB	Both	W20-I908(O)-9636	BE PREPARED TO STOP	1
484+00	I-74	WB	LT	W20-7(O)-48	FLAGGER SYMBOL	1
484+00	I-74	WB	LT	W16-3A(O)-3612	XX MILES	1
490+00	I-74	WB	Both	W1-4bR(O)-48	2 LANES SHIFT RIGHT (ARROWS)	2
500+00	I-74	EB	Both	W1-4bL(O)-48	2 LANES SHIFT LEFT (ARROWS)	2
500+00	I-74	EB	Both	W1-4R(O)-48	LANE SHIFT RIGHT (ARROW)	1
500+00	I-74	EB	Both	W4-1R(O)-48	MERGING TRAFFIC RIGHT SYMBOL	1
507+50	I-74	EB	LT	W20-7(O)-48	FLAGGER SYMBOL	1
507+50	I-74	EB	LT	W16-3A(O)-3612	XX MILES	1
515+36	I-74	WB	RT	W1-4bL(O)-48	2 LANES SHIFT LEFT (ARROWS)	2
515+36	I-74	WB	RT	R1-2-48	YIELD	1
520+50	I-74	EB	RT	ARROW BOARD	ARROW BOARD	1
520+50	I-74	EB	RT	W20-I908(O)-9636	BE PREPARED TO STOP	1
522+75	I-74	WB	RT	W4-1R(O)-48	MERGING TRAFFIC RIGHT SYMBOL	1
530+00	I-74	WB	RT	W20-I900R-4836	CRASH INVESTIGATION SITE (ARROW RIGHT)	1
531+70	I-74	WB	RT	W20-I900R-4836	CRASH INVESTIGATION SITE (ARROW RIGHT)	1
532+50	I-74	WB	Both	W1-4bR(O)-48	2 LANES SHIFT RIGHT (ARROWS)	2
533+10	I-74	EB	Both	W5-2(O)-48	NARROW BRIDGE	2
538+00	I-74	EB	LT	W20-7(O)-48	FLAGGER SYMBOL	1
538+00	I-74	EB	Both	W1-4bR(O)-48	2 LANES SHIFT RIGHT (ARROWS)	2
538+50	I-74	WB	LT	W20-I105(O)-48	TRUCKS LEAVING HIGHWAY	1
545+50	I-74	EB	LT	W20-I105(O)-48	TRUCKS LEAVING HIGHWAY	1

STA	MAINLINE	DIRECTION	RT/LT	MUTCD CODE	DESCRIPTION	QTY
546+00	I-74	WB	Both	W5-2(O)-48	NARROW BRIDGE	2
549+30	I-74	EB	Both	W1-4bR(O)-48	2 LANES SHIFT RIGHT (ARROWS)	2
554+00	I-74	WB	Both	W5-2(O)-48	NARROW BRIDGE	2
552+00	I-74	WB	LT	W20-I105(O)-48	TRUCKS LEAVING HIGHWAY	1
555+10	I-74	EB	RT	R1-2-48	YIELD	1
556+25	I-74	EB	LT	W20-7(O)-48	FLAGGER SYMBOL	1
556+25	I-74	EB	LT	W16-3A(O)-3612	XX MILES	1
560+00	I-74	EB	Both	W24-1AL(O)-48	DOUBLE REVERSE CURVE LEFT (ARROWS)	2
561+00	I-74	WB	Both	W1-4bL(O)-48	2 LANES SHIFT LEFT (ARROWS)	2
561+09	I-74	EB	Both	W5-2(O)-48	NARROW BRIDGE	2
572+40	I-74	WB	LT	W20-I105(O)-48	TRUCKS LEAVING HIGHWAY	1
573+00	I-74	WB	Both	W5-2(O)-48	NARROW BRIDGE	2
577+00	I-74	WB	Both	W24-1AL(O)-48	DOUBLE REVERSE CURVE LEFT (ARROWS)	2
579+17	I-74	WB	RT	R1-2-48	YIELD	1
598+25	I-74	WB	Both	W1-4bR(O)-48	2 LANES SHIFT RIGHT (ARROWS)	2
599+00	I-74	EB	RT	W20-I900R-4836	CRASH INVESTIGATION SITE (ARROW RIGHT)	1
605+00	I-74	EB	Both	W1-4bL(O)-48	2 LANES SHIFT LEFT (ARROWS)	2
613+90	I-74	EB	Both	W1-4bL(O)-48	2 LANES SHIFT LEFT (ARROWS)	2
617+00	I-74	WB	Both	W1-4bR(O)-48	2 LANES SHIFT RIGHT (ARROWS)	2
618+50	I-74	EB	RT	R1-2-48	YIELD	1
625+00	I-74	EB	Both	G20-I103(O)-3660	END WORKZONE SPEED LIMIT	3
217+00	Ramp B	-	Both	W20-I103(O)-48	ROAD CONSTRUCTION AHEAD	2
221+00	Ramp B	-	Both	W21-1A(O)-36	WORKERS SYMBOL	2
318+00	Ramp C	NB	Both	W3-2(O)-48	YIELD AHEAD (ARROW)	2
409+00	Ramp D	EB	Both	W3-2(O)-48	YIELD AHEAD (ARROW)	2
210+65	Ex. Ramp E	EB	Both	W3-2(O)-48	YIELD AHEAD (ARROW)	2
503+00	Morton Ramp E	WB	Both	W20-I103(O)-48	ROAD CONSTRUCTION AHEAD	2
508+00	Morton Ramp E	WB	Both	W3-2(O)-48	YIELD AHEAD (ARROW)	2
117+00	Ramp H	WB	Both	W3-2(O)-48	YIELD AHEAD (ARROW)	2
112+00	Ramp H	WB	Both	W3-2(O)-48	YIELD AHEAD (ARROW)	2
ADV	I-155	NB	Both	R2-1-3648	SPEED LIMIT XX	2
ADV	I-155	NB	Both	R2-I106-3618	$375 FINE MINIMUM	2
ADV	I-155	NB	Both	W20-I103(O)-48	ROAD CONSTRUCTION AHEAD	2
ADV	I-155	NB	Both	W21-I113(O)-3612	BEGINS	2
ADV	I-155	NB	Both	W21-I115(O)-3618	WORK ZONE	2
ADV	I-155	NB	Both	Work Zone Info Sign	WORK ZONE INFORMATION	2
ADV	I-155	NB	Both	W1-4bR(O)-48	2 LANES SHIFT RIGHT (ARROWS)	4
ADV	I-155	NB	Both	W16-3A(O)-3612	XX MILES	6
15+35	I-155	SB	RT	R2-1-3648	SPEED LIMIT XX	2
15+35	I-155	SB	RT	R2-I106-3618	$375 FINE MINIMUM	2
15+35	I-155	SB	RT	W1-4bR(O)-48	2 LANES SHIFT RIGHT (ARROWS)	4
15+35	I-155	SB	RT	W16-3A(O)-3612	XX MILES	6
15+35	I-155	SB	RT	W20-I103(O)-48	ROAD CONSTRUCTION AHEAD	2
15+35	I-155	SB	RT	W21-I113(O)-3612	BEGINS	2
15+35	I-155	SB	RT	W21-I115(O)-3618	WORK ZONE	2
32+75	I-155	SB	Both	W4-3L(O)-48	ADDED LANE RIGHT SYMBOL	1
49+50	I-155	NB	Both	W1-4bL(O)-48	2 LANES SHIFT LEFT (ARROWS)	2
70+50	I-155	NB	Both	W1-4bR(O)-48	2 LANES SHIFT RIGHT (ARROWS)	2
78+00	I-155	NB	Both	W1-4bR(O)-48	2 LANES SHIFT RIGHT (ARROWS)	2
78+00	I-155	NB	Both	W16-3A(O)-3612	XX MILES	2
ADV	I-155 On Ramp	NB	Both	W20-I103(O)-48	ROAD CONSTRUCTION AHEAD	2
14+15	Morton	NB	RT	W20-I103(O)-36	ROAD CONSTRUCTION AHEAD	1
14+70	Morton	NB	RT	W20-I103(O)-36	ROAD CONSTRUCTION AHEAD	1
14+70	Morton	NB	-	W16-5pR(O)-2418	SUPPLEMENTAL ARROW RIGHT	1
15+20	Morton	SB	-	M6-1R(O)-2115	#N/A	1
15+20	Morton	SB	-	W20-I103(O)-36	ROAD CONSTRUCTION AHEAD	1
15+20	Morton	SB	-	W16-5pL(O)-2418	SUPPLEMENTAL ARROW LEFT	1
16+35	Morton	NB	RT	W1-4bR(O)-36	2 LANES SHIFT RIGHT (ARROWS)	1
17+56	Morton	NB	-	W1-4bR(O)-36	2 LANES SHIFT RIGHT (ARROWS)	1

TEMPORARY SIGN SCHEDULE (INCLUDED IN TRAFFIC CONTROL AND PROTECTION (SPECIAL))

STA	MAINLINE	DIRECTION	RT/LT	MUTCD CODE	DESCRIPTION	QTY
17+56	Morton	NB	–	W16–5pR(O)–2418	SUPPLEMENTAL ARROW RIGHT	1
18+35	Morton	NB	RT	W21–1A(O)–36	WORKERS SYMBOL	1
20+10	Morton	SB	–	W16–5pL(O)–2418	SUPPLEMENTAL ARROW LEFT	1
20+70	Morton	NB	–	W16–5pR(O)–2418	SUPPLEMENTAL ARROW RIGHT	1
20+70	Morton	NB	–	W20–I103(O)–36	ROAD CONSTRUCTION AHEAD	1
23+03	Morton	SB	–	W16–5pL(O)–2418	SUPPLEMENTAL ARROW LEFT	1
23+03	Morton	SB	–	W20–I103(O)–36	ROAD CONSTRUCTION AHEAD	1
23+52	Morton	NB	–	W16–5pR(O)–2418	SUPPLEMENTAL ARROW RIGHT	1
23+52	Morton	NB	–	W20–I103(O)–36	ROAD CONSTRUCTION AHEAD	1
23+69	Morton	NB	RT	W1–4bR(O)–36	2 LANES SHIFT RIGHT (ARROWS)	1
24+80	Morton	NB	RT	R3–2–36	NO LEFT TURN (ARROW)	1
26+15	Morton	SB	RT	R3–2–36	NO LEFT TURN (ARROW)	1
26+76	Morton	NB	–	W20–I103(O)–36	ROAD CONSTRUCTION AHEAD	1
31+00	Morton	NB	RT	W1–4bL(O)–36	2 LANES SHIFT LEFT (ARROWS)	1
39+50	Morton	NB	RT	W20–I103(O)–36	ROAD CONSTRUCTION AHEAD	1
39+50	Morton	NB	RT	W20–I900R–4836	CRASH INVESTIGATION SITE (ARROW RIGHT)	1
43+00	Morton	NB	RT	W24–1AR(O)–48	DOUBLE REVERSE CURVE RIGHT (ARROWS)	1
49+89	Morton	–	–	W16–5pR(O)–2418	SUPPLEMENTAL ARROW RIGHT	1
49+89	Morton	–	–	W20–I103(O)–36	ROAD CONSTRUCTION AHEAD	1
51+26	Morton	–	–	W16–5pL(O)–2418	SUPPLEMENTAL ARROW LEFT	1
51+26	Morton	–	–	W20–I103(O)–36	ROAD CONSTRUCTION AHEAD	1
52+35	Morton	–	–	W20–I103(O)–36	ROAD CONSTRUCTION AHEAD	
55+20	Morton	SB	RT	W1–4bL(O)–36	2 LANES SHIFT LEFT (ARROWS)	1
*	DETROIT	NB	RT	W20–I103(O)–36	ROAD CONSTRUCTION AHEAD	1
*	DETROIT	SB	RT	M4–8(O)–3015	#N/A	2
*	DETROIT	SB	RT	W16–5pL(O)–2418	SUPPLEMENTAL ARROW LEFT	2
*	DETROIT	SB	RT	W16–7pL(O)–2412	DOWNWARD DIAGONAL ARROW LEFT	1
*	DETROIT	SB	RT	W20–2(O)–48	DETOUR AHEAD	1
*	JACKSON	NB	RT	M4–8A(O)–2418	#N/A	1
*	JACKSON	SB	RT	M4–8(O)–3015	#N/A	2
*	JACKSON	SB	RT	M4–9L(O)–3024	#N/A	1
*	JACKSON	SB	RT	M4–9R(O)–3024	#N/A	1
*	JACKSON	SB	RT	W16–5pL(O)–2418	SUPPLEMENTAL ARROW LEFT	1
*	JEFFERSON	NB	RT	M4–8(O)–3015	#N/A	2
*	JEFFERSON	NB	RT	M4–9R(O)–3024	#N/A	1
*	JEFFERSON	NB	RT	M4–10R(O)–4818	#N/A	1
*	JEFFERSON	NB	RT	W16–5pL(O)–2418	SUPPLEMENTAL ARROW LEFT	1
*	JEFFERSON	SB	RT	M4–8(O)–3015	#N/A	1
*	JEFFERSON	SB	RT	M4–8A(O)–2418	#N/A	1
*	JEFFERSON	SB	RT	M4–9R(O)–3024	#N/A	1
*	JEFFERSON	SB	RT	M4–10L(O)–4818	#N/A	1
*	JEFFERSON	SB	RT	R11–2(O)–4830	ROAD CLOSED	1
*	JEFFERSON	SB	RT	R11–4(O)–6030	ROAD CLOSED TO THRU TRAFFIC	1
*	VETERANS	NB	RT	M4–8(O)–3015	#N/A	1
*	VETERANS	NB	RT	M4–9L(O)–3024	#N/A	1
*	VETERANS	NB	RT	W16–5pL(O)–2418	SUPPLEMENTAL ARROW LEFT	1
*	VETERANS	NB	RT	W16–7pL(O)–2412	DOWNWARD DIAGONAL ARROW LEFT	1
*	VETERANS	NB	RT	W20–2(O)–48	DETOUR AHEAD	1
*	VETERANS	SB	RT	M4–8(O)–3015	#N/A	1
*	VETERANS	SB	RT	M4–9R(O)–3024	#N/A	2
*	VETERANS	SB	RT	W16–5pL(O)–2418	SUPPLEMENTAL ARROW LEFT	1

NOTE:
• SEE JEFFERSON DETOUR PLAN FOR PLACEMENT

TEMPORARY SIGN SCHEDULE
(INCLUDED IN TRAFFIC CONTROL AND PROTECTION (SPECIAL))

SIGN INDEX #	SIGN CODE	STA	OFFSET	DTL SHT #	ALIGNMENT	DIRECTION	EX OVRHD STR	EX STANDARD	EX SPECIAL	TEMP STD	TEMP SPCL	PROPOSED	DESCRIPTION	NEW STA.	NEW OFFSET	REMOVE SIGN PANEL ASSEMBLY TYPE A	REMOVE SIGN PANEL ASSEMBLY TYPE B	REMOVE GROUND MOUNTED SIGN SUPPORT	REMOVE CONCRETE FOUNDATIONS – GROUND MOUNT"	CONSTRUCT PROPOSED SIGN (SEE SIGN PLAN)
																EACH	EACH	EACH	EACH	
13.01	W3-1A	614+53.79	16.92	–	MORTON RAMP F	–		X					STOP SIGN AHEAD			1.00				
13.03	W3-1A	614+46.00	-32.01	–	MORTON RAMP F	–		X					STOP SIGN AHEAD			1.00				
13.05	D9-7	615+01.20	20.41	–	MORTON RAMP F	–			X				BLUE, GAS SIGN, RAMP TO SB MORTON AVE.					2	2	
13.07-1	R2-5C	616+41.84	-32.64	–	MORTON RAMP F	–		X					SPEED ZONE AHEAD				0.50			
13.07-2	R2-I101-24	616+41.84	-32.64	–	MORTON RAMP F	–			X				35 MPH SIGN				0.50			
18.02-2	R3-2	31+25.00	-61.97	–	MORTON	SB		X					NO LEFT TURN				0.33			
18.02-3	R5-1	31+25.00	-61.97	–	MORTON	SB		X					DO NOT ENTER				0.33			
18.04-1	R6-1R	31+83.00	-60.93	–	MORTON	SB		X					ONE WAY, RIGHT				0.33			
18.04-2	R3-2	31+83.00	-60.93	–	MORTON	SB		X					NO LEFT TURN				0.33			
18.04-3	R5-1	31+83.00	-60.93	–	MORTON	SB		X					DO NOT ENTER				0.33			
PR18.02	R5-1	–	–	–	MORTON RAMP F	EB						X	DO NOT ENTER	PR	PR					X
PR18.04	R5-1	–	–	–	MORTON RAMP F	EB						X	DO NOT ENTER	PR	PR					X
20.02	D1-I044	44+98.49	-61.20	–	MORTON	SB			X				I-74 E BLOOM MORT AVE, I-74 W PEORIA					2	2	
PR20.02		–	–	–	MORTON	SB						X	I-74 WEST PEORIA DIAGONAL RIGHT ARROW	PR	PR					X
20.04	R2-1	47+00.00	-46.62	–	MORTON	SB		X					SPEED LIMIT 40			1.00				
															TOTALS	3	3	4	4	

TEMPORARY SIGN SCHEDULE

FILE NAME =	DESIGNED - HTL	REVISED -	TERRA ENGINEERING LTD.	STATE OF ILLINOIS DEPARTMENT OF TRANSPORTATION	MAINTENANCE OF TRAFFIC STAGE 1 – SUB STAGE B – SIGN SCHEDULE
D468620-sht-sign03-B-01.dgn	DRAWN - KV	REVISED -			
USER NAME = TERRA	CHECKED - DA/LVA	REVISED -			
PLOT DATE = 7/18/2012	DATE - 7/20/2012	REVISED -			SCALE: SHEET NO. 19 OF 85 SHEETS STA. TO STA.

F.A.I. RTE.	SECTION	COUNTY	TOTAL SHEETS	SHEET NO.
•	90-[14R;(14HB-4,14,14HVB)BR]	TAZEWELL	2433	95
		CONTRACT NO. 68620		
		ILLINOIS FED. AID PROJECT		

• 74 & 155

LOCATION			AGGREGATE SUBGRADE IMPROVEMENT 8"	AGGREGATE SUBGRADE IMPROVEMENT 12"	STABILIZED SUBBASE HOT-MIX ASPHALT, 4"	AGGREGATE SHOULDERS, TYPE B 6"	PORTLAND CEMENT CONCRETE SHOULDERS 11"	PIPE UNDERDRAINS 4"	TEMPORARY PAVEMENT REMOVAL	AGGREGATE SHOULDER REMOVAL	WHITEWASHING FOR CONCRETE PAVEMENT	TEMPORARY PAVEMENT
ROAD	STATION FROM	STATION TO	SQ YD	SQ YD	SQ YD	SQ YD	SQ YD	FOOT	SQ YD	CU YD	SQ YD	SQ YD
I-474	-	456+00.00	0	0	0	0	0	0	0	0	0	0
I-74	456+00.00	471+00.00	0	0	0	0	0	0	0	0	0	0
I-74	471+00.00	486+00.00	0	0	0	0	0	0	1569	48	0	0
I-74	486+00.00	501+00.00	0	0	0	0	0	0	1699	56	0	0
I-74	501+00.00	516+00.00	0	0	0	0	0	0	1155	37	0	0
I-74	516+00.00	531+00.00	4431	0	0	216	0	0	0	0	0	4431
RAMP G/H	118+50.00	101+47.00	0	0	0	0	0	0	0	0	0	0
I-74	531+00.00	546+00.00	2674	0	0	206	0	0	0	0	0	2674
I-74	546+00.00	561+00.00	0	0	0	0	0	0	452	17	0	0
I-74	561+00.00	576+00.00	0	0	0	0	0	0	1176	44	0	0
I-74	576+00.00	591+00.00	0	0	0	0	0	0	1012	48	0	133
I-74	591+00.00	606+00.00	0	0	0	0	0	0	0	0	0	0
I-74	606+00.00	621+00.00	0	0	0	0	0	0	0	0	0	0
I-74	621+00.00	636+00.00	0	0	0	0	0	0	0	0	0	0
I-74	636+00.00	640+00.00	0	0	0	0	0	0	0	0	0	0
I-155	00+00.00	09+00.00	4009	0	0	234	0	0	535	16	0	4009
I-155	09+00.00	23+00.00	0	0	0	0	0	0	0	0	0	0
I-155	23+00.00	37+50.00	0	0	0	0	0	0	0	0	0	0
I-155	37+50.00	51+00.00	0	0	0	0	0	0	0	0	0	0
I-155	51+00.00	66+00.00	0	0	0	0	0	0	0	0	0	0
Morton Ave.	16+00.00	28+25.00	0	0	0	0	0	0	0	0	0	0
Morton Ave.	28+25.00	36+50.00	0	0	0	0	0	0	0	0	0	0
Morton Ave.	36+50.00	44+75.00	0	0	0	0	0	0	0	0	0	0
Morton Ave.	44+75.00	58+00.00	0	0	0	0	0	0	0	0	0	0
		TOTALS	11114	0	0	656	0	0	7598	266	0	11246

	GLARE SCREEN (NEW LOCATION)	GLARE SCREEN TO REMAIN	GLARE SCREEN TOTAL	TEMPORARY CONCRETE BARRIER (NEW LOCATION)	TEMPORARY CONCRETE BARRIER TO REMAIN	TEMPORARY CONCRETE BARRIER TOTAL
	FOOT	FOOT	FOOT	FOOT	FOOT	FOOT
	0	0	11203	0.0	0.0	31212.5
	391	0		312.5	1325.0	
	1500	0	GLARE SCREEN FROM PREVIOUS STAGE	1562.5	1500.0	TEMPORARY CONCRETE BARRIER FROM PREVIOUS STAGE
	1500	0		2600.0	1500.0	
	2025	0		3525.0	1500.0	
	1495	0		1537.5	1475.0	
	0	0		0.0	0.0	
	871	0		875.0	1050.0	
	1514	0		2300.0	1275.0	
	1506	0	FOOT	2125.0	950.0	FOOT
	401	0	0	1525.0	1400.0	34912.0
	0	0		937.5	1200.0	
	0	0	RELOCATE MODULAR GLARE SCREEN SYSTEM	0.0	0.0	RELOCATE TEMPORARY CONCRETE BARRIER
	0	0		0.0	0.0	
	0	0		0.0	0.0	
	0	0		650.0	0.0	
	0	0		0.0	0.0	
	0	0	FOOT	0.0	0.0	FOOT
	0	0	0	0.0	0.0	18037.5
	0	0		0.0	0.0	
	0	0	MODULAR GLARE SCREEN SYSTEM	0.0	0.0	TEMPORARY CONCRETE BARRIER
	0	0		0.0	0.0	
	0	0		87.5	0.0	
	0	0		0.0	0.0	
TOTALS	11203	0	FOOT 11203	18037.5	13175.0	FOOT 0.0

LOCATION			PAVEMENT MARKING TAPE, TY III LETTERS & SYMBOLS	PAVEMENT MARKING TAPE, TYPE III 4"	PAVEMENT MARKING TAPE, TYPE III 8"	PAVEMENT MARKING TAPE, TYPE III 12"	PAVEMENT MARKING TAPE, TYPE III 24"	WORK ZONE PAVEMENT MARKING REMOVAL	POLYUREA PAVEMENT MARKING TYPE II LINE 4"	POLYUREA PAVEMENT MARKING TYPE II LINE 8"	POLYUREA PAVEMENT MARKING TYPE II LINE 12"
ROAD	STATION FROM	STATION TO	SQ FT	FOOT	FOOT	FOOT	FOOT	SQ FT	FOOT	FOOT	FOOT
I-474	-	456+00.00	0	0	0	0	0	0	0	0	0
I-74	456+00.00	471+00.00	0	980	654	0	0	260	0	0	0
I-74	471+00.00	486+00.00	0	5750	250	0	0	200	0	0	0
I-74	486+00.00	501+00.00	0	6000	0	0	0	0	0	0	0
I-74	501+00.00	516+00.00	0	2900	0	0	0	0	3100	0	0
I-74	516+00.00	531+00.00	0	0	0	0	0	1188	5476	1792	0
RAMP G/H	118+50.00	101+47.00	0	0	0	0	0	0	0	0	0
I-74	531+00.00	546+00.00	0	0	0	0	0	1632	4538	0	0
I-74	546+00.00	561+00.00	0	1350	0	0	0	805	3599	378	0
I-74	561+00.00	576+00.00	0	4074	0	0	0	0	0	0	0
I-74	576+00.00	591+00.00	0	1124	0	0	0	1522	4216	568	0
I-74	591+00.00	606+00.00	0	367	0	0	0	1414	3623	568	0
I-74	606+00.00	621+00.00	0	1137	0	0	0	1408	2021	893	0
I-74	621+00.00	636+00.00	0	287	0	0	0	330	240	0	0
I-74	636+00.00	640+00.00	0	0	0	0	0	0	0	0	0
I-155	00+00.00	09+00.00	0	0	0	0	0	1225	3382	544	0
I-155	09+00.00	23+00.00	0	356	0	0	0	1212	3460	0	0
I-155	23+00.00	37+50.00	0	1272	0	0	0	593	0	0	0
I-155	37+50.00	51+00.00	0	0	0	0	0	0	0	0	0
I-155	51+00.00	66+00.00	0	0	0	0	0	0	0	0	0
Morton Ave.	16+00.00	28+25.00	35	2967	0	265	7	1367	0	0	0
Morton Ave.	28+25.00	36+50.00	53	5930	219	826	72	2064	0	0	0
Morton Ave.	36+50.00	44+75.00	0	5651	238	1214	3	1274	0	0	0
Morton Ave.	44+75.00	58+00.00	44	4325	453	550	0	1159	0	0	0
		TOTALS	132	44469	1814	2854	82	17653	33655	4742	0

	SHORT TERM PAVEMENT MARKING	CHANGEABLE MESSAGE SIGN
	FOOT	CAL MO
TOTAL STAGE 2A	4,382	20.00

ATTENUATOR LOCATION SCHEDULE				IMPACT ATTENUATORS WIDE NEW OR RELOCATED	IMPACT ATTENUATORS WIDE TO REMAIN	IMPACT ATTENUATORS NARROW NEW OR RELOCATED	IMPACT ATTENUATORS NARROW TO REMAIN
ROAD	STATION	OFFSET	TYPE	EACH	EACH	EACH	EACH
I-74	542+37.99	50.89	WIDE	1	0	0	0
I-74	470+84.21	55.47	WIDE	1	0	0	0
I-74	472+34.62	-24.72	WIDE	1	0	0	0
I-74	472+97.89	0.3	WIDE	1	0	0	0
I-74	553+08.91	43.58	WIDE	1	0	0	0
I-74	459+50.81	34.85	WIDE	1	0	0	0
I-74	548+52.53	22.53	WIDE	1	0	0	0
I-74	605+25.29	-16.25	NARROW		0	1	0
I-74	593+27.29	0.03	WIDE		1	0	0
I-155	13+94.78	82.75	WIDE	1	0	0	0
MORTON	42+22.04	-63.88	WIDE	1	0	0	0

	TEST LEVEL 2 ATTENUATORS NEW OR RELOCATED	TEST LEVEL 2 ATTENUATORS TO REMAIN	ATTENUATORS FROM PREVIOUS STAGE	IMPACT ATTENUATORS TEMPORARY (NON-REDRCTVE), TEST LVL 2	IMPACT ATTENUATORS, TEMPORARY (FULLY REDRCTVE, NARROW TEST LVL 2	IMPACT ATTENUATORS, RELOCATE (FULLY REDRCTVE, TEST LVL 2	IMPACT ATTENUATORS, RELOCATE (NON-REDRCTVE), TEST LVL 2
WIDE	1	0	3	0	-	-	1
NARROW	0	0	0	-	0	0	-

	TEST LEVEL 3 ATTENUATORS NEW OR RELOCATED	TEST LEVEL 3 ATTENUATORS TO REMAIN	ATTENUATORS FROM PREVIOUS STAGE	IMPACT ATTENUATORS TEMPORARY (NON-REDRCTVE), TEST LVL 3	IMPACT ATTENUATORS, TEMPORARY (FULLY REDRCTVE, NARROW TEST LVL 3	IMPACT ATTENUATORS, RELOCATE (FULLY REDRCTVE, TEST LVL 3	IMPACT ATTENUATORS, RELOCATE (NON-REDRCTVE), TEST LVL 3
WIDE	8	1	2	7	-	-	1
NARROW	1	0	2	-	1	0	-

FILE NAME = D468620-sht-schedule-02.dgn	DESIGNED - HTL	REVISED -
	DRAWN - KV	REVISED -
USER NAME = TERRA	CHECKED - DA/LVA	REVISED -
PLOT DATE = 7/29/2012	DATE - 7/20/2012	REVISED -

TERRA ENGINEERING LTD.

STATE OF ILLINOIS
DEPARTMENT OF TRANSPORTATION

MAINTENANCE OF TRAFFIC
STAGE 2A SCHEDULE OF QUANTITIES

SCALE: | SHEET NO. 20 OF 85 SHEETS | STA. | TO STA.

F.A.I. RTE.	SECTION	COUNTY	TOTAL SHEETS	SHEET NO.
•	90-I14R;(14HB-4,14,14HVD)BR1	TAZEWELL	2433	96

CONTRACT NO. 68620

ILLINOIS FED. AID PROJECT

• 74 & 155

STA	Mainline	Direction	RT/LT	MUTCD CODE	DESCRIPTION	QTY
ADV	I-474	EB	Both	R2-1-3648	SPEED LIMIT XX	2
ADV	I-474	EB	Both	R2-I106-3618	$375 FINE MINIMUM	2
ADV	I-474	EB	Both	W16-3A(O)-3612	XX MILES	2
ADV	I-474	EB	Both	W20-I103(O)-48	ROAD CONSTRUCTION AHEAD	2
ADV	I-474	EB	Both	W21-I113(O)-3612	BEGINS	2
ADV	I-474	EB	Both	W21-I115(O)-3618	WORK ZONE	2
ADV	I-474	EB	Both	Work Zone Info Sign	WORK ZONE INFORMATION	2
ADV	I-74	EB	Both	R2-1-3648	SPEED LIMIT XX	2
ADV	I-74	EB	Both	R2-I106-3618	$375 FINE MINIMUM	2
ADV	I-74	EB	Both	W1-4bR(O)-48	2 LANES SHIFT RIGHT (ARROWS)	2
ADV	I-74	EB	Both	W16-3A(O)-3612	XX MILES	2
ADV	I-74	EB	Both	W20-I103(O)-48	ROAD CONSTRUCTION AHEAD	2
ADV	I-74	EB	Both	W21-I113(O)-3612	BEGINS	2
ADV	I-74	EB	Both	W21-I115(O)-3618	WORK ZONE	2
ADV	I-74	EB	Both	Work Zone Info Sign	WORK ZONE INFORMATION	2
ADV	I-74	EB	RT	W4-1R(O)-48	MERGING TRAFFIC RIGHT SYMBOL	1
ADV	I-74	EB	RT	R1-2-48	YIELD	1
ADV	I-74	EB	RT	W3-2(O)-48	YIELD AHEAD (ARROW)	1
ADV	I-74	WB	Both	W1-4bL(O)-48	2 LANES SHIFT LEFT (ARROWS)	2
ADV	I-74	WB	Both	W16-3A(O)-3612	XX MILES	6
ADV	I-74	WB	Both	W20-I103(O)-48	ROAD CONSTRUCTION AHEAD	2
ADV	I-74	WB	Both	R2-1-3648	SPEED LIMIT XX	2
ADV	I-74	WB	Both	R2-I106-3618	$375 FINE MINIMUM	2
ADV	I-74	WB	Both	W21-I113(O)-3612	BEGINS	2
ADV	I-74	WB	Both	W21-I115(O)-3618	WORK ZONE	2
ADV	I-74	WB	Both	Work Zone Info Sign	WORK ZONE INFORMATION	2
460+00	I-74	WB	Both	G20-I103(O)-3660	END WORKZONE SPEED LIMIT	2
462+00	I-74	EB	Both	W1-4L(O)-48	LANE SHIFT LEFT (ARROW)	2
469+00	I-74	WB	Both	W1-4bR(O)-36	2 LANES SHIFT RIGHT (ARROWS)	2
469+00	I-74	WB	Both	W1-4bR(O)-36	2 LANES SHIFT RIGHT (ARROWS)	2
441+00	I-74	EB	RT	W3-2(O)-48	YIELD AHEAD (ARROW)	1
442+25	I-74	EB	Center	W4-1R(O)-48	MERGING TRAFFIC RIGHT SYMBOL	1
447+41	I-74	EB	RT	R1-2-48	YIELD	1
452+25	I-74	EB	Both	W1-4bR(O)-48	2 LANES SHIFT RIGHT (ARROWS)	2
470+60	I-74	EB	Center	W12-1(O)-48	DOUBLE ARROW	1
489+75	I-74	WB	Both	W1-4bR(O)-48	2 LANES SHIFT RIGHT (ARROWS)	2
507+00	I-74	EB	Center	W20-I105(O)-48	TRUCKS LEAVING HIGHWAY	1
508+00	I-74	EB	RT	ARROW BOARD	ARROW BOARD	1
508+00	I-74	EB	RT	W20-I908(O)-9636	BE PREPARED TO STOP	1
508+00	I-74	EB	RT	ARROW BOARD	ARROW BOARD	1
508+00	I-74	EB	RT	W20-I908(O)-9636	BE PREPARED TO STOP	1
513+00	I-74	EB	LT	W20-7(O)-48	FLAGGER SYMBOL	1
513+00	I-74	EB	LT	W16-3A(O)-3612	XX MILES	1
517+25	I-74	WB	RT	R1-2-48	YIELD	1
519+00	I-74	EB	LT	W1-4R(O)-48	LANE SHIFT RIGHT (ARROW)	1
522+75	I-74	WB	RT	W4-1R(O)-48	MERGING TRAFFIC RIGHT SYMBOL	1
524+10	I-74	EB	Center	W4-3L(O)-48	ADDED LANE RIGHT SYMBOL	1
528+25	I-74	EB	Both	W24-1AR(O)-48	DOUBLE REVERSE CURVE RIGHT (ARROWS)	2
530+00	I-74	WB	RT	W20-I900R-4836	CRASH INVESTIGATION SITE (ARROW RIGHT)	1
531+70	I-74	WB	RT	W20-I900R-4836	CRASH INVESTIGATION SITE (ARROW RIGHT)	1
533+50	I-74	EB	Both	W5-2(O)-48	NARROW BRIDGE	2
543+50	I-74	WB	Both	W1-4bR(O)-36	2 LANES SHIFT RIGHT (ARROWS)	2
543+50	I-74	WB	Both	W1-4bR(O)-36	2 LANES SHIFT RIGHT (ARROWS)	2
544+00	I-74	EB	Both	W5-2(O)-48	NARROW BRIDGE	2
545+50	I-74	WB	Both	W5-2(O)-48	NARROW BRIDGE	2
548+00	I-74	EB	RT	W20-7(O)-48	FLAGGER SYMBOL	1
548+00	I-74	EB	RT	W16-3A(O)-3612	XX MILES	1

STA	Mainline	Direction	RT/LT	MUTCD CODE	DESCRIPTION	QTY
549+10	I-74	EB	RT	W4-1R(O)-48	MERGING TRAFFIC RIGHT SYMBOL	2
553+80	I-74	WB	Both	W1-4bR(O)-36	2 LANES SHIFT RIGHT (ARROWS)	2
556+00	I-74	WB	Both	W5-2(O)-48	NARROW BRIDGE	2
556+30	I-74	EB	RT	R1-2-48	YIELD	1
561+50	I-74	WB	Both	W1-4bR(O)-36	2 LANES SHIFT RIGHT (ARROWS)	2
563+00	I-74	EB	Both	W5-2(O)-48	NARROW BRIDGE	2
572+50	I-74	EB	Both	W1-4bR(O)-48	2 LANES SHIFT RIGHT (ARROWS)	2
575+00	I-74	WB	Both	W5-2(O)-48	NARROW BRIDGE	2
577+00	I-74	WB	Both	W24-1AL(O)-48	DOUBLE REVERSE CURVE LEFT (ARROWS)	2
578+38	I-74	WB	RT	R1-2-48	YIELD	1
590+75	I-74	WB	RT	R1-2-48	YIELD	1
599+00	I-74	WB	Both	W20-I900R-4836	CRASH INVESTIGATION SITE (ARROW RIGHT)	2
616+50	I-74	WB	Both	W1-4bR(O)-48	2 LANES SHIFT RIGHT (ARROWS)	2
620+50	I-74	EB	Both	G20-I103(O)-3660	END WORKZONE SPEED LIMIT	2
108+00	Ex. Ramp A	WB	Both	W20-I103(O)-36	ROAD CONSTRUCTION AHEAD	2
113+00	Ex. Ramp A	WB	Both	W3-2(O)-48	YIELD AHEAD (ARROW)	2
318+00	Ex. Ramp C		Both	W3-2(O)-48	YIELD AHEAD (ARROW)	2
216+00	Ex. Ramp B		Both	W20-I103(O)-48	ROAD CONSTRUCTION AHEAD	2
221+00	Ex. Ramp B		Both	W21-1A(O)-48	WORKERS SYMBOL	2
210+65	Ex. Ramp E	EB	Both	W3-2(O)-48	YIELD AHEAD (ARROW)	2
214+00	Ex. Ramp E	EB	RT	W20-I105(O)-48	TRUCKS LEAVING HIGHWAY	1
508+00	Ramp E	WB	Both	W3-2(O)-48	YIELD AHEAD (ARROW)	2
16+00	Ramp E	SB	Both	W1-4R(O)-48	LANE SHIFT RIGHT (ARROW)	2
13+75	Ramp E	SB	Both	W21-1A(O)-48	WORKERS SYMBOL	2
335+00	Ex. Ramp F	SB	Both	W24-1L(O)-48	SINGLE REVERSE CURVE LEFT (ARROWS)	2
117+00	Ramp H	WB	Both	W3-2(O)-48	YIELD AHEAD (ARROW)	2
ADV	I-155	NB	Both	W16-3A(O)-3612	XX MILES	4
ADV	I-155	NB	Both	W20-I103(O)-48	ROAD CONSTRUCTION AHEAD	2
ADV	I-155	NB	Both	Work Zone Info Sign	WORK ZONE INFORMATION	2
ADV	I-155	NB	Both	R2-1-3648	SPEED LIMIT XX	2
ADV	I-155	NB	Both	R2-I106-3618	$375 FINE MINIMUM	2
ADV	I-155	NB	Both	W21-I113(O)-3612	BEGINS	2
ADV	I-155	NB	Both	W21-I115(O)-3618	WORK ZONE	2
ADV	I-156	NB	Both	W1-4BR(O)-48	2 LANES SHIFT RIGHT (ARROWS)	2
9+50	I-155	SB	Both	W24-1L(O)-48	SINGLE REVERSE CURVE LEFT (ARROWS)	2
15+05	I-155	SB	Center	W4-3R(O)-48	ADDED LANE RIGHT SYMBOL	1
32+00	I-155	SB	Both	G20-I103(O)-3660	END WORKZONE SPEED LIMIT	2
ADV	I-155 On Ramp	NB	Both	W20-I103(O)-48	ROAD CONSTRUCTION AHEAD	2
16+35	Morton	NB	RT	W20-I103(O)-48	ROAD CONSTRUCTION AHEAD	1
16+35	Morton	NB	RT	W20-I103(O)-48	ROAD CONSTRUCTION AHEAD	1
24+80	Morton	NB	RT	R3-2-36	NO LEFT TURN (ARROW)	1
26+15	Morton	SB	RT	R3-2-36	NO LEFT TURN (ARROW)	1
34+35	Morton	SB	RT	R10-11-3648	NO TURN ON RED	1
39+50	Morton	NB	RT	W20-I900R-4836	CRASH INVESTIGATION SITE (ARROW RIGHT)	1
50+10	Morton	SB	RT	W20-I103(O)-36	ROAD CONSTRUCTION AHEAD	1
51+50	Morton	SB	RT	W21-1A(O)-36	WORKERS SYMBOL	1
*	DETROIT	NB	RT	W20-I902R(O)-48	RIGHT LANE EXIT ONLY	1
*	DETROIT	SB	RT	W20-3(O)-36	ROAD CLOSED AHEAD	2
*	DETROIT	SB	RT	W20-7(O)-48	FLAGGER SYMBOL	1
*	DETROIT	SB	RT	W20-I103(O)-36	ROAD CONSTRUCTION AHEAD	1
*	JACKSON	SB	RT	W20-3(O)-36	ROAD CLOSED AHEAD	1
*	JEFFERSON	NB	RT	W20-3(O)-36	ROAD CLOSED AHEAD	1
*	JEFFERSON	SB	RT	R11-2(O)-4830	ROAD CLOSED	1
*	JEFFERSON	SB	RT	R11-4(O)-6030	ROAD CLOSED TO THRU TRAFFIC	1
*	VETERANS	NB	RT	W20-3(O)-36	ROAD CLOSED AHEAD	1
*	VETERANS	NB	RT	W20-7(O)-48	FLAGGER SYMBOL	1
*	VETERANS	NB	RT	W20-I103(O)-36	ROAD CONSTRUCTION AHEAD	1
*	VETERANS	SB	RT	W16-5pL(O)-2418	SUPPLEMENTAL ARROW LEFT	1

TEMPORARY SIGN SCHEDULE (INCLUDED IN TRAFFIC CONTROL AND PROTECTION (SPECIAL))

SIGN INDEX #	SIGN CODE	STA	OFFSET	DTL SHT #	ALIGNMENT	DIRECTION	EX OVRHD STR	EX STANDARD	EX SPECIAL	TEMP STD	TEMP SPCL	PROPOSED	DESCRIPTION	NEW STA.	NEW OFFSET	REMOVE SIGN PANEL ASSEMBLY TYPE A	REMOVE SIGN PANEL ASSEMBLY TYPE B	REMOVE GROUND MOUNTED SUPPORT	REMOVE CONCRETE FOUNDATIONS MOUNT	TEMPORARY SIGN PANEL ASSEMBLY	TEMPORARY SIGN PANEL OVERLAY	CONSTRUCT PROPOSED SIGN (SEE SIGN PLAN)
																EACH	EACH	EACH	EACH	SQ FT	SQ FT	
2T.01-R		-	-	262	I-74	EB					X		I-74 E ALL LANES, I-155 S RT LANE ONLY 1 MILE	415+91.00						175		
2T.01-L		-	-	262	I-74	EB					X		I-74 E ALL LANES, I-155 S RT LANE ONLY 1 MILE	415+91.00						175		
2T.03		-	-	262	I-74	EB					X		I-74 E ALL LANES, I-155 S RT LANE ONLY 1/2 MILE	442+31.05	-5.63					175		
2T.02-R		-	-	262	I-474	EB					X		I-74 E ALL LANES, I-155 S RT LANE ONLY 1 MILE	415+91.00						175		
2T.02-L		-	-	262	I-474	EB					X		I-74 E ALL LANES, I-155 S RT LANE ONLY 1 MILE	415+91.00						175		
2T.04		-	-	262	I-474	EB					X		I-74 E ALL LANES, I-155 S RT LANE ONLY 1/2 MILE	442+31.19	102.02					175		
3.01-2.2		-	-	264	I-74	EB					X		OVERLAY - "KEEP RIGHT"	460+42.00							21	
4.05	D10-6	481+21.46	68.17	-	I-74	EB		X					MILE MARKER 100			1.00						
PR4.05		-	-	-	I-74	EB						X	PROPOSED MILE MARKER (101)	PR	PR							X
4.07-2.2		-	-	264	I-74	EB					X		OVERLAY - "RIGHT LANE"	482+48.00							21	
6T.01		503+00.00	81.00	266	I-74	EB					X		I-74 AHEAD EXIT I-155 SOUTH LINCOLN EXIT 101	518+00.00	35.00					RELOCATE		
7.01	D9-I105	526+27.85	65.31	-	I-74	EB			X				EXIT 101 W/ ARROW	523+64.50	30.00					RELOCATE		
10.01	W4-1R	546+91.00	69.68	-	I-74	EB		X					MERGE				1.00					
12.09	D9-8	589+00.00	227.09	-	I-74	EB			X				BLUE FOOD SIGN					2	2			
PR18.06	R2-1	-	-	-	MORTON	SB						X	SPEED LIMIT 40	PR	PR							X
															TOTALS	1	1	2	2	1050	43	

TEMPORARY SIGN SCHEDULE

LOCATION			AGGREGATE SUBGRADE IMPROVEMENT 8"	AGGREGATE SUBGRADE IMPROVEMENT 12"	STABILIZED SUBBASE HOT-MIX ASPHALT, 4"	AGGREGATE SHOULDERS, TYPE B 6"	PORTLAND CEMENT CONCRETE SHOULDERS 11"	PIPE UNDERDRAINS 4"	TEMPORARY PAVEMENT REMOVAL	AGGREGATE SHOULDER REMOVAL	WHITEWASHING FOR CONCRETE PAVEMENT	TEMPORARY PAVEMENT
ROAD	STATION FROM	STATION TO	SQ YD	SQ YD	SQ YD	SQ YD	SQ YD	FOOT	SQ YD	CU YD	SQ YD	SQ YD
I-474	-	456+00.00	0	0	0	0	0	0	0	0	0	0
I-74	456+00.00	471+00.00	0	0	0	0	0	0	0	0	0	0
I-74	471+00.00	486+00.00	0	0	0	0	0	0	0	0	0	0
I-74	486+00.00	501+00.00	0	0	0	0	0	0	0	0	0	0
I-74	501+00.00	516+00.00	0	0	0	0	0	0	0	0	0	0
I-74	516+00.00	531+00.00	3209	0	0	0	0	0	1390	0	0	4991
RAMP G/H	118+50.00	101+47.00	0	0	0	0	0	0	0	0	0	0
I-74	531+00.00	546+00.00	0	0	0	0	0	0	0	0	0	0
I-74	546+00.00	561+00.00	0	0	0	0	0	0	0	0	0	0
I-74	561+00.00	576+00.00	0	0	0	0	0	0	0	0	0	0
I-74	576+00.00	591+00.00	0	0	0	0	0	0	0	0	0	0
I-74	591+00.00	606+00.00	0	0	0	0	0	0	0	0	0	0
I-74	606+00.00	621+00.00	0	0	0	0	0	0	0	0	0	0
I-74	621+00.00	636+00.00	0	0	0	0	0	0	0	0	0	0
I-74	636+00.00	640+00.00	0	0	0	0	0	0	0	0	0	0
I-155	00+00.00	09+00.00	0	0	0	0	0	0	0	0	0	0
I-155	09+00.00	23+00.00	0	0	0	0	0	0	0	0	0	0
I-155	23+00.00	37+50.00	0	0	0	0	0	0	0	0	0	0
I-155	37+50.00	51+00.00	0	0	0	0	0	0	0	0	0	0
I-155	51+00.00	66+00.00	0	0	0	0	0	0	0	0	0	0
Morton Ave.	16+00.00	28+25.00	0	0	0	0	0	0	0	0	0	0
Morton Ave.	28+25.00	36+50.00	0	0	0	0	0	0	0	0	0	0
Morton Ave.	36+50.00	44+75.00	0	0	0	0	0	0	0	0	0	0
Morton Ave.	44+75.00	58+00.00	0	0	0	0	0	0	0	0	0	0
		TOTALS	3209	0	0	0	0	0	1390	0	0	4991

	GLARE SCREEN (NEW LOCATION)	GLARE SCREEN TO REMAIN	GLARE SCREEN ON-SITE	TEMPORARY CONCRETE BARRIER (NEW LOCATION)	TEMPORARY CONCRETE BARRIER TO REMAIN	TEMPORARY CONCRETE BARRIER ON-SITE
	FOOT	FOOT	FOOT	FOOT	FOOT	FOOT
	0	0	11204	0.0	0.0	27462.5
	0	391		362.5	1625.0	
	0	1500	GLARE	175.0	2937.5	TEMPORARY
	0	1500	SCREEN	0.0	2300.0	CONCRETE
	0	2025	FROM	400.0	2025.0	BARRIER
	0	1495	PREVIOUS	2400.0	1500.0	FROM
	0	0	STAGE	0.0	0.0	PREVIOUS
	0	871		0.0	1925.0	STAGE
	0	1515		0.0	3575.0	
	0	1506	FOOT	0.0	3075.0	FOOT
	0	401	11203	0.0	2937.5	31212.0
	0	0		0.0	2137.5	
	0	0	RELOCATE	0.0	0.0	RELOCATE
	0	0	MODULAR	0.0	0.0	TEMPORARY
	0	0	GLARE SCREEN	0.0	0.0	CONCRETE
	0	0	SYSTEM	0.0	0.0	BARRIER
	0	0		0.0	0.0	
	0	0	FOOT	0.0	0.0	FOOT
	0	0	0	0.0	0.0	3337.5
	0	0		0.0	0.0	
	0	0	MODULAR	0.0	0.0	TEMPORARY
	0	0	GLARE SCREEN	0.0	0.0	CONCRETE
	0	0	SYSTEM	0.0	87.5	BARRIER
	0	0		0.0	0.0	
			FOOT			FOOT
TOTALS	0	11204	1	3337.5	24125.0	0.0

LOCATION			PAVEMENT MARKING TAPE, TY III LETTERS & SYMBOLS	PAVEMENT MARKING TAPE, TYPE III 4"	PAVEMENT MARKING TAPE, TYPE III 8"	PAVEMENT MARKING TAPE, TYPE III 12"	PAVEMENT MARKING TAPE, TYPE III 24"	WORK ZONE PAVEMENT MARKING REMOVAL	POLYUREA PAVEMENT MARKING TYPE II LINE 4"	POLYUREA PAVEMENT MARKING TYPE II LINE 8"	POLYUREA PAVEMENT MARKING TYPE II LINE 12"
ROAD	STATION FROM	STATION TO	SQ FT	FOOT	FOOT	FOOT	FOOT	SQ FT	FOOT	FOOT	FOOT
I-474	-	456+00.00	0	204	0	0	0	1716	5596	0	0
I-74	456+00.00	471+00.00	0	3760	0	0	0	1280	0	0	0
I-74	471+00.00	486+00.00	0	3750	0	0	0	1998	0	0	0
I-74	486+00.00	501+00.00	0	4101	1200	0	0	1998	0	0	0
I-74	501+00.00	516+00.00	0	3190	1909	0	0	1998	1285	459	0
I-74	516+00.00	531+00.00	0	362	0	0	0	2463	6322	0	0
RAMP G/H	118+50.00	101+47.00	0	0	0	0	0	0	0	0	0
I-74	531+00.00	546+00.00	0	0	0	0	0	586	2335	0	0
I-74	546+00.00	561+00.00	0	0	0	0	0	0	0	0	0
I-74	561+00.00	576+00.00	0	0	0	0	0	0	0	0	0
I-74	576+00.00	591+00.00	0	0	0	0	0	0	0	0	0
I-74	591+00.00	606+00.00	0	0	0	0	0	0	0	0	0
I-74	606+00.00	621+00.00	0	0	0	0	0	0	0	0	0
I-74	621+00.00	636+00.00	0	0	0	0	0	0	0	0	0
I-74	636+00.00	640+00.00	0	0	0	0	0	0	0	0	0
I-155	00+00.00	09+00.00	0	0	0	0	0	2733	7414	1490	0
I-155	09+00.00	23+00.00	0	360	0	0	0	2339	6096	598	0
I-155	23+00.00	37+50.00	0	577	505	0	0	1101	2875	0	0
I-155	37+50.00	51+00.00	0	0	0	0	0	0	0	0	0
I-155	51+00.00	66+00.00	0	0	0	0	0	0	0	0	0
Morton Ave.	16+00.00	28+25.00	0	0	0	0	0	0	0	0	0
Morton Ave.	28+25.00	36+50.00	0	0	0	0	0	0	0	0	0
Morton Ave.	36+50.00	44+75.00	0	0	0	0	0	0	0	0	0
Morton Ave.	44+75.00	58+00.00	0	0	0	0	0	0	0	0	0
		TOTALS	0	16303	3614	0	0	18212	31923	2547	0

	SHORT TERM PAVEMENT MARKING	CHANGEABLE MESSAGE SIGN
	FOOT	CAL MO
TOTAL STAGE 2B	2,719	6.75

ATTENUATOR LOCATION SCHEDULE				IMPACT ATTENUATORS WIDE NEW OR RELOCATED	IMPACT ATTENUATORS WIDE TO REMAIN	IMPACT ATTENUATORS NARROW NEW OR RELOCATED	IMPACT ATTENUATORS NARROW TO REMAIN
ROAD	STATION	OFFSET	TYPE				
				EACH	EACH	EACH	EACH
I-74	472+97.86	0	WIDE		1	0	0
I-74	505+93.33	-21.33	NARROW		0	0	1
I-74	542+37.99	50.89	WIDE		1	0	0
I-74	548+52.53	22.53	WIDE		1	0	0
I-74	553+08.91	43.58	WIDE		1	0	0
I-74	580+76.40	36.62	WIDE		1	0	0
I-74	593+27.29	0.03	WIDE		1	0	0
I-74	605+34.06	-16.24	NARROW		0	1	0

	TEST LEVEL 2 ATTENUATORS NEW OR RELOCATED	TEST LEVEL 2 ATTENUATORS TO REMAIN	ATTENUATORS FROM PREVIOUS STAGE	IMPACT ATTENUATORS TEMPORARY (NON-REDRCTVE), TEST LVL 2	IMPACT ATTENUATORS, TEMPORARY (FULLY REDRCTVE, NARROW TEST LVL 2	IMPACT ATTENUATORS, RELOCATE (FULLY REDRCTVE, TEST LVL 2	IMPACT ATTENUATORS, RELOCATE (NON-REDRCTVE), TEST LVL 2
WIDE	0	0	1	0	-	-	0
NARROW	0	0	0	-	0	0	-

	TEST LEVEL 3 ATTENUATORS NEW OR RELOCATED	TEST LEVEL 3 ATTENUATORS TO REMAIN	ATTENUATORS FROM PREVIOUS STAGE	IMPACT ATTENUATORS TEMPORARY (NON-REDRCTVE), TEST LVL 3	IMPACT ATTENUATORS, TEMPORARY (FULLY REDRCTVE, NARROW TEST LVL 3	IMPACT ATTENUATORS, RELOCATE (FULLY REDRCTVE, TEST LVL 3	IMPACT ATTENUATORS, RELOCATE (NON-REDRCTVE), TEST LVL 3
WIDE	0	6	9	0	-	-	0
NARROW	1	1	1	-	0	1	-

STA	Mainline	Direction	RT/LT	MUTCD CODE	DESCRIPTION	QTY
ADV	I-474	EB	Both	R2-1-3648	SPEED LIMIT XX	2
ADV	I-474	EB	Both	W1-4cR(O)-48	3 LANES SHIFT RIGHT (ARROWS)	4
ADV	I-474	EB	Both	W16-3A(O)-3612	XX MILES	6
ADV	I-474	EB	Both	W20-I103(O)-48	ROAD CONSTRUCTION AHEAD	2
ADV	I-474	EB	Both	W21-I113(O)-3612	BEGINS	2
ADV	I-474	EB	Both	W21-I115(O)-3618	WORK ZONE	2
ADV	I-474	EB	Both	R2-I106-3618	$375 FINE MINIMUM	2
ADV	I-474	EB	Both	Work Zone Info Sign	WORK ZONE INFORMATION	2
ADV	I-474	EB	Both	W4-1L(O)-48	MERGING TRAFFIC LEFT SYMBOL	1
ADV	I-74	EB	Both	R2-1-3648	SPEED LIMIT XX	2
ADV	I-74	EB	Both	R2-I106-3618	$375 FINE MINIMUM	2
ADV	I-74	EB	Both	W1-4cR(O)-48	3 LANES SHIFT RIGHT (ARROWS)	4
ADV	I-74	EB	Both	W16-3A(O)-3612	XX MILES	6
ADV	I-74	EB	Both	W20-I103(O)-48	ROAD CONSTRUCTION AHEAD	2
ADV	I-74	EB	Both	W21-I113(O)-3612	BEGINS	2
ADV	I-74	EB	Both	W21-I115(O)-3618	WORK ZONE	2
ADV	I-74	EB	Both	Work Zone Info Sign	WORK ZONE INFORMATION	2
ADV	I-74	WB	Both	W1-4bL(O)-48	2 LANES SHIFT LEFT (ARROWS)	2
ADV	I-74	WB	Both	W16-3A(O)-3612	XX MILES	6
ADV	I-74	WB	Both	W20-I103(O)-48	ROAD CONSTRUCTION AHEAD	2
ADV	I-74	WB	Both	R2-1-3648	SPEED LIMIT XX	2
ADV	I-74	WB	Both	R2-I106-3618	$375 FINE MINIMUM	2
ADV	I-74	WB	Both	W21-I113(O)-3612	BEGINS	2
ADV	I-74	WB	Both	W21-I115(O)-3618	WORK ZONE	2
ADV	I-74	WB	Both	Work Zone Info Sign	WORK ZONE INFORMATION	2
454+00	I-74	EB	Both	W1-4cR(O)-48	3 LANES SHIFT RIGHT (ARROWS)	2
460+00	I-74	WB	Both	G20-I103(O)-3660	END WORKZONE SPEED LIMIT	2
469+00	I-74	WB	Both	W1-4bL(O)-48	2 LANES SHIFT LEFT (ARROWS)	2
490+00	I-74	WB	Both	W1-4bR(O)-48	2 LANES SHIFT RIGHT (ARROWS)	2
491+00	I-74	EB	LT	W1-4bL(O)-48	2 LANES SHIFT LEFT (ARROWS)	1
499+60	I-74	EB	Center	W12-1(O)-36	DOUBLE ARROW	1
466+00	I-74	EB	RT	W20-I105(O)-48	TRUCKS LEAVING HIGHWAY	1
514+30	I-74	WB	RT	R1-2-48	YIELD	1
513+00	I-74	EB	LT	W20-7(O)-48	FLAGGER SYMBOL	1
513+00	I-74	EB	LT	W16-3A(O)-3612	XX MILES	1
508+00	I-74	EB	RT	ARROW BOARD	ARROW BOARD	1
508+00	I-74	EB	RT	W20-I908(O)-9636	BE PREPARED TO STOP	1
522+75	I-74	WB	RT	W4-1R(O)-48	MERGING TRAFFIC RIGHT SYMBOL	1
526+00	I-74	EB	Both	W24-1AR(O)-48	DOUBLE REVERSE CURVE RIGHT (ARROWS)	2
530+00	I-74	WB	RT	W20-I900R-4836	CRASH INVESTIGATION SITE (ARROW RIGHT)	1
531+70	I-74	WB	RT	W20-I900R-4836	CRASH INVESTIGATION SITE (ARROW RIGHT)	1
532+70	I-74	WB	Both	W1-4bR(O)-48	2 LANES SHIFT RIGHT (ARROWS)	2
545+50	I-74	WB	Both	W5-2(O)-48	NARROW BRIDGE	2
549+10	I-74	EB	RT	W4-1R(O)-48	MERGING TRAFFIC RIGHT SYMBOL	2
553+80	I-74	WB	Both	W1-4bL(O)-48	2 LANES SHIFT LEFT (ARROWS)	2
556+00	I-74	WB	Both	W5-2(O)-48	NARROW BRIDGE	2
556+30	I-74	EB	RT	R1-2-48	YIELD	1
561+50	I-74	WB	Both	W1-4bR(O)-36	2 LANES SHIFT RIGHT (ARROWS)	2
563+00	I-74	EB	Both	W5-2(O)-48	NARROW BRIDGE	2
572+50	I-74	EB	Both	W1-4bR(O)-48	2 LANES SHIFT RIGHT (ARROWS)	2
575+00	I-74	WB	Both	W5-2(O)-48	NARROW BRIDGE	2
577+00	I-74	WB	Both	W24-1AL(O)-48	DOUBLE REVERSE CURVE LEFT (ARROWS)	2
578+38	I-74	WB	RT	R1-2-48	YIELD	1
590+75	I-74	WB	RT	R1-2-48	YIELD	1
599+00	I-74	WB	Both	W20-I900R-4836	CRASH INVESTIGATION SITE (ARROW RIGHT)	2
616+50	I-74	WB	Both	W1-4bR(O)-48	2 LANES SHIFT RIGHT (ARROWS)	2
599+00	I-74	EB	RT	W20-I901L-4836	CRASH INVESTIGATION SITE (ARROW LEFT)	1

STA	Mainline	Direction	RT/LT	MUTCD CODE	DESCRIPTION	QTY
318+00	EX Ramp A		Both	W3-2(O)-48	YIELD AHEAD (ARROW)	2
108+00	Ex. Ramp A	WB	Both	W20-I900R-4836	CRASH INVESTIGATION SITE (ARROW RIGHT)	2
113+00	Ramp A	WB	Both	W3-2(O)-48	YIELD AHEAD (ARROW)	2
217+00	EX Ramp B		Both	W20-I103(O)-48	ROAD CONSTRUCTION AHEAD	2
221+00	EX Ramp B		Both	W21-1A(O)-48	WORKERS SYMBOL	2
42+20	EX Ramp C		Both	G20-I103(O)-3660	END WORKZONE SPEED LIMIT	2
210+65	EX Ramp E	EB	Both	W3-2(O)-48	YIELD AHEAD (ARROW)	2
220+00	EX Ramp E	EB	Right	R2-1-3648	SPEED LIMIT XX	1
220+00	EX Ramp E	EB	Right	R2-I106-3618	$375 FINE MINIMUM	1
220+00	EX Ramp E	EB	Right	W21-I113(O)-3612	BEGINS	1
220+00	EX Ramp E	EB	Right	W21-I115(O)-3618	WORK ZONE	1
508+00	Ramp E	WB	Both	W3-2(O)-48	YIELD AHEAD (ARROW)	2
16+00	Ramp E	SB	Both	W1-4R(O)-48	LANE SHIFT RIGHT (ARROW)	2
13+75	Ramp E	SB	Both	W21-1A(O)-48	WORKERS SYMBOL	2
122+00	EX Ramp H	WB	Right	R2-1-3648	SPEED LIMIT XX	1
122+00	EX Ramp H	WB	Right	R2-I106-3618	$375 FINE MINIMUM	1
122+00	EX Ramp H	WB	Right	W21-I113(O)-3612	BEGINS	1
122+00	EX Ramp H	WB	Right	W21-I115(O)-3618	WORK ZONE	1
117+00	EX Ramp H	WB	Both	W3-2(O)-48	YIELD AHEAD (ARROW)	2
ADV	I-155	NB	Both	W16-3A(O)-3612	XX MILES	2
ADV	I-155	NB	Both	W20-I103(O)-48	ROAD CONSTRUCTION AHEAD	2
ADV	I-155	NB	Both	Work Zone Info Sign	WORK ZONE INFORMATION	2
9+50	I-155	SB	Both	W1-4R(O)-48	LANE SHIFT RIGHT (ARROW)	2
18+65	I-155	SB	Center	W4-3R(O)-48	ADDED LANE RIGHT SYMBOL	1
19+00	I-155	NB	Both	W20-I103(O)-48	ROAD CONSTRUCTION AHEAD	2
35+75	I-155	NB	RT	R1-2-48	YIELD	1
40+00	I-155	NB	RT	R1-2-48	YIELD	1
43+00	I-155	NB	RT	R2-1-3648	SPEED LIMIT XX	1
43+00	I-155	NB	RT	R2-I106-3618	$375 FINE MINIMUM	1
43+00	I-155	NB	RT	W21-I113(O)-3612	BEGINS	1
43+00	I-155	NB	RT	W21-I115(O)-3618	WORK ZONE	1
46+00	I-155	NB	RT	W3-2(O)-48	YIELD AHEAD (ARROW)	1
51+00	I-155	SB	Both	G20-I103(O)-3660	END WORKZONE SPEED LIMIT	2
ADV	I-155 On Ramp	NB	Both	W20-I103(O)-48	ROAD CONSTRUCTION AHEAD	2
16+35	Morton	NB	RT	W1-4bR(O)-36	2 LANES SHIFT RIGHT (ARROWS)	1
16+35	Morton	NB	RT	W20-I103(O)-36	ROAD CONSTRUCTION AHEAD	2
24+80	Morton	NB	RT	R3-2-36	NO LEFT TURN (ARROW)	1
26+15	Morton	SB	RT	R3-2-36	NO LEFT TURN (ARROW)	1
34+35	Morton	SB	RT	R10-11-3648	NO TURN ON RED	1
39+50	Morton	NB	RT	W20-I900R-4836	CRASH INVESTIGATION SITE (ARROW RIGHT)	1
50+10	Morton	SB	RT	W20-I103(O)-36	ROAD CONSTRUCTION AHEAD	1
51+50	Morton	SB	RT	W21-1A(O)-36	WORKERS SYMBOL	1
*	DETROIT	NB	RT	W20-I903R(O)-3618	RIGHT LANE ONLY	1
*	DETROIT	SB	RT	W20-5(O)-48	RIGHT LANE CLOSED 1/2 MILE	2
*	DETROIT	SB	RT	W20-I103(O)-36	ROAD CONSTRUCTION AHEAD	1
*	DETROIT	SB	RT	W20-I103(O)-48	ROAD CONSTRUCTION AHEAD	1
*	JACKSON	SB	RT	W20-5(O)-48	RIGHT LANE CLOSED 1/2 MILE	1
*	JEFFERSON	NB	RT	W20-5(O)-48	RIGHT LANE CLOSED 1/2 MILE	1
*	JEFFERSON	SB	RT	R11-2(O)-4830	ROAD CLOSED	1
*	JEFFERSON	SB	RT	R11-4(O)-6030	ROAD CLOSED TO THRU TRAFFIC	1
*	VETERANS	NB	RT	W20-5(O)-48	RIGHT LANE CLOSED 1/2 MILE	1
*	VETERANS	NB	RT	W20-I103(O)-36	ROAD CONSTRUCTION AHEAD	1
*	VETERANS	NB	RT	W20-I103(O)-48	ROAD CONSTRUCTION AHEAD	1
*	VETERANS	SB	RT	W20-5(O)-48	RIGHT LANE CLOSED 1/2 MILE	1

TEMPORARY SIGN SCHEDULE

(INCLUDED IN TRAFFIC CONTROL AND PROTECTION (SPECIAL))

SCHEDULE OF SHARED PAY ITEMS

CODE NUMBER	DESCRIPTION	UNIT	TOTAL	ROADWAY* FAI 74 / FAI 155	I-155 OVER I-74 (RAMPS G & H)	I-74 OVER ABANDONED RAILROAD DEMOLITION	I-74 OVER JEFFERSON ST	I-74 OVER US 150 (JACKSON ST)	I-74 / I-155 OVERHEAD SIGN STRUCTURES	MORTON AVE. OVER I-74	TRAFFIC SIGNALS	LIGHTING	SIGNING	LANDSCAPING	ITS	PINECREST DR	EVP
30300112	AGGREGATE SUBGRADE IMPROVEMENT 12"	SQ YD	267,195	267,195	-	-	-	-	-	-	-	-	-	-	-	-	-
31200500	STABILIZED SUBBASE - HOT-MIX ASPHALT, 4"	SQ YD	267,195	267,195	-	-	-	-	-	-	-	-	-	-	-	-	-
40600982	HOT-MIX ASPHALT SURFACE REMOVAL - BUTT JOINT	SQ YD	4,222	1,595	800	1,027	-	800	-	-	-	-	-	-	-	-	-
40600990	TEMPORARY RAMP	SQ YD	6,505	6,000	134	172	-	134	-	-	-	-	-	-	-	65	-
40603360	HOT-MIX ASPHALT SURFACE COURSE, MIX "E", N50	TON	708.20	-	166.20	211.20	-	242.30	-	-	-	-	-	-	-	88.50	-
44003100	MEDIAN REMOVAL	SQ FT	34,533	33,852	-	-	-	-	-	-	-	-	-	-	-	681	-
48101500	AGGREGATE SHOULDERS, TYPE B 6"	SQ YD	18,515	18,515	-	-	-	-	-	-	-	-	-	-	-	-	-
48300600	PORTLAND CEMENT CONCRETE SHOULDERS 11"	SQ YD	68,449	68,449	-	-	-	-	-	-	-	-	-	-	-	-	-
50800205	REINFORCEMENT BARS, EPOXY COATED	POUND	1,040,980	1,180	264,120	-	297,740	461,500	-	16,440	-	-	-	-	-	-	-
60107600	PIPE UNDERDRAINS 4"	FOOT	53,339	53,339	-	-	-	-	-	-	-	-	-	-	-	-	-
64301090	ATTENUATOR BASE	SQ YD	236	134	-	-	-	-	-	-	-	-	-	-	102	-	-
78009000	MODIFIED URETHANE PAVEMENT MARKING - LETTERS AND SYMBOLS	SQ FT	1,002	982	-	-	-	-	-	-	-	-	-	-	-	20	-
78009004	MODIFIED URETHANE PAVEMENT MARKING - LINE 4"	FOOT	144,345	143,513	-	-	-	-	-	-	-	-	-	-	-	832	-
78009008	MODIFIED URETHANE PAVEMENT MARKING - LINE 8"	FOOT	22,174	21,978.00	-	-	-	-	-	-	-	-	-	-	-	196.00	-
80400100	ELECTRIC SERVICE INSTALLATION	EACH	4	-	-	-	-	-	-	-	-	3.00	-	-	1.00	-	-
81028350	UNDERGROUND CONDUIT, PVC, 2" DIA.	FOOT	22,358	-	-	-	-	-	-	-	3,129	2,141	-	-	17,088	-	-
81028370	UNDERGROUND CONDUIT, PVC, 3" DIA.	FOOT	430	-	-	-	-	-	-	-	200	-	-	-	230	-	-
81200230	CONDUIT EMBEDDED IN STRUCTURE, 2" DIA., PVC	FOOT	15,989	-	-	-	-	-	-	-	-	14,869	-	-	1,120	-	-
81400200	HEAVY-DUTY HANDHOLE	EACH	24	4	-	-	-	-	-	-	-	-	-	-	20	-	-
81400700	HANDHOLE, PORTLAND CEMENT CONCRETE	EACH	15	-	-	-	-	-	-	-	13	-	-	-	2	-	-
81702130	ELECTRIC CABLE IN CONDUIT, 600V (XLP-TYPE USE) 1/C NO. 6	FOOT	30,930	-	-	-	-	-	-	-	1,831	19,446	-	-	9,653	-	-
87800415	CONCRETE FOUNDATION, TYPE E 36-INCH DIAMETER	FOOT	99	-	-	-	-	-	-	-	39	-	-	-	60	-	-
87900200	DRILL EXISTING HANDHOLE	EACH	6	-	-	-	-	-	-	-	1	-	-	-	5	-	-
88600100	DETECTOR LOOP, TYPE I	FOOT	2,644	1,200	-	-	-	-	-	-	1,444	-	-	-	-	-	-
X0324159	WHITEWASHING FOR CONCRETE PAVEMENT	SQ YD	267,195	267,195	-	-	-	-	-	-	-	-	-	-	-	-	-

* ROADWAY IS FURTHER BROKEN DOWN AS SHOWN BELOW

CODE NUMBER	DESCRIPTION	UNIT	Roadway on Roadway Column	Drainage on Roadway Column	Structural on Roadway Column	Electrical on Roadway Column	IDOT ITS on Roadway Column	IDOT Traffic on Roadway Column	MOT on Roadway Column (TERRA)	Pavement Marking on Roadway Column (KEG)	TOTAL OF ROADWAY COLUMN FAI 74 / FAI 155
30300112	AGGREGATE SUBGRADE IMPROVEMENT 12"	SQ YD	258,244	-	-	-	-	-	8,951	-	267,195
31200500	STABILIZED SUBBASE - HOT-MIX ASPHALT, 4"	SQ YD	258,244	-	-	-	-	-	8,951	-	267,195
40600982	HOT-MIX ASPHALT SURFACE REMOVAL - BUTT JOINT	SQ YD	-	-	-	-	-	-	1,595	-	1,595
40600990	TEMPORARY RAMP	SQ YD	-	-	-	-	-	-	6,000	-	6,000
40603360	HOT-MIX ASPHALT SURFACE COURSE, MIX "E", N50	TON	-	-	-	-	-	-	-	-	-
44003100	MEDIAN REMOVAL	SQ FT	-	-	-	-	-	-	33,852	-	33,852
48101500	AGGREGATE SHOULDERS, TYPE B 6"	SQ YD	12,142	-	-	-	-	-	6,373	-	18,515
48300600	PORTLAND CEMENT CONCRETE SHOULDERS 11"	SQ YD	59,924	-	-	-	-	-	8,525	-	68,449
50800205	REINFORCEMENT BARS, EPOXY COATED	POUND	-	140	1,040	-	-	-	-	-	1,180
60107600	PIPE UNDERDRAINS 4"	FOOT	-	45,472	-	-	-	-	7,867	-	53,339
64301090	ATTENUATOR BASE	SQ YD	-	134	-	-	-	-	-	-	134
78009000	MODIFIED URETHANE PAVEMENT MARKING - LETTERS AND SYMBOLS	SQ FT	-	-	-	-	-	-	-	982	982
78009004	MODIFIED URETHANE PAVEMENT MARKING - LINE 4"	FOOT	-	-	-	-	-	-	-	143,513	143,513
78009008	MODIFIED URETHANE PAVEMENT MARKING - LINE 8"	FOOT	-	-	-	-	-	-	-	21,978.00	21,978
80400100	ELECTRIC SERVICE INSTALLATION	EACH	-	-	-	-	-	-	-	-	-
81028350	UNDERGROUND CONDUIT, PVC, 2" DIA.	FOOT	-	-	-	-	-	-	-	-	-
81028370	UNDERGROUND CONDUIT, PVC, 3" DIA.	FOOT	-	-	-	-	-	-	-	-	-
81200230	CONDUIT EMBEDDED IN STRUCTURE, 2" DIA., PVC	FOOT	-	-	-	-	-	-	-	-	-
81400200	HEAVY-DUTY HANDHOLE	EACH	-	-	-	-	-	4	-	-	4
81400700	HANDHOLE, PORTLAND CEMENT CONCRETE	EACH	-	-	-	-	-	-	-	-	-
81702130	ELECTRIC CABLE IN CONDUIT, 600V (XLP-TYPE USE) 1/C NO. 6	FOOT	-	-	-	-	-	-	-	-	-
87800415	CONCRETE FOUNDATION, TYPE E 36-INCH DIAMETER	FOOT	-	-	-	-	-	-	-	-	-
87900200	DRILL EXISTING HANDHOLE	EACH	-	-	-	-	-	-	-	-	-
88600100	DETECTOR LOOP, TYPE I	FOOT	-	-	-	-	-	1,200	-	-	1,200
X0324159	WHITEWASHING FOR CONCRETE PAVEMENT	SQ YD	258,244	-	-	-	-	-	8,951	-	267,195

FILE NAME = ...\D468620-sht-schedule_20.dgn	DESIGNED -	REVISED -
USER NAME = jreambillo	DRAWN -	REVISED -
PLOT DATE = 7/27/2012	CHECKED -	REVISED -
	DATE - JULY 20, 2012	REVISED -

benesch engineers · scientists · planners

STATE OF ILLINOIS
DEPARTMENT OF TRANSPORTATION

SCHEDULE OF SHARED PAY ITEMS

SCALE= | SHEET NO. OF SHEETS | STA. TO STA.

F.A.I. RTE.	SECTION	COUNTY	TOTAL SHEETS	SHEET NO.
*	90-(14R;14HB-4,14,14HVB)BR1	TAZEWELL	2433	700

CONTRACT NO. 68620

ILLINOIS FED. AID PROJECT

* 74 & 155