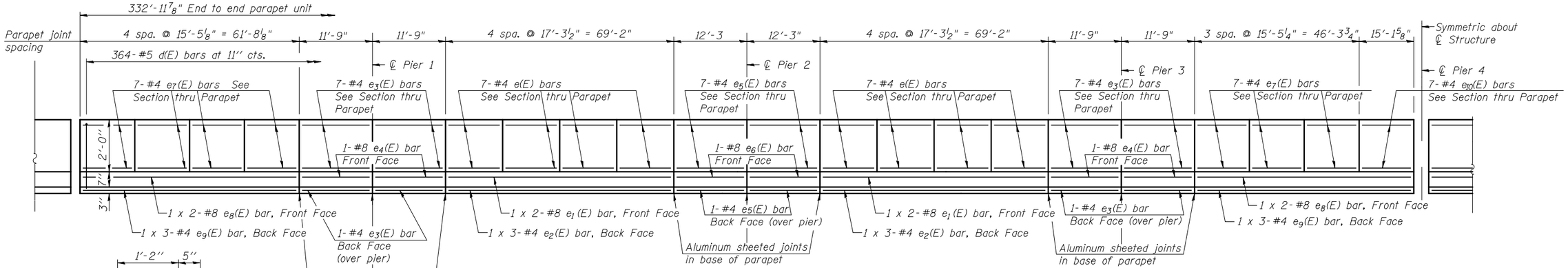

INSIDE ELEVATION OF PARAPET

(Symmetrical About ℄ of Structure)

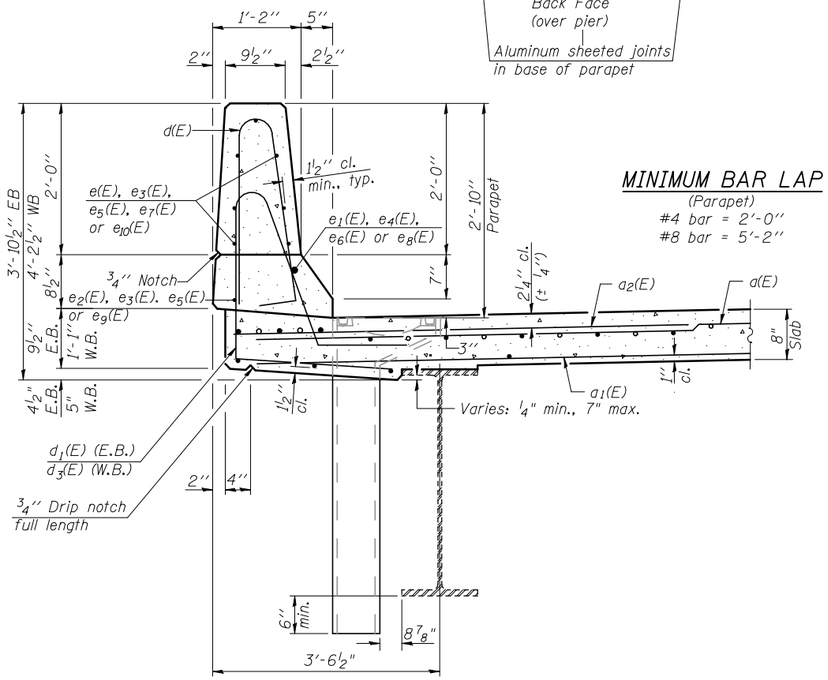

SECTION C-C

MINIMUM BAR LAP

(Parapet)
#4 bar = 2'-0"
#8 bar = 5'-2"

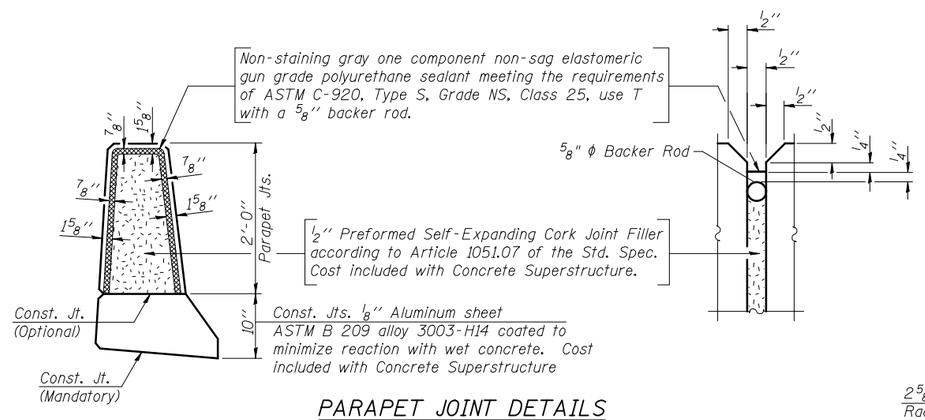

PARAPET JOINT DETAILS

TWO SUPERSTRUCTURES BILL OF MATERIAL

Bar	No.	Size	Length	Shape
a(E)	1864	#5	38'-4"	
a1(E)	1600	#5	37'-2"	
a2(E)	1864	#6	6'-6"	
a3(E)	80	#5	7'-4"	
a4(E)	4	#5	37'-4"	
a5(E)	32	#5	38'-6"	
a8(E)	1200	#4	3'-0"	
a9(E)	3030	#4	3'-6"	
a10(E)	96	#5	1'-6"	
a11(E)	60	#5	6'-4"	
b(E)	2016	#5	30'-1"	
b1(E)	320	#6	43'-9"	
b2(E)	1872	#5	28'-0"	
b3(E)	160	#6	45'-6"	
b8(E)	336	#4	27'-7"	
d(E)	2912	#5	5'-7"	
d1(E)	1456	#5	8'-3"	
d3(E)	1456	#5	8'-6"	
e(E)	448	#4	17'-0"	
e1(E)	32	#8	37'-1"	
e2(E)	48	#4	24'-4"	
e3(E)	256	#4	11'-6"	
e4(E)	32	#8	11'-6"	
e5(E)	128	#4	12'-0"	
e6(E)	16	#8	12'-0"	
e7(E)	392	#4	15'-2"	
e8(E)	32	#8	33'-4"	
e9(E)	48	#4	21'-10"	
e10(E)	56	#4	14'-10"	
x(E)	120	#5	6'-7"	
x1(E)	120	#5	7'-0"	
Reinforcement Bars, Epoxy Coated			Pound	388610
Concrete Superstructure			Cu. Yd.	1801.7

Bars indicated thus 1 x 2-#8 etc. indicates 1 line of bars with 2 lengths per line.

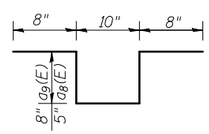

BAR a9(E) & a8(E)

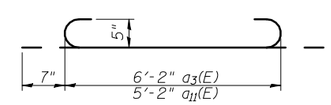

BAR a3(E) & a11(E)

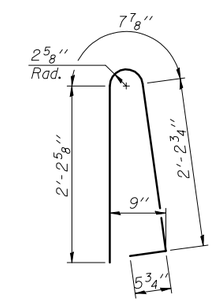

BAR d(E)

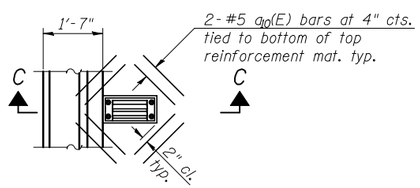

PLAN

Note:
Cut longitudinal reinforcement to clear drainage scuppers.

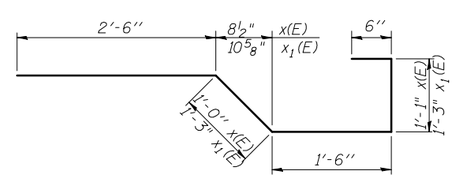

BAR x(E) & X1(E)

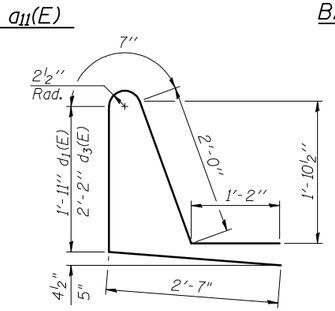

BAR d1(E) & d3(E)

BLANK, WESSELINK, COOK & ASSOCIATES DECATUR, ILLINOIS ENGINEERS - CONSULTANTS DESIGN FIRM NO. 184000894

FILE NAME =	USER NAME =	DESIGNED PBB	REVISED -
		CHECKED MCB	REVISED -
	PLOT SCALE =	DRAWN CGF	REVISED -
	PLOT DATE =	CHECKED MCB	REVISED -

STATE OF ILLINOIS
DEPARTMENT OF TRANSPORTATION

SUPERSTRUCTURE DETAILS
STRUCTURE NO. 018-0049(W.B.) & 0050(E.B.)

SHEET NO.13 OF 42 SHEETS

F.A.I. RTE.	SECTION	COUNTY	TOTAL SHEETS	SHEET NO.
70	(18-47-VB)K (18-47B, 18-47HB)BR	CUMBERLAND	147	105
		CONTRACT NO. 74466		
		ILLINOIS FED. AID PROJECT		