11-9-12 LETTING ITEM 049

F.A.S. RTE.	SECTION	COUNTY	TOTAL SHEETS	SHEET NO.
455	07-00073-00-BR	SCHUYLER	35	1
FED. ROAD DIST. NO. 7	ILLINOIS	CONTRACT NO. 93584		

STATE OF ILLINOIS
DEPARTMENT OF TRANSPORTATION
PLANS FOR PROPOSED
HIGHWAY BRIDGE PROGRAM
SCHUYLER COUNTY
SECTION 07-00073-00-BR
F.A.S. 455 (CH 2) OVER SUGAR CREEK
PROJECT NO. BRS-0455(107)
JOB NUMBER C-96-233-12

INDEX OF SHEETS

SHEET NO.	DESCRIPTION
1.	COVER SHEET
2.	GENERAL NOTES, DETAILS, TYPICAL SECTIONS
3.	SUMMARY OF QUANTITIES, SCHEDULES OF QUANTITIES
4.	TRAFFIC CONTROL PLAN
5.	STORM WATER POLLUTION PREVENTION PLAN
6.	PLAN AND PROFILE
7.-23.	STRUCTURE PLANS
24.-35.	CROSS SECTIONS

REQUIRED HIGHWAY STANDARDS

000001-06
280001-06
515001-03
630301-05
635006-03
666001-01
701301-04
701901-02
BLR 21-9
BLR 26-3
BLR 27-1

SCALES
- PLAN / PROFILE HORIZ. — 50' 0 50'
- PROFILE VERT. — 5' 0 5'
- CROSS SECTIONS HORIZ. / CROSS SECTIONS VERT. — 5' 0 5'

LOCATION OF SECTION INDICATED THUS:-

EXISTING STRUCTURE SN 085-3021
THREE SPAN POURED DECK ON STEEL BEAMS SUPERSTRUCTURE ON SPILL THRU CONCRETE ABUTMENTS AND FOOTING SUPPORTED CONCRETE PIERS, 202'-10" BK. TO BK., 24'-0" O. TO O., 14° RT. AH. SKEW (TO BE REMOVED)

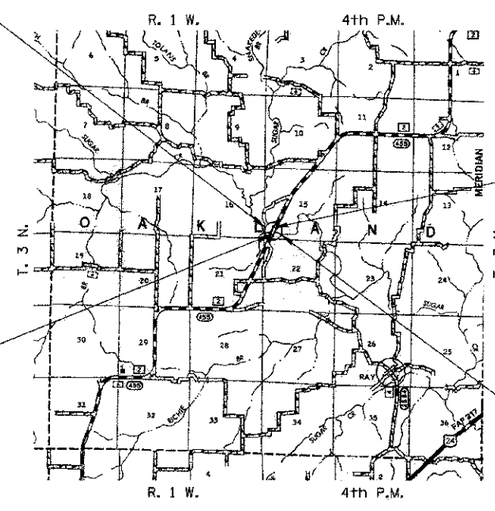

SECTION 07-00073-00-BR
ENDS
STATION 26+25.00

SECTION 07-00073-00-BR
BEGINS
STATION 16+50.00

PROPOSED STRUCTURE SN 085-3056
THREE SPAN STEEL I BM WITH REINFORCED CONCRETE DECK STRUCTURE ON CONCRETE ENCASED PILE BENT PIERS AND CONCRETE INTEGRAL ABUTMENTS, 212'-0" BK TO BK, AND 26'-0" O TO O DECK, 15° SKEW RT. AH.

LOCATION MAP

1 MI 0 1 MI
APPROXIMATE SCALE

UTILITY COMPANIES

SOUTH FULTON WATER DISTRICT
ASTORIA, ILLINOIS

J.U.L.I.E.
JOINT UTILITY LOCATION INFORMATION FOR EXCAVATION
1-800-892-0123
OR 811

NET LENGTH OF PROJECT = 975.00 FEET = 0.185 MILES
DESIGN CLASSIFICATION: MAJOR COLLECTOR (NON-URBAN)
DESIGN ADT: 290 (2012)
DESIGN SPEED: 40 MPH

Hutchison Engineering, Inc.
JACKSONVILLE-SHOREWOOD-PEORIA
2012 JOB#2990

JEFFREY S. HUTCHISON 062-057391 REGISTERED PROFESSIONAL ENGINEER OF ILLINOIS
Lic Exp 11/30/2012
SIGNATURE
ENGINEERS SEAL

APPROVED 7-26 2012
David L. Schneider
SCHUYLER COUNTY ENGINEER

PASSED August 27 2012
Terrence Fortman
DISTRICT SIX ENGINEER OF LOCAL ROADS & STREETS

PASSED August 27 2012
Ron Buchanan
DISTRICT SIX ENGINEER OF CONSTRUCTION

Released For Bid Based on Limited Review August 27 2012
Roger Driskell
DEPUTY DIRECTOR OF HIGHWAYS, REGION FOUR ENGINEER

STATE OF ILLINOIS
DEPARTMENT OF TRANSPORTATION

CONTRACT NO. 93584

2990E001

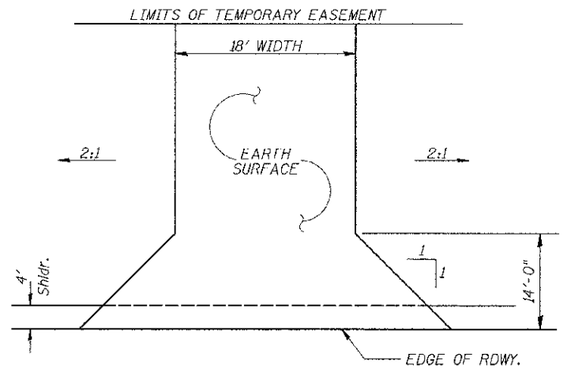

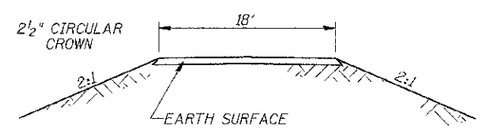

FIELD ENTRANCES

STA 24+16 RT

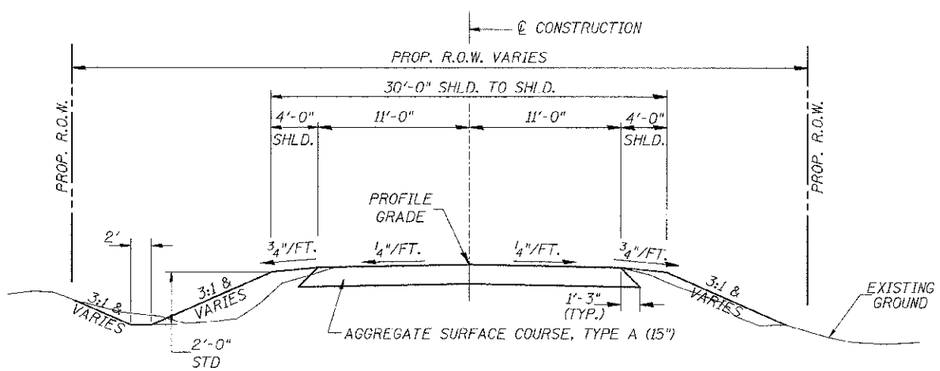

CONSTRUCT GUARDRAIL SHOULDER WIDENING IN ACCORDANCE WITH STD 630301

PROPOSED TYPICAL SECTION

STA. 16+50.00 TO STA. 18+94.00
STA. 21+06.00 TO STA. 26+25.00
EXCEPT TRANSITIONS

BRIDGE OMISSION
STA. 18+94.00 TO STA. 21+06.00

GENERAL NOTES

PLAN QUANTITIES FOR TREE REMOVAL HAVE BEEN BASED ON ALL TREES WITHIN THE PROPOSED RIGHT OF WAY. THIS QUANTITY MAY BE REVISED DURING CONSTRUCTION, AT THE DIRECTION OF THE ENGINEER, BY DELETING FROM THE TREE REMOVAL QUANTITIES, SUCH TREES THAT DO NOT INTERFERE WITH THE PROPOSED CONSTRUCTION.

THE REMOVAL OF EXISTING OIL & CHIP SURFACE AND GRAVEL OR CRUSHED STONE BASE COURSE WHICH MAY BE NECESSARY FOR THE CONSTRUCTION OF THE NEW BRIDGE SHALL BE REMOVED AS EARTH EXCAVATION AND NO COMPENSATION WILL BE ALLOWED FOR ADDITIONAL LABOR OR EQUIPMENT REQUIRED.

ALL WASTE OR UNDESIRABLE MATERIAL AS IDENTIFIED BY THE ENGINEER SHALL BE DISPOSED OF OUTSIDE THE LIMITS OF THE RIGHT OF WAY AT THE CONTRACTOR'S EXPENSE.

ALL EXISTING PRIVATELY OWNED UTILITIES REQUIRING ADJUSTMENT WILL BE MADE BY THE UTILITY COMPANY INVOLVED. WHERE NO PROVISIONS HAVE BEEN MADE FOR ADJUSTMENTS ON THE PLANS, NO ADDITIONAL COMPENSATION WILL BE ALLOWED DUE TO DELAYS OR INCONVENIENCES CAUSED BY THE SAID UTILITY ADJUSTMENTS.

ALL EXISTING DRAINAGE STRUCTURES NOT BEING REMOVED BY THE CONTRACTOR THAT ARE DAMAGED DURING CONSTRUCTION SHALL BE REPLACED AT THE CONTRACTOR'S EXPENSE.

THE PROFILE GRADE ELEVATIONS SHOWN ON THE PLAN AND PROFILE SHEETS AND IN THE STATION CROSS SECTIONS ARE TO THE TOP OF THE FINISHED SURFACE.

ANY REFFRENCE TO STANDARDS THROUGHOUT THE PLANS SHALL BE INTERPRETED TO BE THE LATEST STANDARDS OF THE ILLINOIS DEPARTMENT OF TRANSPORTATION

THE LOCATION OF UNDERGROUND UTILITIES SHOWN ON THE PLANS REPRESENTS THE BEST KNOWLEDGE OF THE COUNTY. IT SHALL BE THE CONTRACTOR'S RESPONSIBILITY TO VERIFY LOCATIONS OF UNDERGROUND INSTALLATIONS BEFORE STARTING CONSTRUCTION OPERATIONS. THE CONTRACTOR SHALL INDEMNIFY THE COUNTY, ITS OFFICERS AND EMPLOYEES AGAINST ALL CLAIMS DUE TO DAMAGE TO CORPORATE OR PRIVATE PROPERTY RESULTING FROM HIS CONSTRUCTION OPERATIONS AS DESCRIBED IN ARTICLES 107.20 AND 107.26 OF THE STANDARD SPECIFICATIONS.

THE CONTRACTOR MAY BE REQUIRED TO CONDUCT SOME OF HIS GRADING AND TRENCHING OPERATIONS AROUND TRANSMISSION POLES AND UNDER TRANSMISSION LINES. THE ADDED COST OF SO DOING SHALL BE INCLUDED IN THE COST OF EARTH EXCAVATION.

WHERE SECTION OR SUBSECTION MONUMENTS ARE ENCOUNTERED, THE ENGINEER SHALL BE NOTIFIED BEFORE SUCH MONUMENTS ARE REMOVED. THE CONTRACTOR SHALL PROTECT AND PRESERVE PROPERTY MARKERS UNTIL THE OWNER, AN AUTHORIZED SURVEYOR, OR AGENT, HAS WITNESSED OR OTHERWISE REFERENCED THEIR LOCATION.

ALL ELEVATIONS SHOWN REFER TO AN U.S.G.S. MEAN SEA LEVEL DATUM.

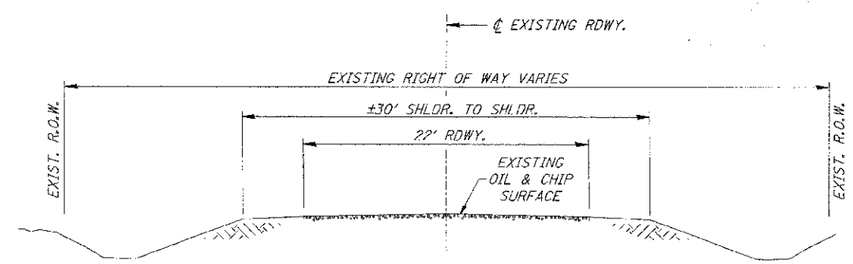

EXISTING TYPICAL SECTION

FILE NAME =	USER NAME = othomas	DESIGNED -	REVISED -	SCHYULER COUNTY COUNTY HIGHWAY 2 OVER SUGAR CREEK	GENERAL NOTES, DETAILS, TYPICAL SECTIONS	F.A.S. RTE.	SECTION	COUNTY	TOTAL SHEETS	SHEET NO.
V:\Bridge\2998 - Schuyler\2998ti02t.dgn		DRAWN -	REVISED -			455	07-00073-00-BR	SCHYULER	35	2
	PLOT SCALE = 1.0000 ' / in.	CHECKED -	REVISED -					CONTRACT NO. 93584		
	PLOT DATE = 7/24/2012	DATE -	REVISED -		SCALE: NONE / SHEET NO. 1 OF 1 SHEETS / STA. 16+50.00 TO STA. 26+25.00	FED. ROAD DIST. NO. 7	ILLINOIS	FED. AID PROJECT NO. BRS-0455(107)		

SUMMARY OF QUANTITIES

	CODE NO.	ITEM	UNIT	QUANTITY
	20100110	TREE REMOVAL (6 TO 15 UNITS DIAMETER)	UNIT	483
	20100210	TREE REMOVAL (OVER 15 UNITS DIAMETER)	UNIT	194
	20200100	EARTH EXCAVATION	CU YD	1,135
	20300100	CHANNEL EXCAVATION	CU YD	540
	20400800	FURNISHED EXCAVATION	CU YD	2,450
①	20900110	POROUS GRANULAR BACKFILL	CU YD	95
①	28000250	TEMPORARY EROSION CONTROL SEEDING	POUND	1,500
	28000305	TEMPORARY DITCH CHECKS	FOOT	252
	28000400	PERIMETER EROSION BARRIER	FOOT	1,270
	28100209	STONE RIPRAP, CLASS A5	TON	1,190
	28200200	FILTER FABRIC	SQ YD	1,360
	28300400	AGGREGATE DITCH	TON	295
	40200100	AGGREGATE SURFACE COURSE, TYPE A	TON	1,555
①	50100100	REMOVAL OF EXISTING STRUCTURES	EACH	1
	50200100	STRUCTURE EXCAVATION	CU YD	85
	50200300	COFFERDAM EXCAVATION	CU YD	85
①	50201101	COFFERDAM (TYPE 1) (LOCATION-1)	EACH	1
①	50201102	COFFERDAM (TYPE 1) (LOCATION-2)	EACH	1
	50300225	CONCRETE STRUCTURES	CU YD	152.5
	50300255	CONCRETE SUPERSTRUCTURE	CU YD	170.1
	50300260	BRIDGE DECK GROOVING	SQ YD	565
	50300280	CONCRETE ENCASEMENT	CU YD	20.9
	50300300	PROTECTIVE COAT	SQ YD	680
	50500105	FURNISHING AND ERECTING STRUCTURAL STEEL	L SUM	1
	50500505	STUD SHEAR CONNECTORS	EACH	3,120
	50800205	REINFORCEMENT BARS, EPOXY COATED	POUND	56,730
△	50900205	STEEL RAILING, TYPE S1	FOOT	424
	51201400	FURNISHING STEEL PILES HP10x42	FOOT	246
	51201610	FURNISHING STEEL PILES HP12x63	FOOT	558
	51202305	DRIVING PILES	FOOT	246
	51203400	TEST PILE STEEL HP10x42	EACH	2
	51500100	NAME PLATES	EACH	1
	52100520	ANCHOR BOLTS, 1"	EACH	40
	59100100	GEOCOMPOSITE WALL DRAIN	SQ YD	53
△	63100075	TRAFFIC BARRIER TERMINAL, TYPE 5A	EACH	2
△	63100167	TRAFFIC BARRIER TERMINAL, TYPE 1 (SPECIAL) TANGENT	EACH	2
	63200310	GUARDRAIL REMOVAL	FOOT	408
	66600105	FURNISHING AND ERECTING RIGHT OF WAY MARKERS	EACH	10
	67100100	MOBILIZATION	L SUM	1
△ ①	78201000	TERMINAL MARKER - DIRECT APPLIED	EACH	4
①	X2501000	SEEDING, CLASS 2 (SPECIAL)	ACRE	1.9
①	X7010216	TRAFFIC CONTROL AND PROTECTION (SPECIAL)	L SUM	1
①	Z0046304	PIPE UNDERDRAINS FOR STRUCTURES 4"	FOOT	104
①	Z0065000	SETTING PILES IN ROCK	EACH	12
①	Z0013798	CONSTRUCTION LAYOUT	L SUM	1

△ SPECIALTY ITEMS

CONSTRUCTION TYPE CODE: 0011

BRIDGE TYPE: X071

TRAFFIC BARRIER TERMINAL, TYPE 5A

SIDE	STATION TO STATION	EACH
RIGHT	18+84.23 - 18+97.48	1
LEFT	21+02.52 - 21+15.77	1
	TOTAL	2

TRAFFIC BARRIER TERMINAL, TYPE 1 (SPECIAL) TANGENT

SIDE	STATION TO STATION	EACH
RIGHT	18+34.23 - 18+84.23	1
LEFT	21+15.77 - 21+65.77	1
	TOTAL	2

PERIMETER EROSION BARRIER

STATION TO STATION	SIDE	FOOT
16+50 - 16+73	RIGHT	30
18+75 - 18+88	LEFT	55
21+00 - 26+25	LEFT	555
21+12 - 26+25	RIGHT	630
	TOTAL	1,270

GUARDRAIL REMOVAL

STATION TO STATION	SIDE	FOOT
17+94 - 18+96	LEFT	102
18+00 - 19+02	RIGHT	102
20+98 - 22+00	LEFT	102
21+04 - 22+06	RIGHT	102
	TOTAL	408

TEMPORARY DITCH CHECKS

STATION	SIDE	FOOT
17+80	RIGHT	12
17+90	RIGHT	12
18+00	RIGHT	12
18+05	LEFT	12
18+10	RIGHT	12
18+15	LEFT	12
18+20	RIGHT	12
18+25	LEFT	12
18+30	RIGHT	12
18+35	LEFT	12
18+40	RIGHT	12
18+45	LEFT	12
18+50	RIGHT	12
18+55	LEFT	12
18+60	RIGHT	12
18+65	LEFT	12
18+70	RIGHT	12
18+75	LEFT	12
18+80	RIGHT	12
18+90	RIGHT	12
19+00	RIGHT	12
	TOTAL	252

FURNISHING AND ERECTING RIGHT OF WAY MARKERS

STATION	OFFSET	SIDE	EACH
17+75.0	60'	RIGHT	1
18+00.0	65'	LEFT	1
18+00.0	85'	RIGHT	1
18+25.0	75'	LEFT	1
18+50.0	85'	RIGHT	1
18+75.0	75'	LEFT	1
19+00.0	60'	RIGHT	1
19+00.0	65'	LEFT	1
22+25.0	60'	RIGHT	1
22+25.0	50'	RIGHT	1
		TOTAL	10

TREE REMOVAL

STATION	OFFSET	SIDE	6 TO 15 UNITS	OVER 15 UNITS
16+32	57'	LEFT	12	
16+44	59'	LEFT	8	
16+49	55'	LEFT	10	
16+55	58'	LEFT	12	
16+60	53'	LEFT	8	
16+61	57'	LEFT	13	
16+70	61'	LEFT	12	
16+80	62'	LEFT	14	
16+82	58'	LEFT	14	
17+07	46'	LEFT	12	
17+63	49'	RIGHT	14	
18+11	55'	RIGHT	14	
18+15	40'	LEFT		16
18+33	77'	RIGHT		20
18+36	54'	LEFT	12	
18+37	30'	RIGHT	8	
18+40	30'	RIGHT	6	
18+46	63'	LEFT	10	
18+50	50'	LEFT	7	
18+56	51'	RIGHT	9	
18+57	61'	LEFT	7	
18+66	48'	LEFT	15	
18+79	63'	RIGHT	6	
18+80	55'	LEFT	12	
19+21	42'	RIGHT	6	
19+23	63'	LEFT	15	
19+25	56'	LEFT	15	
19+40	30'	RIGHT	8	
19+46	43'	RIGHT	12	
19+58	53'	RIGHT	12	
20+13	62'	LEFT		26
20+35	38'	RIGHT	10	
20+43	43'	RIGHT	8	
20+49	45'	LEFT	12	
20+49	45'	LEFT	14	
20+49	45'	LEFT		16
20+49	45'	LEFT		24
20+49	45'	LEFT		24
20+50	40'	RIGHT	8	
20+79	60'	LEFT		20
20+79	54'	LEFT	10	
20+95	56'	RIGHT	10	
20+98	56'	RIGHT	8	
21+09	49'	RIGHT	14	
21+41	50'	LEFT		16
21+68	49'	LEFT		16
22+33	49'	LEFT	6	
22+33	49'	LEFT	13	
22+57	45'	LEFT	6	
22+57	45'	LEFT	6	
22+57	45'	LEFT		16
22+93	54'	LEFT	8	
22+93	54'	LEFT	6	
22+93	54'	LEFT	6	
23+11	56'	LEFT	9	
23+11	56'	LEFT	9	
23+11	56'	LEFT	6	
24+32	48'	RIGHT	11	
		TOTAL	483	194

EARTHWORK SUMMARY

STATION TO STATION	EARTH EXCAVATION	CHANNEL EXCAVATION	STRUCTURE EXCAVATION	COFFERDAM EXCAVATION	FILL	WASTE (SHORTAGE)
	CU YD	CU YD	CU YD	CU YD	CU YD	CU YD
RDWY 16+50.00 - 18+94.00	1,030				773	(1)
RDWY 21+06.00 - 26+25.00	103				2,526	(2,449)
CHANNEL		540				
STRUCTURE			85			
COFFERDAM				85		
TOTAL	1,133	540	85	85	3,299	(2,450)
USE	1,135	540	85	85	-	(2,450)

(@ 25% SHRINKAGE)

AGGREGATE SURFACE COURSE, TYPE A

STATION TO STATION	THICKNESS	WIDTH	LENGTH	TON
16+50.00 - 17+00.00	1.25'	23.48' AVG.	50.00'	103
17+00.00 - 18+94.00	1.25'	23.25'	194.00'	395
21+06.00 - 25+75.00	1.25'	23.25'	469.00'	954
25+75.00 - 26+25.00	1.25'	23.59' AVG.	50.00'	103
			TOTAL	1,555

AGGREGATE DITCH**

STATION TO STATION	SIDE	WIDTH	TON	FILTER FABRIC (SQ YD)
16+50 - 18+75	LEFT	8'	148	215
16+73 - 19+00	RIGHT	8'	147	210
		TOTAL	295	425

** Aggregate Ditch shall conform to material type A-4 of the Standard Specifications.

The thickness of the aggregate bed shall be a minimum of 16".

FILE NAME = V:\Bridge\2990 - Schuyler\2990q08l.dgn	USER NAME = athomas	DESIGNED -	REVISED -	SCHUYLER COUNTY COUNTY HIGHWAY 2 OVER SUGAR CREEK	SUMMARY OF QUANTITIES, & SCHEDULES OF QUANTITIES	F.A.S. RTE.	SECTION	COUNTY	TOTAL SHEETS	SHEET NO.
		DRAWN -	REVISED -			455	07-00073-00-BR	SCHUYLER	35	3
	PLOT SCALE = 1:000 ' / in.	CHECKED -	REVISED -					CONTRACT NO. 93584		
	PLOT DATE = 7/25/2012	DATE -	REVISED -		SCALE: NONE / SHEET NO. 1 OF 1 SHEETS / STA. 16+50.00 TO STA. 26+25.00	FED. ROAD DIST. NO. 7	ILLINOIS	FED. AID PROJECT NO. BRS-0455(107)		

R 1 W, 4TH PM

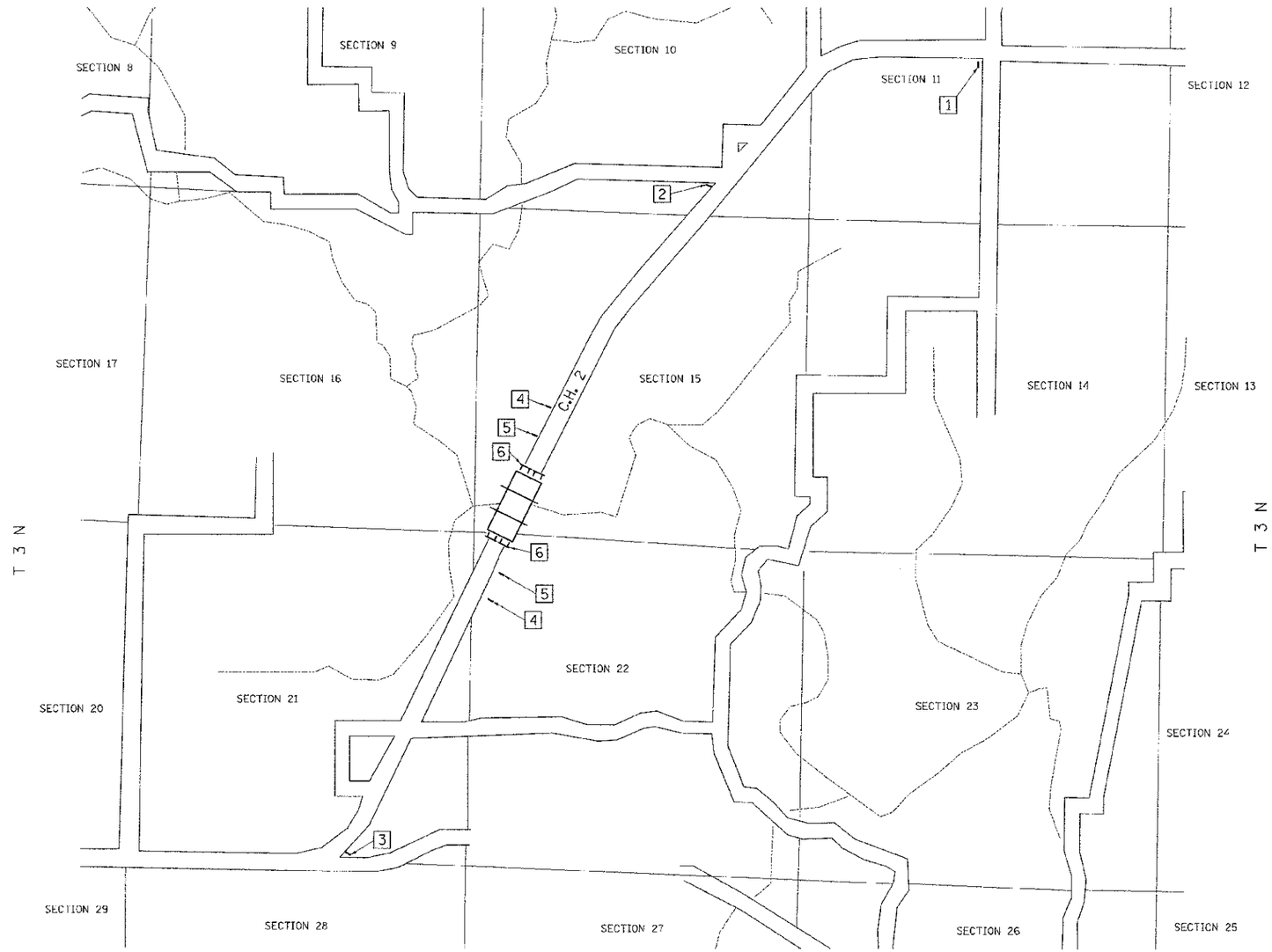

R 1 W, 4TH PM

1	ROAD CLOSED 2 MILES AHEAD LOCAL TRAFFIC ONLY R11-3	ROAD CLOSED 2 MILES AHEAD LOCAL TRAFFIC ONLY
2	ROAD CLOSED 1 1/4 MILES AHEAD LOCAL TRAFFIC ONLY R11-3	ROAD CLOSED 1 1/4 MILES AHEAD LOCAL TRAFFIC ONLY
3	ROAD CLOSED 1 MILE AHEAD LOCAL TRAFFIC ONLY R11-3	ROAD CLOSED 1 MILE AHEAD LOCAL TRAFFIC ONLY
4	ROAD CLOSED AHEAD W20-3	ROAD CLOSED AHEAD
5	ROAD CLOSED 500 FT W20-3	ROAD CLOSED 500 FT
6		TYPE III BARRICADES

SEE STANDARD BLR 21
AND SPECIAL PROVISIONS

1/3 MI 0 1/3 MI

GRAPHIC SCALE IN MILES

FILE NAME = V:\Bridge\2000 - Schuyler\2998h001.dgn	USER NAME = dthomas	DESIGNED -	REVISED -	SCHUYLER COUNTY COUNTY HIGHWAY 2 OVER SUGAR CREEK	TRAFFIC CONTROL PLAN			F.A.S. RTE.	SECTION	COUNTY	TOTAL SHEETS / SHEET NO.
		DRAWN -	REVISED -					455	07-00073-00-BR	SCHUYLER	35 / 4
	PLOT SCALE = 1.0000 ' / in.	CHECKED -	REVISED -							CONTRACT NO. 93584	
	PLOT DATE = 7/24/2012	DATE - 03/02/09	REVISED -		SCALE: NONE	SHEET NO. 1 OF 1 SHEETS	STA. 16+50.00 TO STA. 26+25.00	FED. ROAD DIST. NO. 7	ILLINOIS	FED. AID PROJECT BRS-0455(107)	

T 3 N, R 1 W, 4TH PM
SECTION 15

LEGEND

- PERIMETER EROSION BARRIER
- TEMPORARY DITCH CHECK
- SPECIAL DITCH - FLOW LINE AND DIRECTION
- PROPOSED RIPRAP/AGGREGATE DITCH PLACEMENT

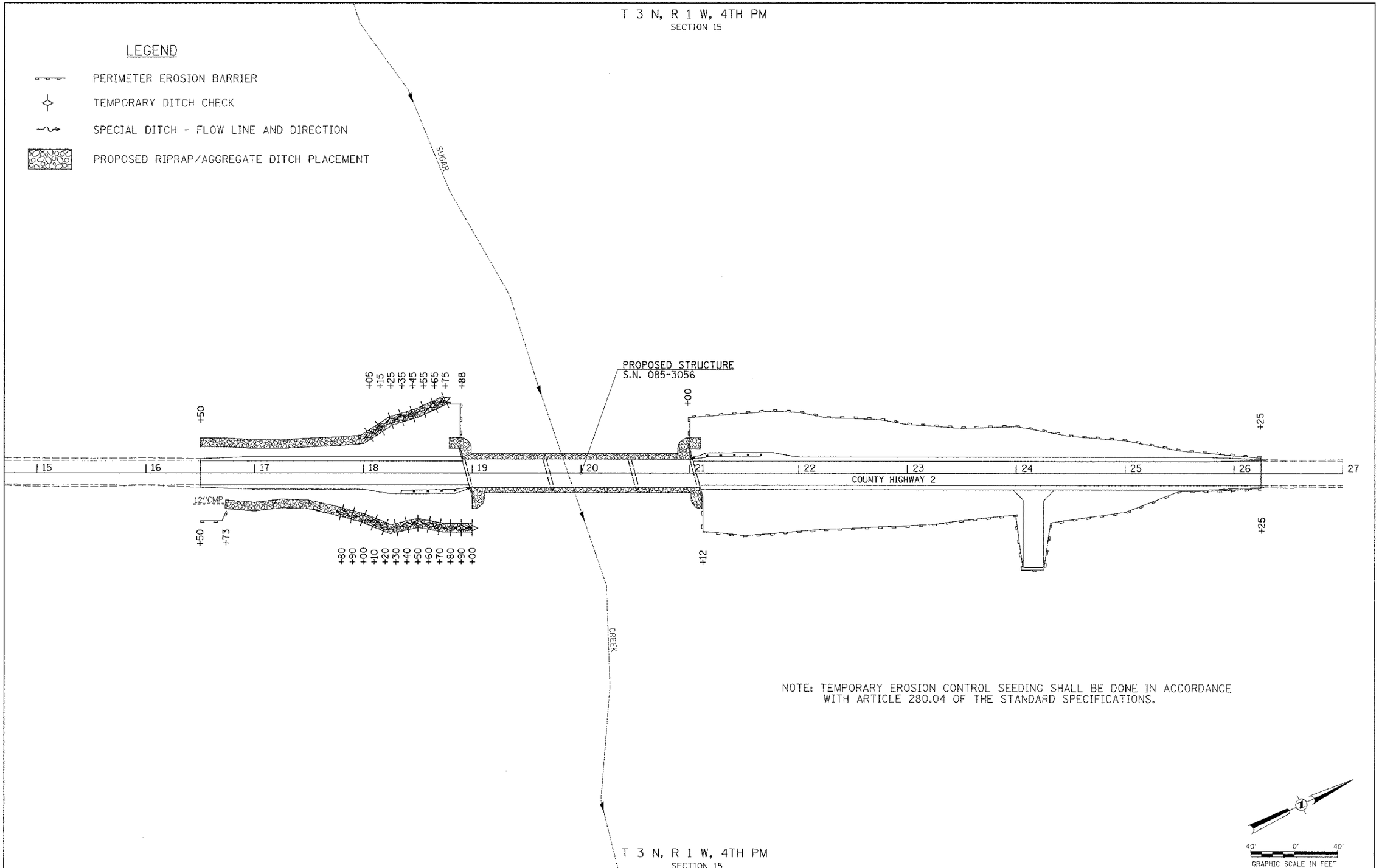

NOTE: TEMPORARY EROSION CONTROL SEEDING SHALL BE DONE IN ACCORDANCE WITH ARTICLE 280.04 OF THE STANDARD SPECIFICATIONS.

FILE NAME = V:\Bridge\2990 - Schuyler\2990S001.dgn	USER NAME = cthomas	DESIGNED -	REVISED -	SCHUYLER COUNTY COUNTY HIGHWAY 2 OVER SUGAR CREEK	STORM WATER POLLUTION PREVENTION PLAN	F.A.S. RTE.	SECTION	COUNTY	TOTAL SHEETS / SHEET NO.
		DRAWN -	REVISED -			455	07-00073-00-BR	SCHUYLER	35 / 5
	PLOT SCALE = 40.0000 ' / in.	CHECKED -	REVISED -					CONTRACT NO. 93584	
	PLOT DATE = 7/24/2012	DATE -	REVISED -		SCALE: 1" = 40' / SHEET NO. 1 OF 1 SHEETS / STA. 16+50.00 TO STA. 26+25.00	FED. ROAD DIST. NO. 7	ILLINOIS	FED. AID PROJECT BRS-0455(107)	

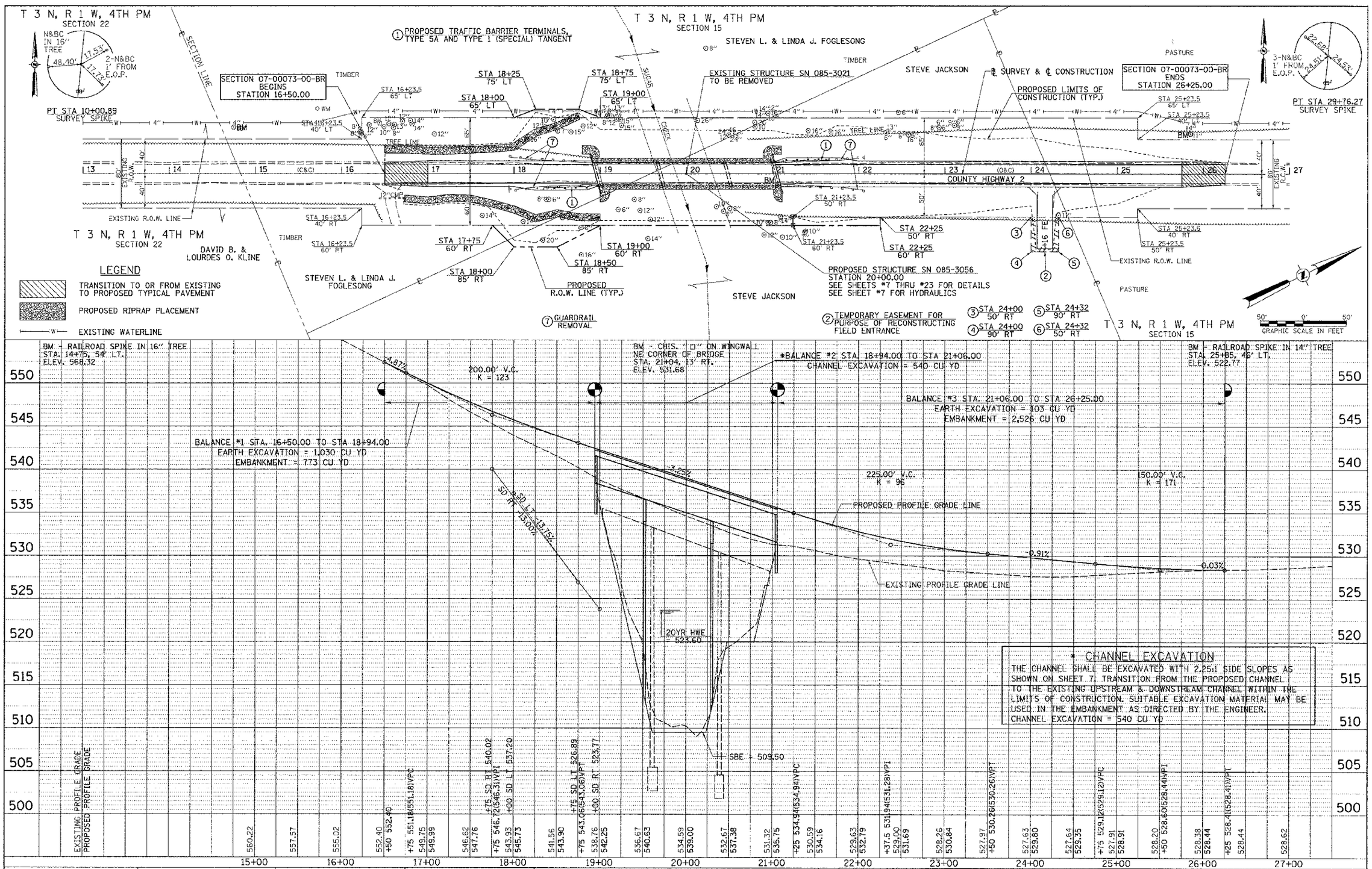

FILE NAME = V:\Bridge\2990 - Schuyler\2990p001.dgn	USER NAME = athomas	DESIGNED -	REVISED -
		DRAWN -	REVISED -
	PLOT SCALE = 50.0000 ' / in.	CHECKED -	REVISED -
	PLOT DATE = 7/24/2012	DATE -	REVISED -

SCHUYLER COUNTY
COUNTY HIGHWAY 2
OVER SUGAR CREEK

PLAN AND PROFILE

SCALE: 1"=50' | SHEET NO. 1 OF 1 SHEETS | STA. 16+50.00 TO STA. 26+25.00

F.A.S. RTE.	SECTION	COUNTY	TOTAL SHEETS	SHEET NO.
455	07-00073-00-BR	SCHUYLER	35	6

CONTRACT NO. 93584

FED. ROAD DIST. NO. 7 ILLINOIS FED. AID PROJECT BRS-0455(107)

B.M.: RR Spike in 16" Tree
Sta. 14+75, 54' Lt.
Elev. 568.32

RR Spike in 14" Tree
Sta. 25+85, 46' Lt.
Elev. 522.77

Existing Structure:
Three span poured deck on steel beams superstructure. The substructure consists of concrete spill thru abutments on piles and footing supported solid wall piers. The structure is 202'-10" back to back of abutments, 24'-0" out to out deck, and skewed ±14° Rt. Ah. Str. No. 085-3021 built 1951.

Salvage: None

Road to be closed to traffic during construction.

SUGAR CREEK
BUILT 201_ BY
SCHUYLER COUNTY
SEC. 07-00073-00-BR
C.H. 2 STATION 20+00.00
F.A. PROJ. BRS-0455(107)
STR. NO. 085-3056 LOADING HL-93

NAME PLATE

Locate Name Plate at S.E. Wingwall Corner of Bridge (See Std. 515001)

BRIDGE PLANS INDEX TO SHEETS

SHEET #'s	DESCRIPTION
1	General Plan
2	General Notes, Bill of Materials & Footing Plan
3-5	Top of Slab Elevations
6	Superstructure
7	Superstructure Details
8	Diaphragm Details
9	Steel Railing, Type S-1
10	Framing Plan and Details
11	Structural Steel Details
12	Bearing Details
13	South Abutment
14	North Abutment
15	Pier #1
16	Pier #2
17	HP Pile Details

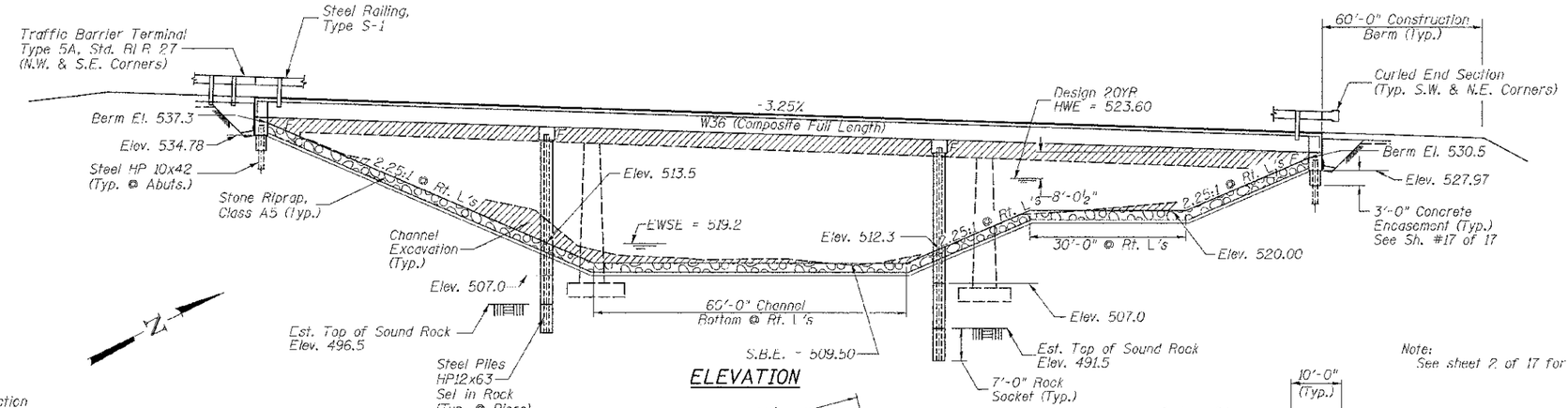

ELEVATION

Note:
See sheet 2 of 17 for Section A-A.

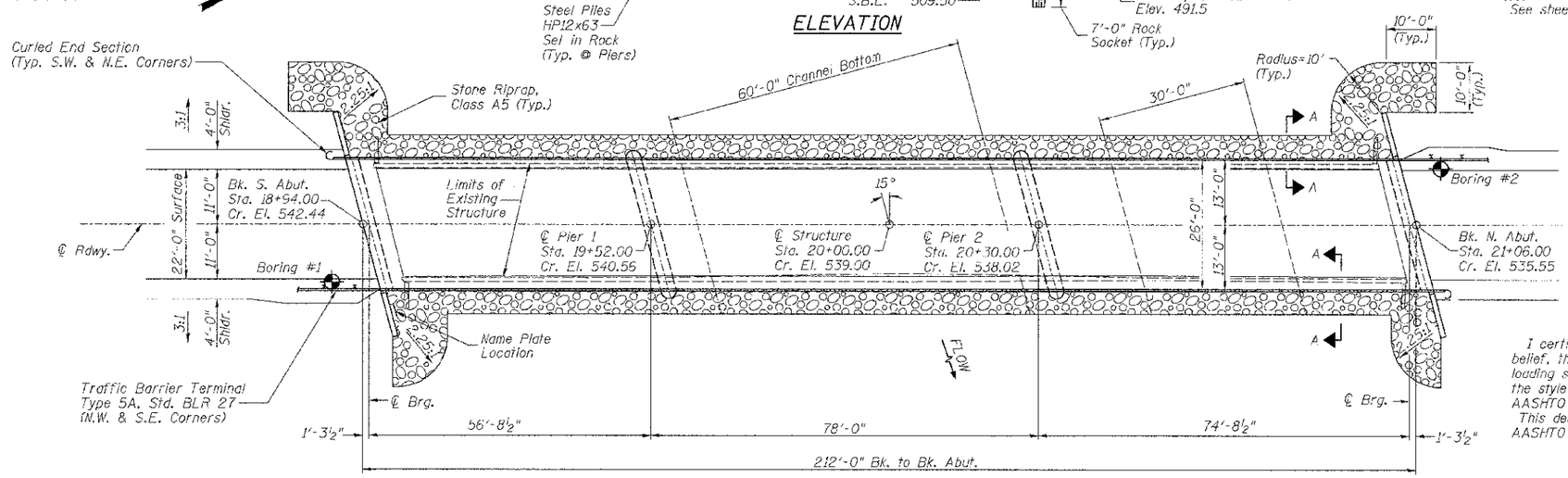

PLAN

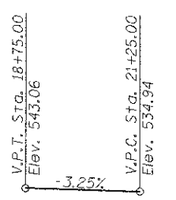

PROFILE GRADE

(CH 2)

I certify that to the best of my knowledge, information and belief, this bridge design is structurally adequate for the design loading shown on the plans. The design is an economical one for the style of structure and complies with requirements of the current AASHTO Standard Specification for Highway Bridges.
This design complies with all requirements of the current AASHTO Guide Specifications for Seismic Design of highway bridges.

7/25/2012
Illinois Structural No. 6527
Expires 11/30/2012

BENJAMIN A. NEBEL
062-006527
LICENSED
STRUCTURAL ENGINEER
OF
ILLINOIS

Lic. Exp. 11/30/2012

DESIGN SCOUR TABLE

Location	S. Abut	Pier 1	Pier 2	N. Abut
Design Scour Elevation	534.18	508.10	506.90	521.91

WATERWAY INFORMATION

Drainage Area = 79.91 Sq. Mi. Low Grade Elev. = 528.41 @ Sta. 26+25.00

Flood	Freq. Yr.	Q C.F.S.	Opening Sq. Ft. Exist.	Opening Sq. Ft. Prop.	Nat. H.W.E.	Head - Ft. Exist.	Head - Ft. Prop.	Headwater El. Exist.	Headwater El. Prop.
Design	20	6,940	1,144	1,354	523.60	0.74	0.69	524.34	524.29
Base	100	9,965	1,293	1,512	524.64	1.42	1.28	526.06	525.92

Construction of this project complies with IDNR, Office of Water Resources Statewide Permit No. 2

DESIGN SPECIFICATIONS

2012 AASHTO LRFD Bridge Design Specifications, 6th Edition

DESIGN STRESSES

(FIELD UNITS)

f'c = 3,500 psi
fy = 60,000 psi (Reinforcement)
fy = 50,000 psi (M270 Grade 50W)

LOADING HL-93

Allow 50#/sq. ft. for future wearing surface.

SEISMIC DATA

Seismic Performance Zone (SPZ) = 1
Design Spectral Acceleration at 1.0 sec. (S_{D1}) = 0.12g
Design Spectral Acceleration at 0.2 sec. (S_{DS}) = 0.19g
Soil Site Class = D

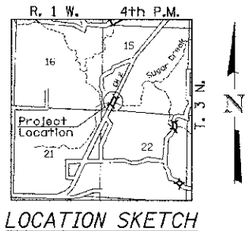

LOCATION SKETCH

DESIGNED	S.T.M
CHECKED	B.A.N.
DRAWN	S.T.M.
CHECKED	B.A.N.

GENERAL PLAN
C.H. 2 OVER SUGAR CREEK
SECTION 07-00073-00-BR
SCHUYLER COUNTY
STATION 20+00.00
STRUCTURE NO. 085-3056

SHEET NO. 1	ROUTE NO.	SECTION	COUNTY	TOTAL SHEETS	SHEET NO.
17 SHEETS	CH 2	07-00073-00-BR	SCHUYLER	35	7
	SN 085-3056		CONTRACT NO. 93584		
	FED. ROAD DIST. NO. 7	ILLINOIS	FED. AID PROJECT BRS-0455(107)		

2990b001

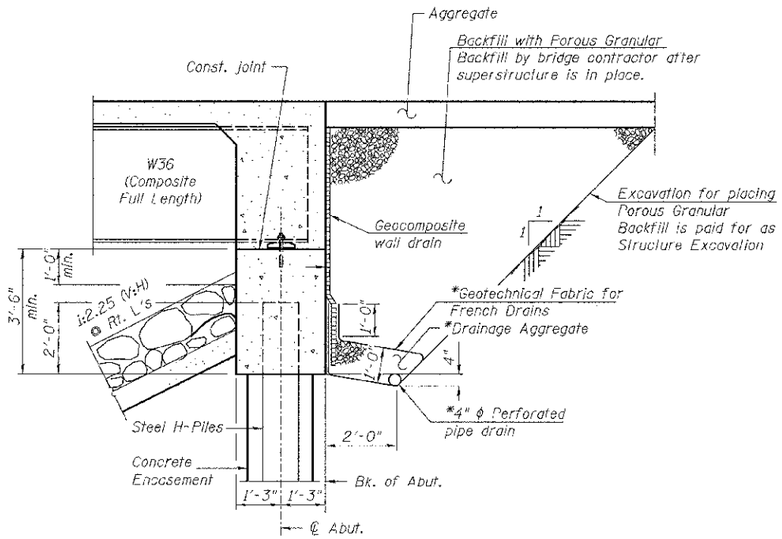

*Included in the cost of Pipe Underdrains for Structures.

Note:

All drainage system components shall extend to 2'-0" from the end of each wingwall except an outlet pipe shall extend until intersecting with the side slopes. The pipes shall drain into *concrete headwalls. (See Article 601.05 of the Standard Specifications and Highway Standard 601101)

SECTION THRU INTEGRAL ABUTMENT

(At Right Angles)

GENERAL NOTES

The Contractor shall drive test piles to 110% of the nominal required bearing specified in production locations at the substructures specified or approved by the Engineer before ordering the remainder of the piles.

All structural steel shall be AASHTO M 270 Grade 50W.

Calculated weight of Structural Steel = 163,860 lbs. (AASHTO M270, Grade 50W).

Fasteners shall be AASHTO M164 Type 1, mechanically galvanized bolts (in painted areas and M164 Type 3 in unpainted areas). Bolts 7/8 in. ϕ, holes 15/16 in. ϕ, unless otherwise noted.

No field welding is permitted except as specified in the contract documents.

Reinforcement bars designated (E) shall be epoxy coated.

Structural steel shall only be painted for a distance equal to the depth of embedment into the concrete cap plus 3 inches. Painted areas shall be primed in the shop with a Department approved zinc rich primer. Field painting will not be required.

Layout of slope protection system may be varied in the field to suit ground conditions as directed by the engineer.

The existing structural steel coating contains lead. The Contractor shall take appropriate precautions to deal with the presence of lead on this project.

Bearing seat surfaces shall be constructed or adjusted to the designated elevations within a tolerance of 1/8 inch (0.01 ft.). Adjustment shall be made either by grinding the surface or by shimming the bearings.

Protective coat shall be applied to the top and sides of the deck.

For Soil Boring Logs, See Special Provisions.

The embankment configuration shown shall be the minimum that must be placed and compacted prior to construction of the abutments.

TOTAL BILL OF MATERIAL

	ITEM	UNIT	SUPER	SUB	TOTAL
	Channel Excavation	CU YD	——	540	540
①	Porous Granular Backfill	CU YD	——	95	95
	Stone Riprap, Class A5	TON	——	1,190	1,190
	Filter Fabric	SQ YD	——	935	935
①	Removal of Existing Structures	EACH	——	——	1
	Structure Excavation	CU YD	——	85	85
	Cofferdam Excavation	CU YD	——	85	85
①	Cofferdam (Type 1) (Location-1) Pier #1	EACH	——	1	1
①	Cofferdam (Type 1) (Location-2) Pier #2	EACH	——	1	1
	Concrete Structures	CU YD	——	152.5	152.5
	Concrete Superstructure	CU YD	170.1	——	170.1
	Bridge Deck Grooving	SQ YD	565	——	565
	Concrete Encasement	CU YD	——	20.9	20.9
	Protective Coat	SQ YD	680	——	680
	Furnishing and Erecting Structural Steel	L SUM	1	——	1
	Stud Shear Connectors	EACH	3,120	——	3,120
	Reinforcement Bars, Epoxy Coated	POUND	43,110	13,620	56,730
	Steel Railing, Type S-1	FOOT	424	——	424
	Furnishing Steel Piles HP10x42	FOOT	——	246	246
	Furnishing Steel Piles HP12x63	FOOT	——	558	558
	Driving Piles	FOOT	——	246	246
	Test Pile Steel HP10x42	EACH	——	2	2
	Name Plates	EACH	——	1	1
	Anchor Bolts, 1"	EACH	40	——	40
	Geocomposite Wall Drain	SQ YD	——	53	53
①	Pipe Underdrains For Structures 4"	FOOT	——	104	104
①	Setting Piles in Rock	EACH	——	12	12

① See Special Provisions

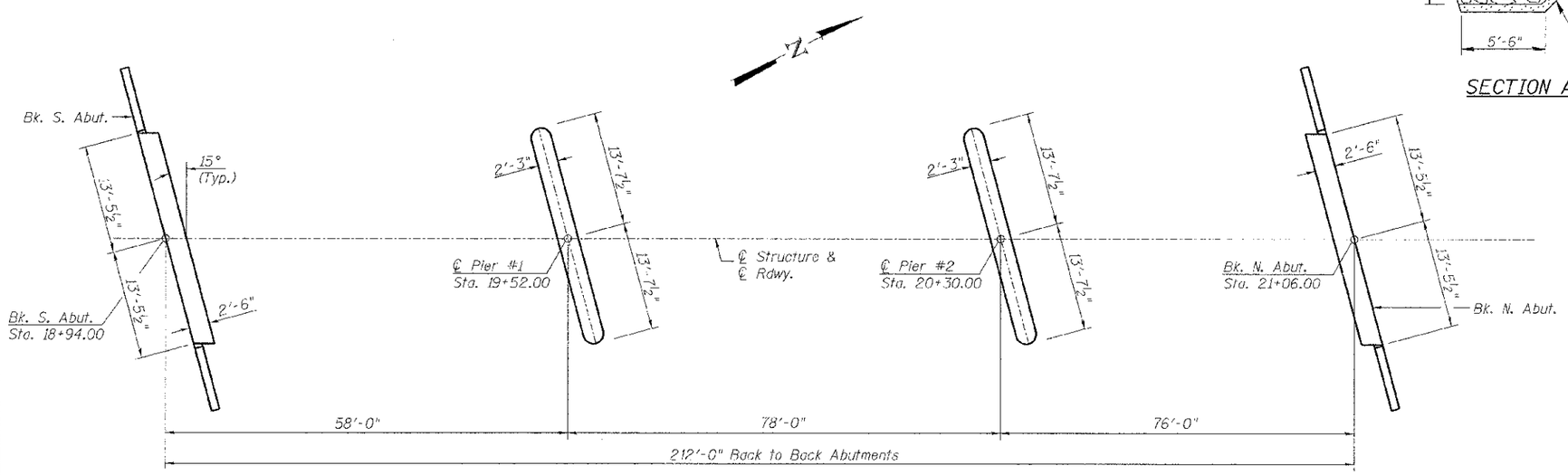

FOOTING LAYOUT

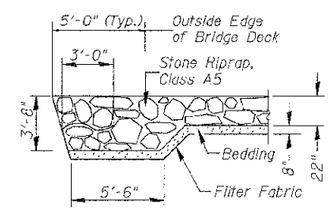

SECTION A-A

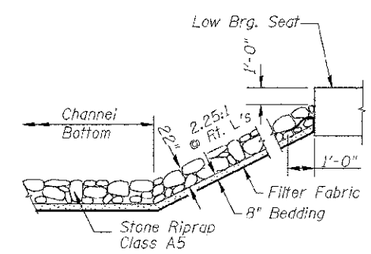

STONE RIPRAP DETAIL

GENERAL NOTES, BILL OF MATERIALS & FOOTING LAYOUT
C.H. 2 OVER SUGAR CREEK
SECTION 07-00073-00-BR
SCHUYLER COUNTY
STATION 20+00.00

SHEET NO. 2	ROUTE NO.	SECTION	COUNTY	TOTAL SHEETS	SHEET NO.
17 SHEETS	CH 2	07-00073-00-BR	SCHUYLER	35	8
	SN 085-3056		CONTRACT NO. 93584		
	FED. ROAD DIST. NO. 7	ILLINOIS	FED. AID PROJECT BRS-0455(107)		

29905002

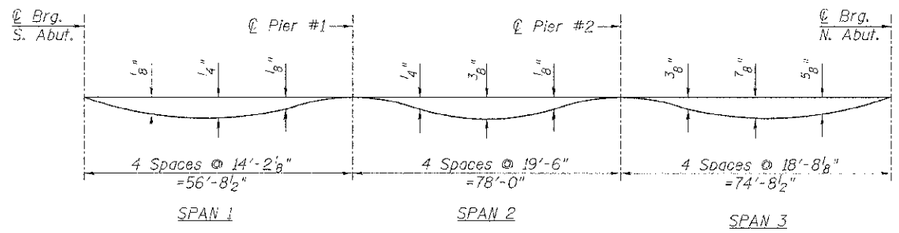

DEAD LOAD DEFLECTION DIAGRAM

(Includes weight of concrete only)

Note: The above deflections are not to be used in the field if the engineer is working from the grade elevations adjusted for dead load deflections as shown in the tables on sheets 4 & 5 of 17.

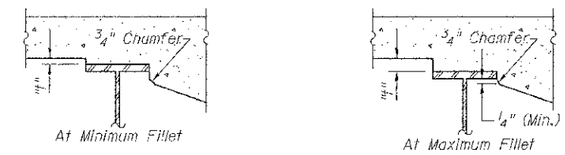

To determine "t": After all structural has been erected, elevations of the top flanges of the beams shall be taken at intervals shown below. These elevations subtracted from the "Theoretical Grade Elevations Adjusted for Dead Load Deflection" minus slab thickness, equals the fillet heights "t" above top flange of beams.

FILLET HEIGHTS

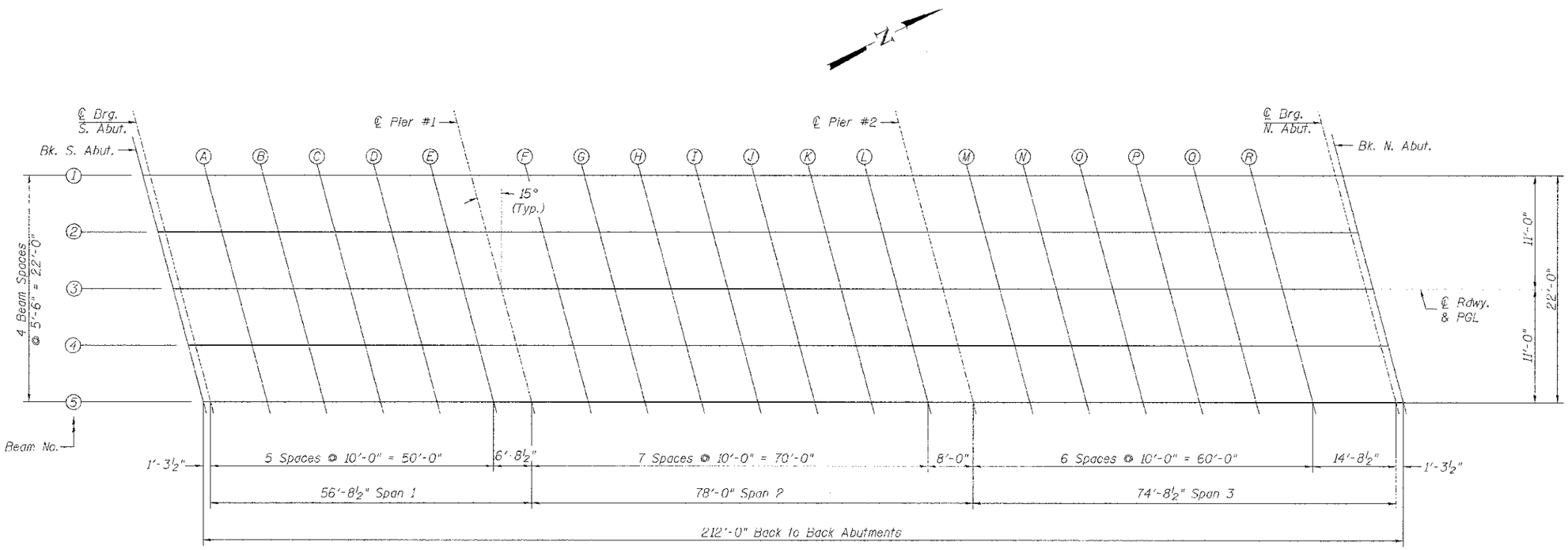

PLAN

TOP OF SLAB ELEVATIONS
C.H. 2 OVER SUGAR CREEK
SECTION 07-00073-00-BR
SCHUYLER COUNTY
STATION 20+00.00

SHEET NO. 3	ROUTE NO.	SECTION	COUNTY	TOTAL SHEETS	SHEET NO.
	CH 2	07-00073-00-BR	SCHUYLER	35	9
17 SHEETS	SN 085-3056		CONTRACT NO. 93584		
	FED. ROAD DIST. NO. 7	ILLINOIS	FED. AID PROJECT BRS-0455(107)		

29905003

BEAM #1

Location	Station	Offset	Theoretical Grade Elevations	Theoretical Grade Elevations Adjusted For Dead Load Deflection
Bk. S. Abutment	18+91.05	-11.00	542.37	542.37
CL Brg. S. Abutment	18+92.35	-11.00	542.32	542.32
A	19+02.35	-11.00	542.00	542.01
B	19+12.35	-11.00	541.67	541.69
C	19+22.35	-11.00	541.35	541.37
D	19+32.35	-11.00	541.02	541.03
E	19+42.35	-11.00	540.70	540.70
CL Brg. Pier #1	19+49.05	-11.00	540.48	540.48
F	19+59.05	-11.00	540.16	540.16
G	19+69.05	-11.00	539.83	539.85
H	19+79.05	-11.00	539.51	539.54
I	19+89.05	-11.00	539.18	539.21
J	19+99.05	-11.00	538.86	538.88
K	20+09.05	-11.00	538.53	538.54
L	20+19.05	-11.00	538.21	538.21
CL Brg. Pier #2	20+27.05	-11.00	537.95	537.95
M	20+37.05	-11.00	537.62	537.64
N	20+47.05	-11.00	537.30	537.34
O	20+57.05	-11.00	536.97	537.03
P	20+67.05	-11.00	536.65	536.72
Q	20+77.05	-11.00	536.32	536.39
R	20+87.05	-11.00	536.00	536.04
CL Brg. N. Abutment	21+01.76	-11.00	535.52	535.52
Bk. N. Abutment	21+03.05	-11.00	535.48	535.48

BEAM #2

Location	Station	Offset	Theoretical Grade Elevations	Theoretical Grade Elevations Adjusted For Dead Load Deflection
Bk. S. Abutment	18+92.53	-5.50	542.40	542.40
CL Brg. S. Abutment	18+93.82	-5.50	542.36	542.36
A	19+03.82	-5.50	542.04	542.05
B	19+13.82	-5.50	541.71	541.73
C	19+23.82	-5.50	541.39	541.40
D	19+33.82	-5.50	541.06	541.07
E	19+43.82	-5.50	540.74	540.74
CL Brg. Pier #1	19+50.53	-5.50	540.52	540.52
F	19+60.53	-5.50	540.19	540.20
G	19+70.53	-5.50	539.87	539.89
H	19+80.53	-5.50	539.55	539.57
I	19+90.53	-5.50	539.22	539.25
J	20+00.53	-5.50	538.90	538.92
K	20+10.53	-5.50	538.57	538.58
L	20+20.53	-5.50	538.25	538.25
CL Brg. Pier #2	20+28.53	-5.50	537.99	537.99
M	20+38.53	-5.50	537.66	537.68
N	20+48.53	-5.50	537.34	537.38
O	20+58.53	-5.50	537.01	537.07
P	20+68.53	-5.50	536.69	536.76
Q	20+78.53	-5.50	536.36	536.43
R	20+88.53	-5.50	536.04	536.08
CL Brg. N. Abutment	21+03.24	-5.50	535.56	535.56
Bk. N. Abutment	21+04.53	-5.50	535.52	535.52

PROFILE GRADE & BEAM #3

Location	Station	Offset	Theoretical Grade Elevations	Theoretical Grade Elevations Adjusted For Dead Load Deflection
Bk. S. Abutment	18+94.00	0.00	542.44	542.44
CL Brg. S. Abutment	18+95.29	0.00	542.40	542.40
A	19+05.29	0.00	542.08	542.09
B	19+15.29	0.00	541.75	541.77
C	19+25.29	0.00	541.43	541.44
D	19+35.29	0.00	541.10	541.11
E	19+45.29	0.00	540.78	540.78
CL Brg. Pier #1	19+52.00	0.00	540.56	540.56
F	19+62.00	0.00	540.23	540.24
G	19+72.00	0.00	539.91	539.93
H	19+82.00	0.00	539.58	539.61
I	19+92.00	0.00	539.26	539.29
J	20+02.00	0.00	538.93	538.96
K	20+12.00	0.00	538.61	538.62
L	20+22.00	0.00	538.28	538.28
CL Brg. Pier #2	20+30.00	0.00	538.02	538.02
M	20+40.00	0.00	537.70	537.71
N	20+50.00	0.00	537.37	537.41
O	20+60.00	0.00	537.05	537.11
P	20+70.00	0.00	536.72	536.79
Q	20+80.00	0.00	536.40	536.46
R	20+90.00	0.00	536.07	536.12
CL Brg. N. Abutment	21+04.71	0.00	535.60	535.60
Bk. N. Abutment	21+06.00	0.00	535.55	535.55

TOP OF SLAB ELEVATIONS
C.H. 2 OVER SUGAR CREEK
SECTION 07-00073-00-BR
SCHUYLER COUNTY
STATION 20+00.00

SHEET NO. 4	ROUTE NO.	SECTION	COUNTY	TOTAL SHEETS	SHEET NO.
17 SHEETS	CH 2	07-00073-00-BR	SCHUYLER	35	10
	SN 085-3056		CONTRACT NO. 93584		
	FED. ROAD DIST. NO. 7	ILLINOIS	FED. AID PROJECT BRS-0455(107)		

2390b004

BEAM #4

Location	Station	Offset	Theoretical Grade Elevations	Theoretical Grade Elevations Adjusted For Dead Load Deflection
Bk. S. Abutment	18+95.47	5.50	542.31	542.31
CL Brg. S. Abutment	18+96.77	5.50	542.27	542.27
A	19+06.77	5.50	541.94	541.95
B	19+16.77	5.50	541.62	541.64
C	19+26.77	5.50	541.29	541.31
D	19+36.77	5.50	540.97	540.98
E	19+46.77	5.50	540.64	540.64
CL Brg. Pier #1	19+53.47	5.50	540.42	540.42
F	19+63.47	5.50	540.10	540.11
G	19+73.47	5.50	539.77	539.79
H	19+83.47	5.50	539.45	539.48
I	19+93.47	5.50	539.12	539.15
J	20+03.47	5.50	538.80	538.82
K	20+13.47	5.50	538.47	538.49
L	20+23.47	5.50	538.15	538.15
CL Brg. Pier #2	20+31.47	5.50	537.89	537.89
M	20+41.47	5.50	537.56	537.58
N	20+51.47	5.50	537.24	537.28
O	20+61.47	5.50	536.91	536.98
P	20+71.47	5.50	536.59	536.66
Q	20+81.47	5.50	536.26	536.33
R	20+91.47	5.50	535.94	535.99
CL Brg. N. Abutment	21+06.18	5.50	535.46	535.46
Bk. N. Abutment	21+07.47	5.50	535.42	535.42

BEAM #5

Location	Station	Offset	Theoretical Grade Elevations	Theoretical Grade Elevations Adjusted For Dead Load Deflection
Bk. S. Abutment	18+96.95	11.00	542.18	542.18
CL Brg. S. Abutment	18+98.24	11.00	542.13	542.13
A	19+08.24	11.00	541.81	541.82
B	19+18.24	11.00	541.48	541.50
C	19+28.24	11.00	541.16	541.18
D	19+38.24	11.00	540.83	540.84
E	19+48.24	11.00	540.51	540.51
CL Brg. Pier #1	19+54.95	11.00	540.29	540.29
F	19+64.95	11.00	539.97	539.97
G	19+74.95	11.00	539.64	539.66
H	19+84.95	11.00	539.32	539.34
I	19+94.95	11.00	538.99	539.02
J	20+04.95	11.00	538.67	538.69
K	20+14.95	11.00	538.34	538.35
L	20+24.95	11.00	538.02	538.02
CL Brg. Pier #2	20+32.95	11.00	537.76	537.76
M	20+42.95	11.00	537.43	537.45
N	20+52.95	11.00	537.11	537.15
O	20+62.95	11.00	536.78	536.84
P	20+72.95	11.00	536.46	536.53
Q	20+82.95	11.00	536.13	536.20
R	20+92.95	11.00	535.81	535.85
CL Brg. N. Abutment	21+07.66	11.00	535.33	535.33
Bk. N. Abutment	21+08.95	11.00	535.29	535.29

TOP OF SLAB ELEVATIONS
C.H. 2 OVER SUGAR CREEK
SECTION 07-00073-00-BR
SCHUYLER COUNTY
STATION 20+00.00

	ROUTE NO.	SECTION	COUNTY	TOTAL SHEETS	SHEET NO.
SHEET NO. 5	CH 2	07-00073-00-BR	SCHUYLER	35	11
17 SHEETS	SN 085-3056		CONTRACT NO. 93584		
	FED. ROAD DIST. NO. 7	ILLINOIS	FED. AID PROJECT BRS-0455(107)		

29906005

Notes:
See Sheet 7 of 17 for superstructure details and Bill of Material.
Bars indicated thus 20 x 3-#5 etc. indicates 20 lines of bars with 3 lengths per line.
See Sheet 8 of 17 for Section A-A and diaphragm details.
See Sheet 9 of 17 for rail details.

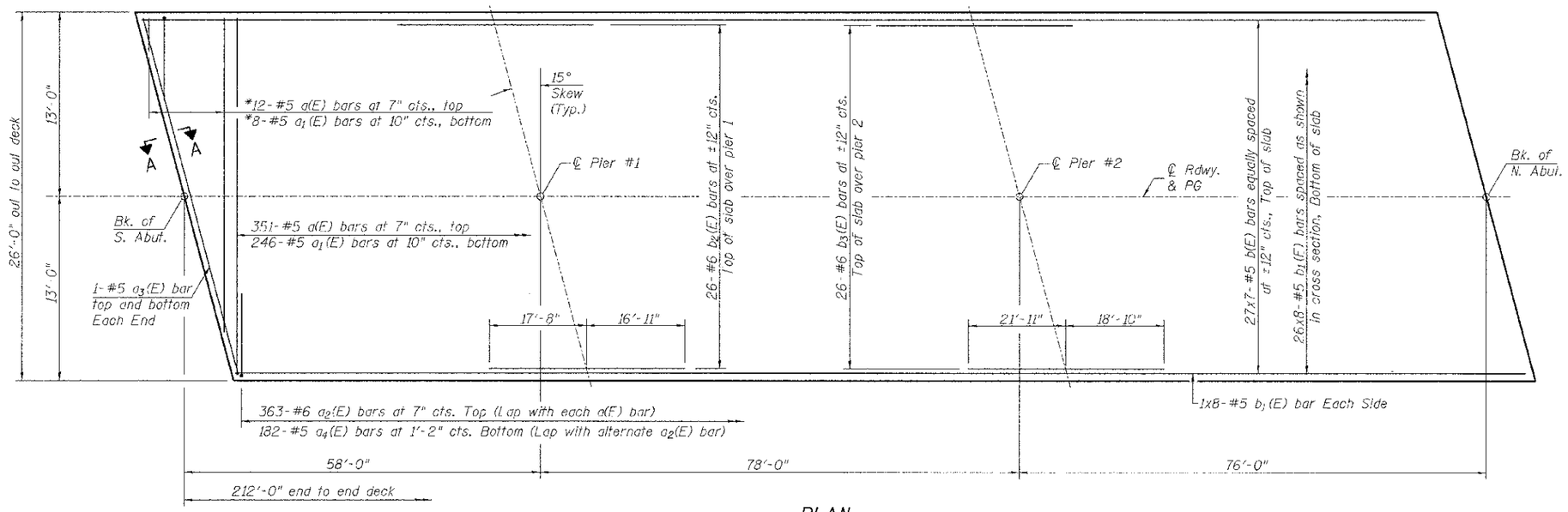

PLAN

MIN. BAR LAP
#5 = 2'-7"

* Order a(E) and a_1(E) bars full length. Cut to fit skew and use remainder of bars in opposite end.

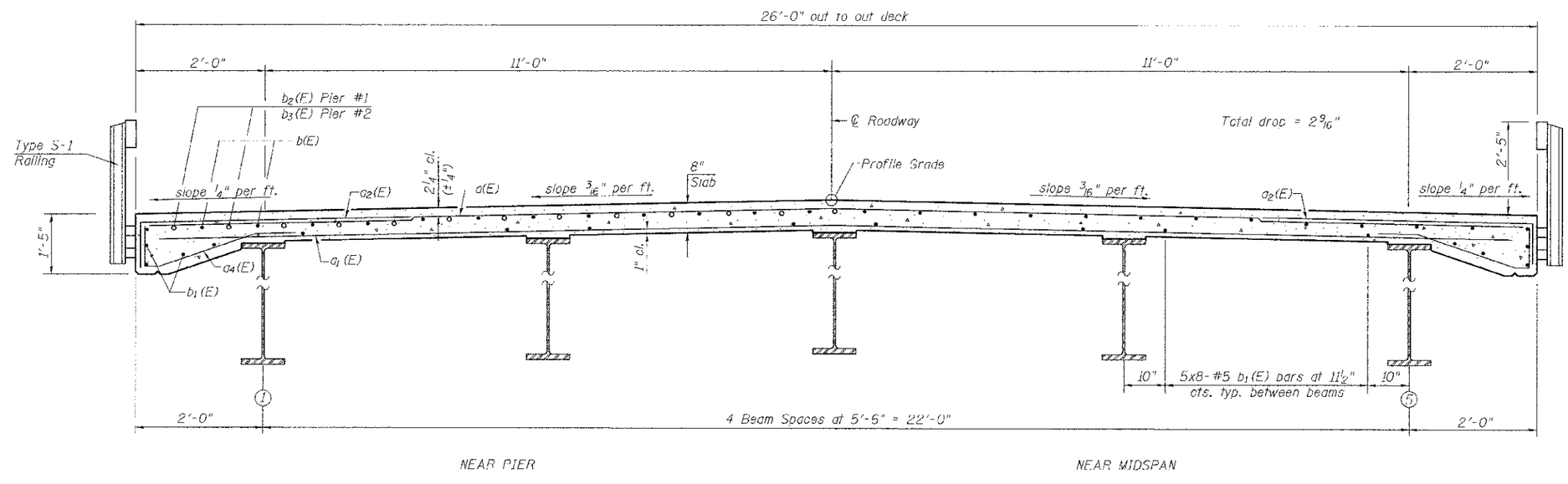

CROSS SECTION
(Looking North)

SUPERSTRUCTURE
C.H. 2 OVER SUGAR CREEK
SECTION 07-00073-00-BR
SCHUYLER COUNTY
STATION 20+00.00

SHEET NO. 6	ROUTE NO.	SECTION	COUNTY	TOTAL SHEETS	SHEET NO.
17 SHEETS	CH 2	07-00073-00-BR	SCHUYLER	35	12
	SN 085-3056		CONTRACT NO. 93584		
	FED. ROAD DIST. NO. 7	ILLINOIS	FED. AID PROJECT BRS-0455(107)		

2990b006

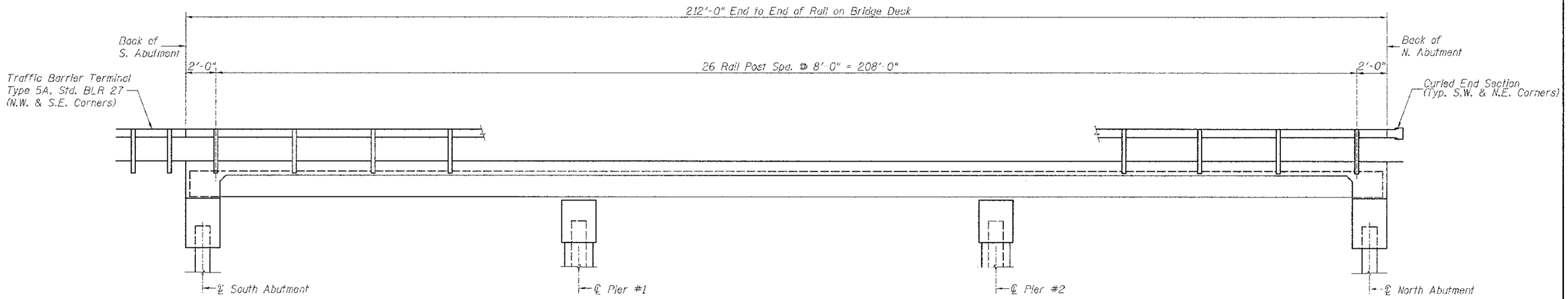

RAIL POST SPACING

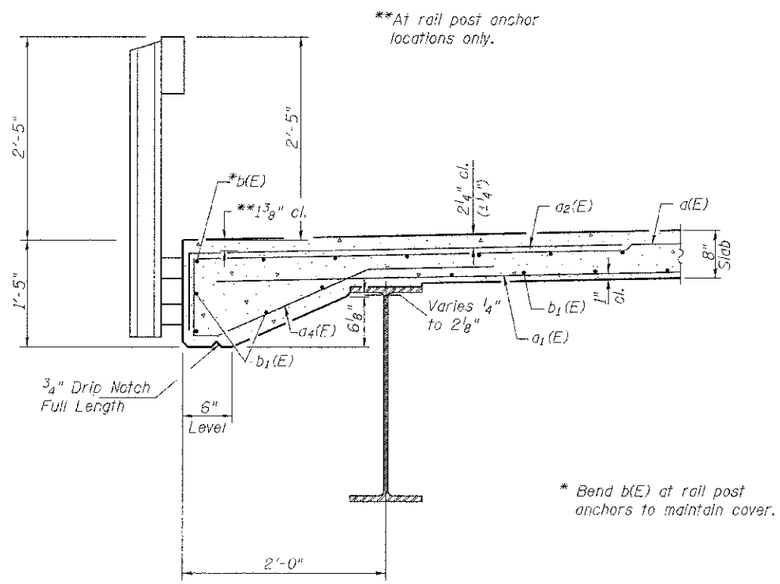

SECTION A-A

See Sheet 9 of 17 for Rail Post Anchor Details

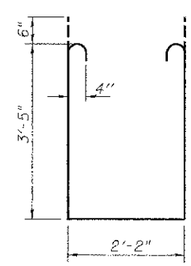

BAR s(E)

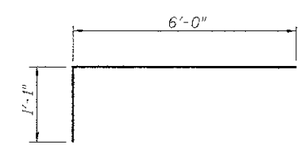

BAR a2(E)

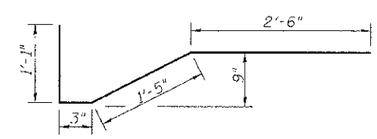

BAR a4(E)

SUPERSTRUCTURE BILL OF MATERIAL

Bar	No.	Size	Length	Shape
a(E)	363	#5	25'-9"	
a1(E)	254	#5	24'-9"	
a2(E)	726	#6	7'-1"	
a3(E)	4	#5	26'-1"	
a4(E)	364	#5	5'-3"	
b(E)	189	#5	32'-6"	
b1(E)	224	#5	28'-9"	
b2(E)	26	#6	34'-7"	
b3(E)	26	#6	40'-9"	
m(E)	6	#6	26'-7"	
m1(E)	12	#6	9'-1"	
m2(E)	8	#6	5'-5"	
m3(E)	4	#6	1' 11"	
m4(E)	8	#6	6'-6"	
s(E)	52	#4	10'-0"	
Reinforcement Bars, Epoxy Coated			POUND	43,110
Concrete Superstructure			CU YD	170.1

SUPERSTRUCTURE DETAILS
C.H. 2 OVER SUGAR CREEK
SECTION 07-00073-00-BR
SCHUYLER COUNTY
STATION 20+00.00

SHEET NO. 7	ROUTE NO.	SECTION	COUNTY	TOTAL SHEETS	SHEET NO.
17 SHEETS	CH 2	07-00073-00-BR	SCHUYLER	35	13
	SN 085-3056		CONTRACT NO. 93584		
	FED. ROAD DIST. NO. 7	ILLINOIS	FED. AID PROJECT BRS-0455(107)		

2990b007

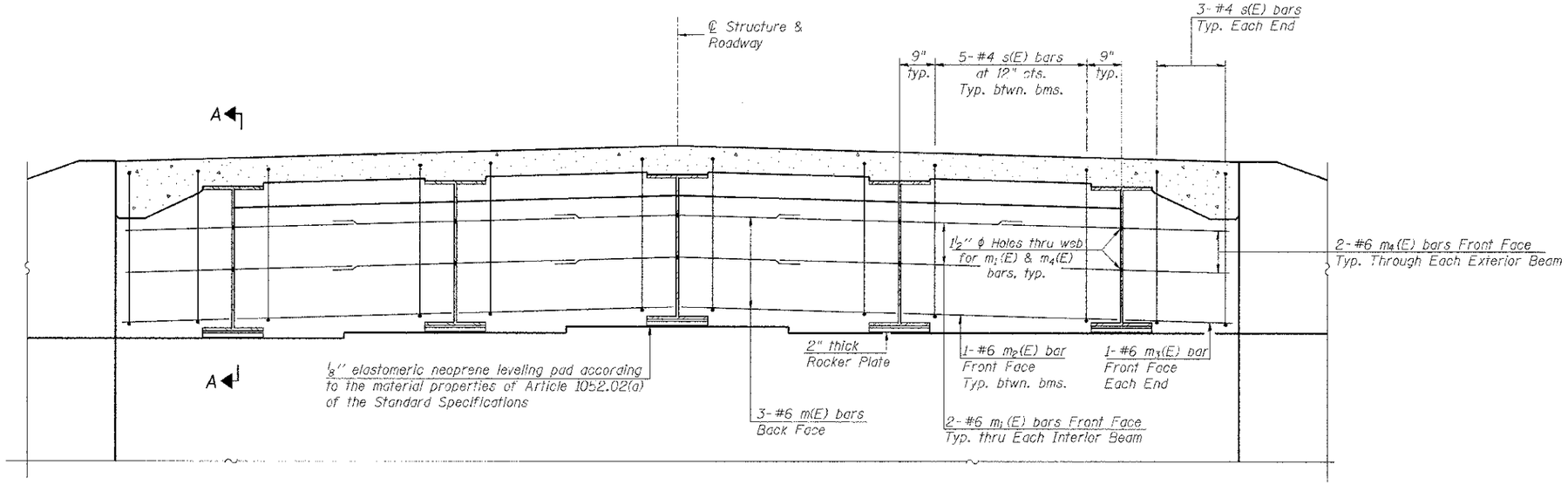

DIAPHRAGM ELEVATION

Notes:

Reinforcement bars in diaphragm are billed with superstructure on Sheet 7 of 17.

Concrete in diaphragm is included with Concrete Superstructure on Sheet 7 of 17.

See Sheet 7 of 17 for detail of bar s(E)

The s(E) bars shall be placed parallel to the beams. Spacing for these bars shall be at right angles to the beams.

See Sheet 13 & 14 of 17 for placement of v(E) bars.

MIN. BAR LAP

#6 bar = 3'-4"

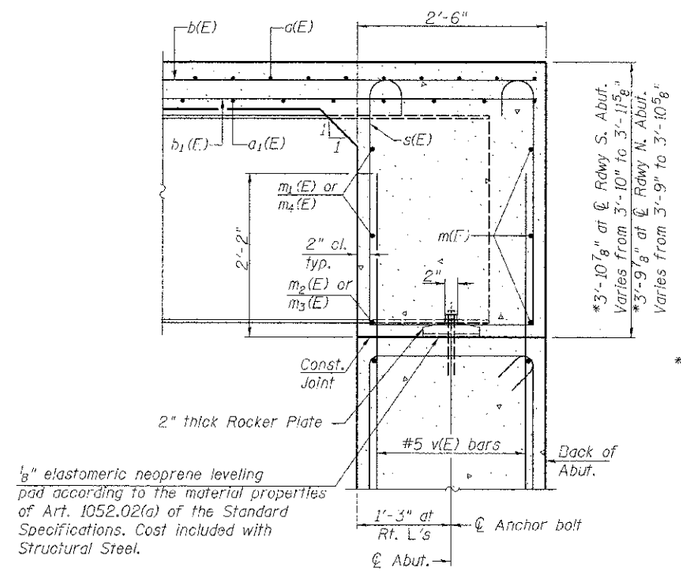

*Dimensions at back of abutment.

SECTION A-A

Dimensions at right angles to abutment, except as shown.

DIAPHRAGM DETAILS
C.H. 2 OVER SUGAR CREEK
SECTION 07-00073-00-BR
SCHUYLER COUNTY
STATION 20+00.00

SHEET NO. 8	ROUTE NO.	SECTION	COUNTY	TOTAL SHEETS	SHEET NO.
17 SHEETS	CH 2	07-00073-00-BR	SCHUYLER	35	14
	SN 085-3056		CONTRACT NO. 93584		
	FED. ROAD DIST. NO. 7	ILLINOIS	FED. AID PROJECT BRS-0455(107)		

2990b0GB

FOR RAIL POST SPACING SEE SH.#7 OF 17

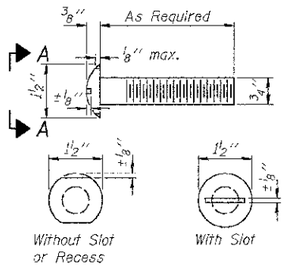

VIEW A-A
ROUND HEAD BOLT

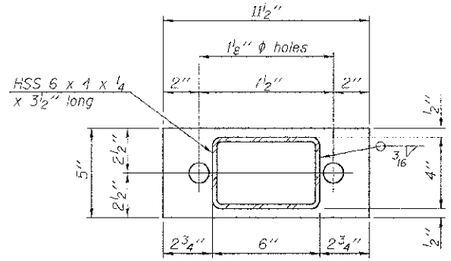

PL 1/2" x 11 1/2" x 5"

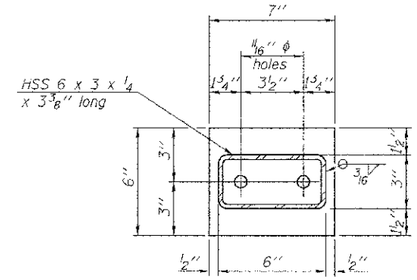

PL 1/2" x 7" x 6"

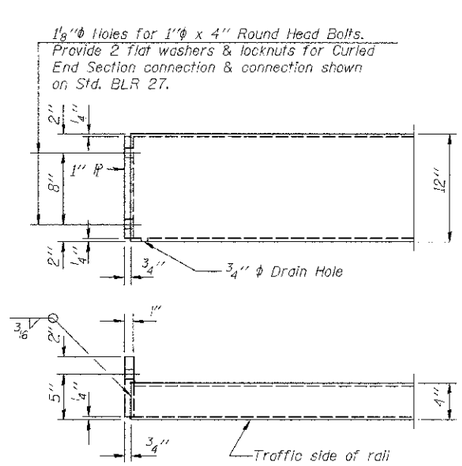

END OF RAIL DETAILS

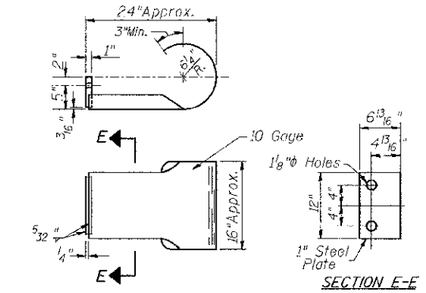

CURLED END SECTION

(2 Req'd) Cost Included with Steel Railing, Type S-1.
Terminal Markers - Direct Applied shall be placed on end of each Curled End Section. (S.W. and N.E. Corners)

NOTES

All field drilled holes shall be coated with an approved zinc rich paint before erection.

For multi-span bridges, sufficient 1/4" x 6" x 1'-2" galvanized steel shims shall be provided to align rail between adjacent spans. Cost included with Steel Railing, Type S-1.

All steel rail elements shall be galvanized according to Article 509.05 of the Standard Specifications.

*** The studs of the anchor devices shall be placed below the top reinforcement bars and the outermost longitudinal reinforcement bar shall be placed directly above the studs of the rail post anchor device.

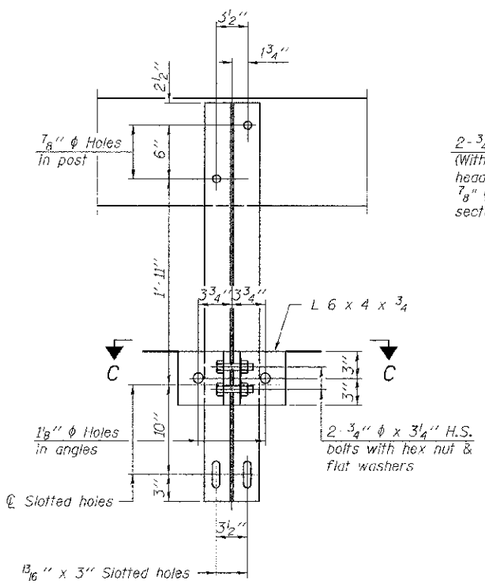

SECTION B-B

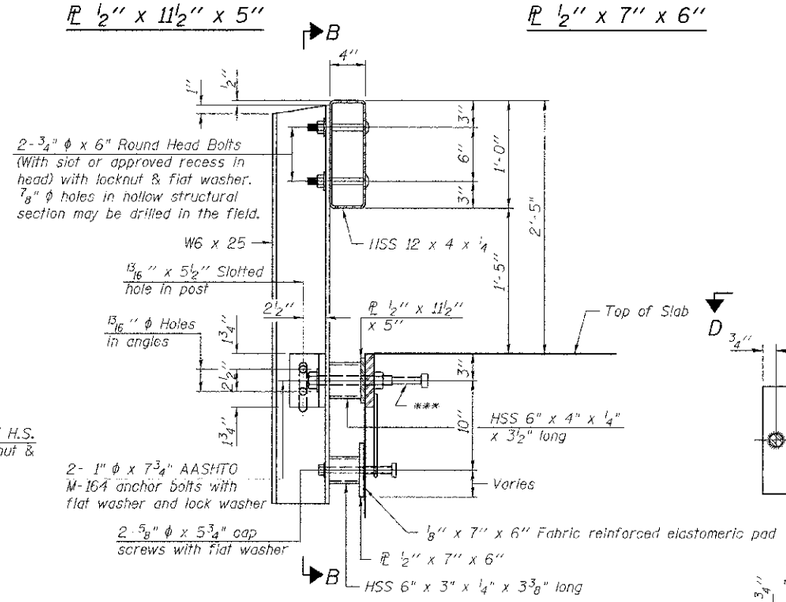

SECTION AT RAILING POST

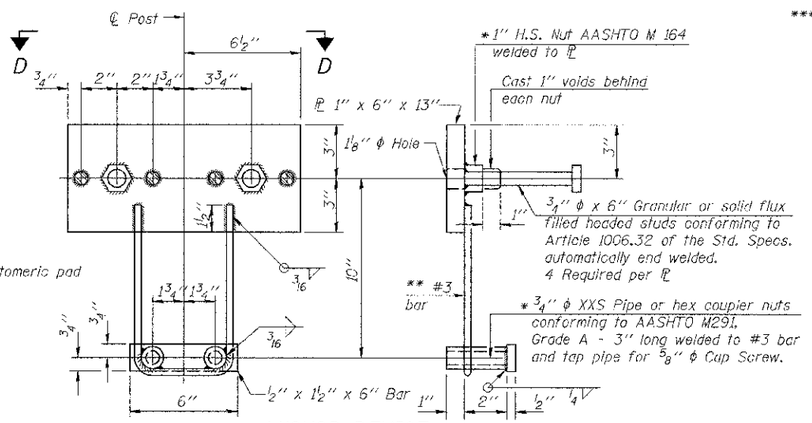

ANCHOR DEVICE

* Threaded areas shall be plugged or blocked off during casting of beam.

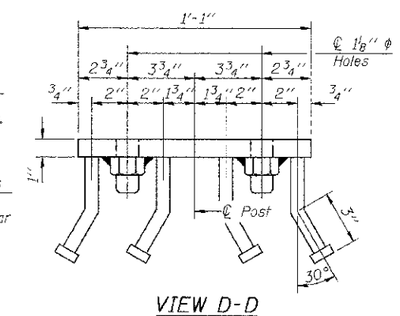

VIEW D-D

** Whenever the lower insert assemblies interfere with strand locations, the #3 bars shall be cut and adjusted in order to allow raising or lowering of the lower inserts. Maximum adjustment not to exceed 1/2".

BILL OF MATERIAL

Item	Unit	Quantity
Steel Railing, Type S-1	FOOT	424

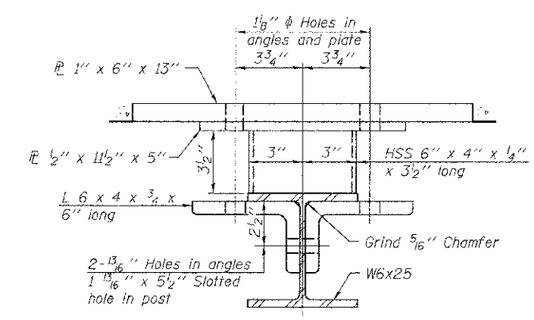

SECTION C-C

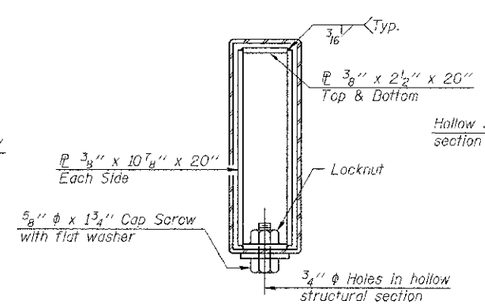

SECTIONS AT RAIL SPLICE

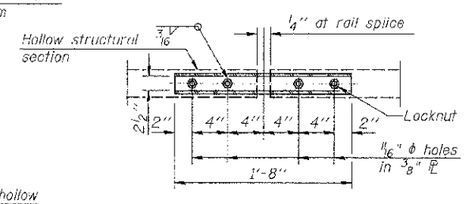

PLAN-BOTT. SPLICE PL
TYPICAL

STEEL RAILING, TYPE S-1
C.H. 2 OVER SUGAR CREEK
SECTION 07-00073-00-BR
SCHUYLER COUNTY
STATION 20+00.00

SHEET NO. 9	ROUTE NO.	SECTION	COUNTY	TOTAL SHEETS	SHEET NO.
17 SHEETS	CH 2	07-00073-00-BR	SCHUYLER	35	15
	SN 085-3056		CONTRACT NO. 93584		
	FED. ROAD DIST. NO. 7	ILLINOIS	FED. AID PROJECT BRS-0455(107)		

2930b009

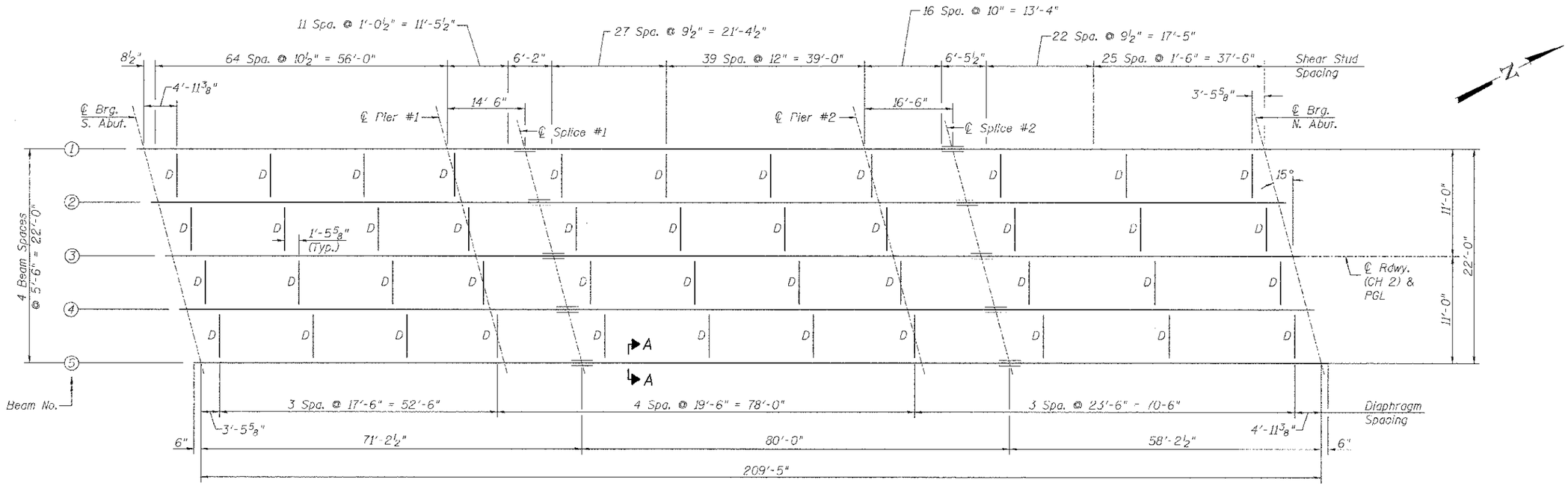

Note:
All beams are W36x135 AASHTO M270 Grade 50W NTR.
Load carrying components designated "NTR" shall conform to the Impact Testing Requirement, Zone 2.
See Sheet 11 of 17 for Structural Steel Details.

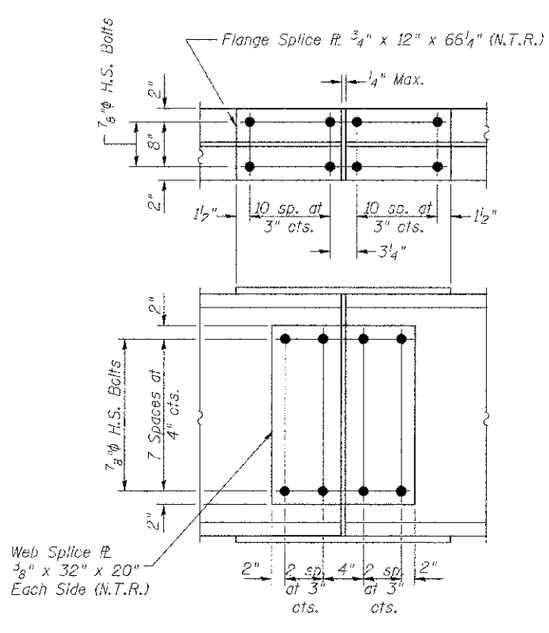

SPLICE DETAIL
(10 Required)

*TOP OF BEAM ELEVATIONS

Beam No.	℄ Brg. South Abut.	℄ Brg. Pier #1	℄ Splice #1	℄ Brg. Pier #2	℄ Splice #2	℄ Brg. North Abut.
1	541.61	539.73	539.25	537.20	536.67	534.80
2	541.65	539.77	539.29	537.24	536.71	534.84
3	541.68	539.81	539.33	537.28	536.75	534.88
4	541.55	539.67	539.19	537.14	536.61	534.74
5	541.42	539.54	539.06	537.01	536.48	534.61

*For Fabrication Only.

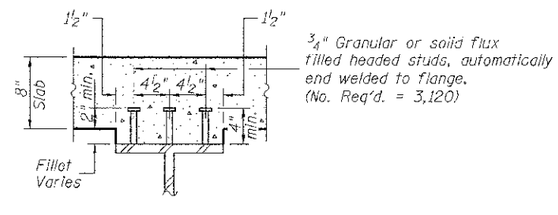

SECTION A-A

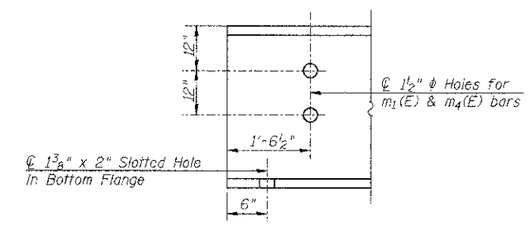

TYPICAL END OF BEAM DETAIL

FRAMING PLAN AND DETAILS
C.H. 2 OVER SUGAR CREEK
SECTION 07-00073-00-BR
SCHUYLER COUNTY
STATION 20+00.00

SHEET NO. 10	ROUTE NO.	SECTION	COUNTY	TOTAL SHEETS	SHEET NO.
17 SHEETS	CH 2	07-00073-00-BR	SCHUYLER	35	16
	SN 085-3056		CONTRACT NO. 93584		
	FED. ROAD DIST. NO. 7	ILLINOIS	FED. AID PROJECT BRS-0455(107)		

29906010

INTERIOR BEAM MOMENT TABLE						
		0.4 Sp. 1	Pier 1	0.5 Sp. 2	Pier 2	0.6 Sp. 3
I_s	(in^4)	7800	7800	7800	7800	7800
$I_c(n)$	(in^4)	19,365	19,365	19,365	——	19,365
$I_c(3n)$	(in^4)	14,131	14,131	14,131	——	14,131
$I_c(cr)$	(in^4)	——	10,162	——	10,162	——
S_s	(in^3)	439	439	439	439	439
$S_c(n)$	(in^3)	629	629	629	——	629
$S_c(3n)$	(in^3)	565	565	565	——	565
$S_c(cr)$	(in^3)	——	495	——	495	——
DC1	(k/')	0.731	0.731	0.731	0.731	0.731
M_{DC1}	('k)	158	311	176	449	310
DC2	(k/')	0.030	0.030	0.030	0.030	0.030
M_{DC2}	('k)	7	13	7	18	13
DW	(k/')	0.275	0.275	0.275	0.275	0.275
M_{DW}	('k)	59	117	66	169	117
M_{LL+IM}	('k)	557	565	620	710	756
M_u (Strength I)	('k)	1,268	1,569	1,413	2,080	1,901
$\phi_f M_n$	('k)	3,284	2,533	3,267	2,325	3,161
f_s DC1	(ksi)	4.32	8.50	4.81	12.27	8.47
f_s DC2	(ksi)	0.15	0.27	0.15	0.44	0.27
f_s DW	(ksi)	1.25	2.48	1.40	4.09	2.48
f_s (LL + IM)	(ksi)	10.62	10.77	11.82	17.21	14.42
f_s (Service II)	(ksi)	19.52	25.25	21.73	39.17	29.97
$0.95R_hF_yf$	(ksi)	47.5	47.5	47.5	47.5	47.5
f_s (Total)(Strength I)	(ksi)	——	——	——	——	——
$\phi_f F_n$	(ksi)	——	——	——	——	——
V_f	(k)	30.1	31.5	22.5	29.7	32.2

INTERIOR BEAM REACTION TABLE					
		S. Abut.	Pier 1	Pier 2	N. Abut.
R_{DC1}	(k)	15.2	53.0	63.6	21.3
R_{DC2}	(k)	0.6	2.2	2.6	0.9
R_{DW}	(k)	5.8	19.8	23.9	8.0
R_{LL+IM}	(k)	60.2	112.2	113.3	65.4
R_{Total}	(k)	81.8	187.2	203.4	95.6

I_s, S_s: Non-composite moment of inertia and section modulus of the steel section used for computing f_s (Total-Strength I, and Service II) due to non-composite dead loads ($in.^4$ and $in.^3$).

$I_c(n)$, $S_c(n)$: Composite moment of inertia and section modulus of the steel and deck based upon the modular ratio, "n", used for computing f_s (Total-Strength I, and Service II) in uncracked sections due to short-term composite live loads ($in.^4$ and $in.^3$).

$I_c(3n)$, $S_c(3n)$: Composite moment of inertia and section modulus of the steel and deck based upon 3 times the modular ratio, "3n", used for computing f_s (Total-Strength I, and Service II) in uncracked sections, due to long-term composite (superimposed) dead loads ($in.^4$ and $in.^3$).

$I_c(cr)$, $S_c(cr)$: Composite moment of inertia and section modulus of the steel and longitudinal deck reinforcement, used for computing f_s (Total-Strength I and Service II) in cracked sections, due to both short-term composite live loads and long-term composite (superimposed) dead loads ($in.^4$ and $in.^3$)

DC1: Un-factored non-composite dead load (kips/ft.).

M_{DC1}: Un-factored moment due to non-composite dead load (kip-ft.).

DC2: Un-factored long-term composite (superimposed excluding future wearing surface) dead load (kips/ft.).

M_{DC2}: Un-factored moment due to long-term composite (superimposed excluding future wearing surface) dead load (kip-ft.).

DW: Un-factored long-term composite (superimposed future wearing surface only) dead load (kips/ft.).

M_{DW}: Un-factored moment due to long-term composite (superimposed future wearing surface only) dead load (kip-ft.).

M_{LL+IM}: Un-factored live load moment plus dynamic load allowance (impact) (kip-ft.).

M_u (Strength I): Factored design moment (kip-ft.).
$1.25\ (M_{DC1} + M_{DC2}) + 1.5\ M_{DW} + 1.75\ M_{LL+IM}$

$\phi_f M_n$: Compact composite positive moment capacity computed according to Article 6.10.7.1 or non-slender negative moment capacity according to Article A6.1.1 or A6.1.2 (kip-ft.).

f_s DC1: Un-factored stress at edge of flange for controlling steel flange due to vertical non-composite dead loads as calculated below (ksi).
M_{DC1}/S_{nc}

f_s DC2: Un-factored stress at edge of flange for controlling steel flange due to vertical composite dead loads as calculated below (ksi).
$M_{DC2}/S_c(3n)$ or $M_{DC2}/S_c(cr)$ as applicable.

f_s DW: Un-factored stress at edge of flange for controlling steel flange due to vertical composite future wearing surface loads as calculated below (ksi).
$M_{DW}/S_c(3n)$ or $M_{DW}/S_c(cr)$ as applicable.

f_s (LL + IM): Un-factored stress at edge of flange for controlling steel flange due to vertical composite live load plus impact loads as calculated below (ksi).
$M_{LL+IM}/S_c(3n)$ or $M_{DW}/S_c(cr)$ as applicable.

f_s (Service II): Sum of stresses as computed below (ksi).
$f_sDC1 + f_sDC2 + f_sDW + 1.3f_s(LL + IM)$

$0.95R_hF_yf$: Composite stress capacity for Service II loading according to Article 6.10.4.2 (ksi).

f_s (Total)(Strength I): Sum of stresses as computed below on non-compact section (ksi).
$1.25(f_sDC1 + f_sDC2) + 1.5f_sDW + 1.75f_s(LL + IM)$

$\phi_f F_n$: Non-Compact composite positive or negative stress capacity for Strength I loading according to Article 6.10.7 or 6.10.8 (ksi).

V_f: Maximum factored shear range in span computed according to Article 6.10.10.

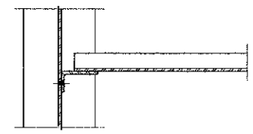

SECTION A-A

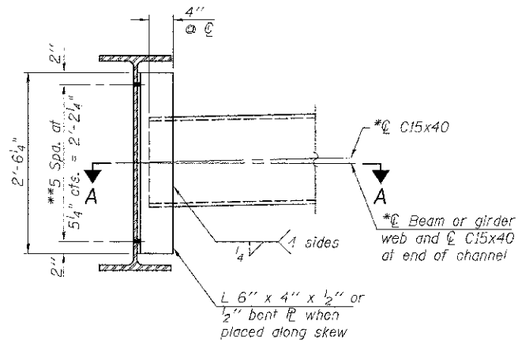

DIAPHRAGM D
(44 Required)

Note:
Two hardened washers required for each set of oversized holes.
*Alternate channels are permitted to facilitate material acquisition. Calculated weight of structural steel is based on the lighter section. The alternate, C15x50, if utilized, shall be provided at no additional cost to the Department.
**¾" ϕ HS bolts, 9/16" ϕ holes.
All cross frames or diaphragms shall be installed as steel is erected and secured with erection pins and bolts except as otherwise noted. Individual cross frames or diaphragms at supports may be temporarily disconnected to install bearing anchor rods.

STRUCTURAL STEEL DETAILS
C.H. 2 OVER SUGAR CREEK
SECTION 07-00073-00-BR
SCHUYLER COUNTY
STATION 20+00.00

SHEET NO. 11	ROUTE NO.	SECTION	COUNTY	TOTAL SHEETS	SHEET NO.
	CH 2	07-00073-00-BR	SCHUYLER	35	17
17 SHEETS	SN 085-3056		CONTRACT NO. 93584		
	FED. ROAD DIST. NO. 7	ILLINOIS	FED. AID PROJECT BRS-0455(107)		

29905011

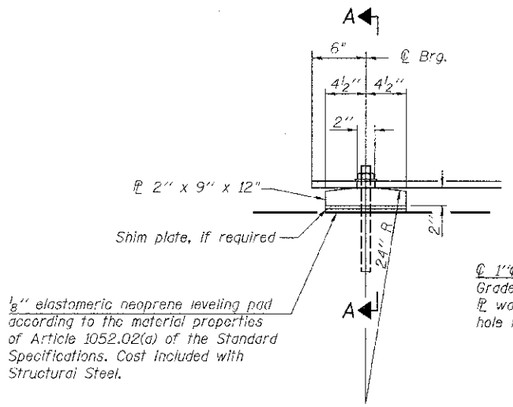

ELEVATION AT ABUTMENT

(10 Required)

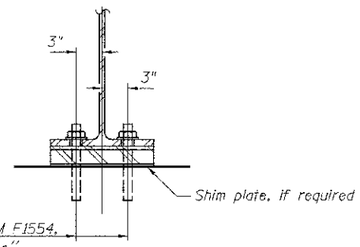

SECTION A-A

Notes:

Anchor bolts shall be ASTM F1554 all thread (or an Engineer-approved alternate material) of the grade(s) and diameter(s) specified. The corresponding specified grade of AASHTO M314 anchor bolts may be used in lieu of ASTM F1554.

Anchor bolts at fixed bearings may be either cast in place or installed in holes drilled after the supported member is in place.

Drilled and set anchor bolts shall be installed according to Article 521.06 of the Standard Specifications.

The structural steel bearing plates shall conform to the requirements of AASHTO M270 Grade 50W.

Anchors shall be set and grout cured for a minimum of 24 hours prior to forming the bridge deck.

Two ⅛" in. adjusting shims shall be provided for each bearing in addition to all other plates or shims and placed as shown on bearing details.

SHIM ℗ TABLE

Beam	S. Abut.	Pier 1	Pier 2	N. Abut.
1	—	—	—	—
2	½"	½"	½"	½"
3	—	—	—	—
4	—	—	—	—
5	—	—	—	—

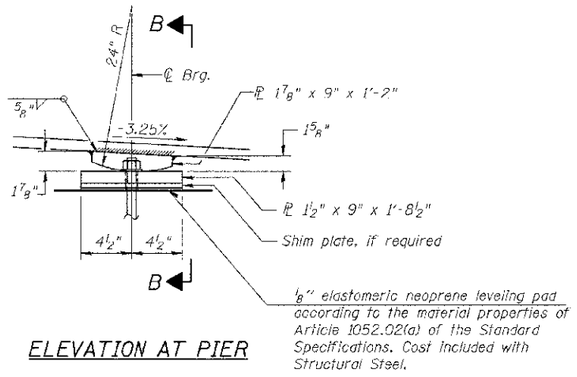

ELEVATION AT PIER

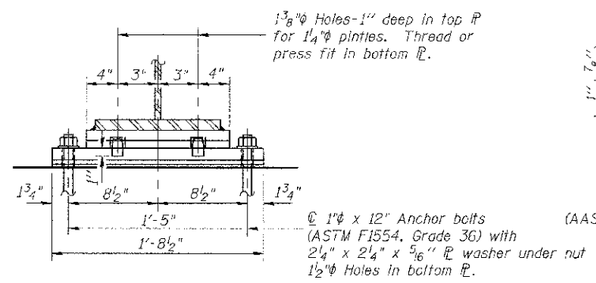

SECTION B-B

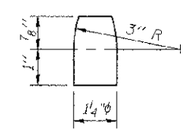

PINTLE

(AASHTO M270, Grade 50W)

BILL OF MATERIAL

ITEM	UNIT	TOTAL
Anchor Bolts, 1"	EACH	40

FIXED BEARING

(10 Required)

BEARING DETAILS
C.H. 2 OVER SUGAR CREEK
SECTION 07-00073-00-BR
SCHUYLER COUNTY
STATION 20+00.00

	ROUTE NO.	SECTION	COUNTY	TOTAL SHEETS	SHEET NO.
SHEET NO. 12	CH 2	07-00073-00-BR	SCHUYLER	35	18
17 SHEETS	SN 085-3056		CONTRACT NO. 93584		
	FED. ROAD DIST. NO. 7	ILLINOIS	FED. AID PROJECT BRS-0455(107)		

2950b012

Notes:
Pour steps monolithically with cap.

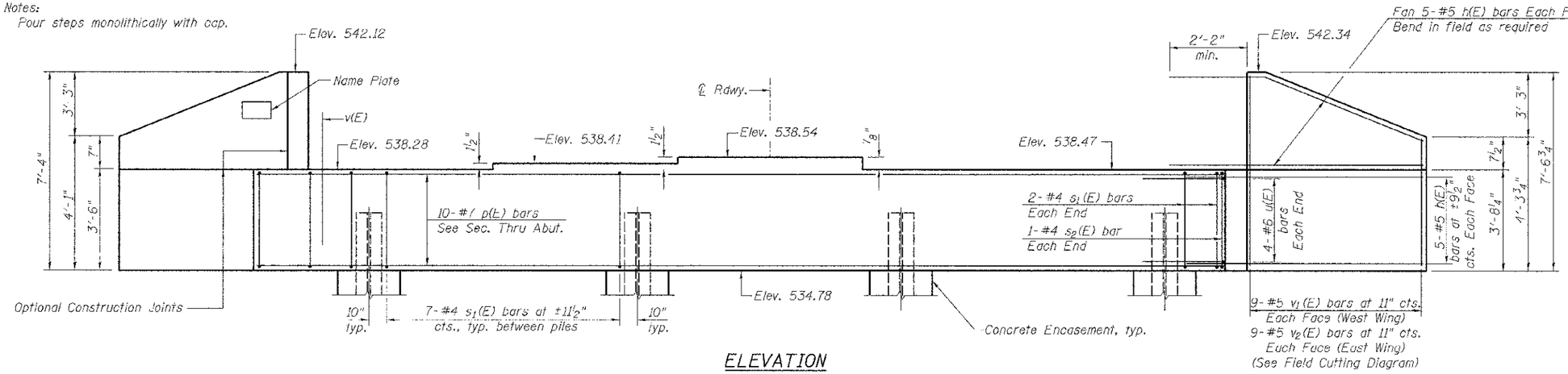

ELEVATION
(Looking South)

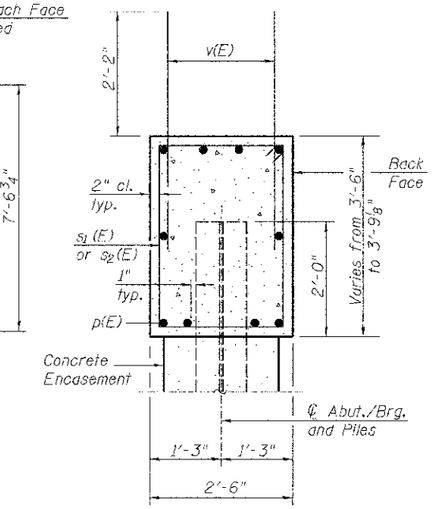

SEC. THRU ABUT.
(At Right Angles)

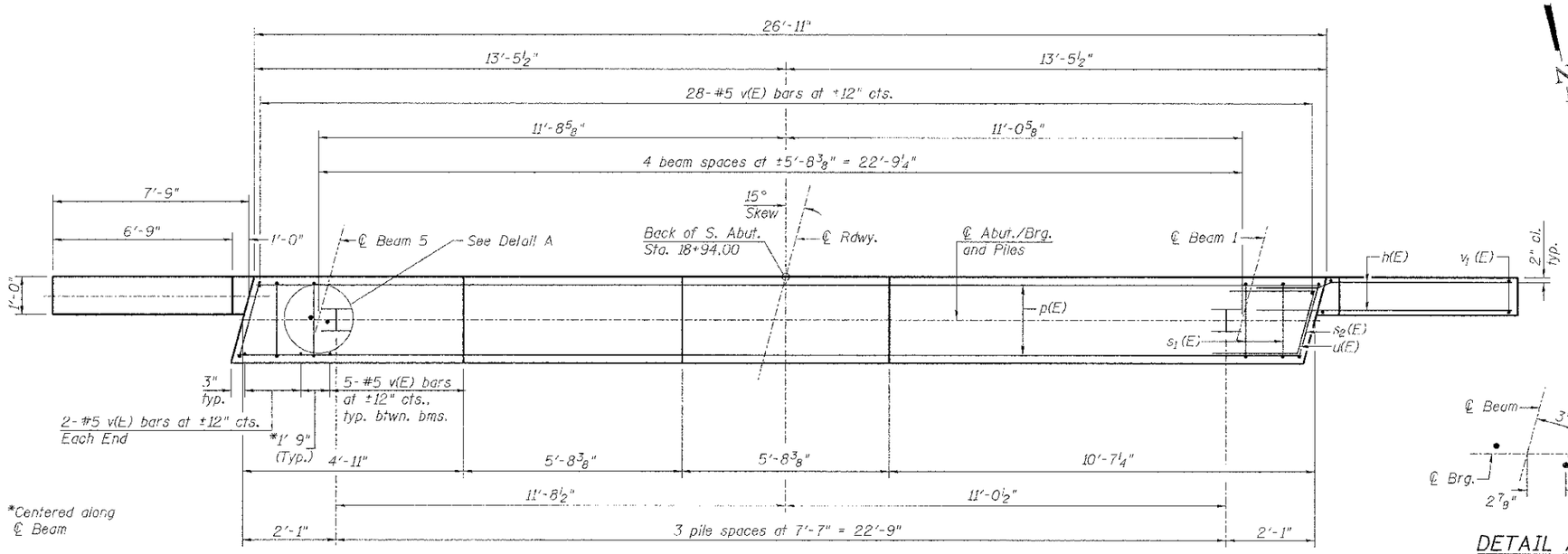

PLAN

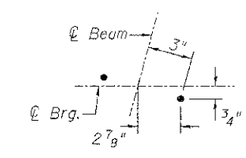

DETAIL A

SOUTH ABUTMENT BILL OF MATERIAL

Bar	No.	Size	Length	Shape
h(E)	40	#5	9'-9"	
p(E)	10	#7	26'-7"	
s1(E)	25	#4	11'-5"	
s2(E)	2	#4	11'-7"	
u(E)	8	#6	10'-2"	
v(E)	52	#5	4'-4"	
v1(E)	9	#5	10'-11"	
v2(E)	9	#5	10'-7"	
Structure Excavation			CU YD	45
Concrete Structures			CU YD	12.6
Reinforcement Bars, Epoxy Coated			POUND	1,720
Name Plates			EACH	1
Furnishing Steel Piles HP10x42			FOOT	111
Driving Piles			FOOT	111
Test Pile Steel HP10x42			EACH	1
Concrete Encasement			CU YD	1.4

See sheet 17 of 17 for Pile and Concrete Encasement details.
Space Reinforcement in cap to miss anchor bolts.

PILE DATA

Type & Size: Steel HP10x42
Nominal Required Bearing: 335 kips
Factored Resistance Available: 184 kips
Est. Length: 37'
No. Required: 4 (Includes 1 Test Pile)

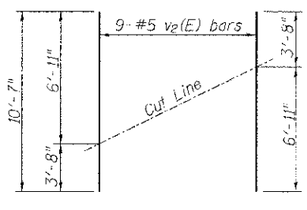

FIELD CUTTING DIAGRAM
Order v2(E) full length. Cut as shown and use remainder of bars in opposite face.

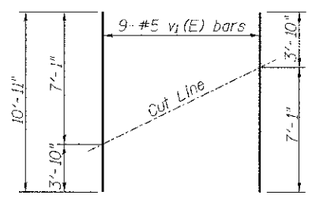

FIELD CUTTING DIAGRAM
Order v1(E) full length. Cut as shown and use remainder of bars in opposite face.

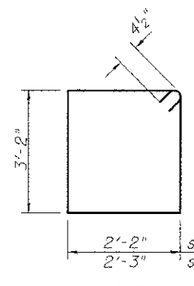

BARS s1(E) & s2(E)

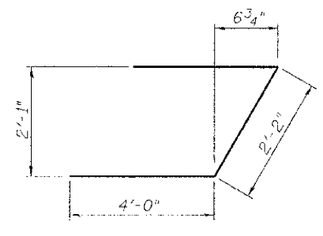

BAR u(E)

SOUTH ABUTMENT
C.H. 2 OVER SUGAR CREEK
SECTION 07-00073-00-BR
SCHUYLER COUNTY
STATION 20+00.00

SHEET NO. 13	ROUTE NO.	SECTION	COUNTY	TOTAL SHEETS	SHEET NO.
17 SHEETS	CH 2	07-00073-00-BR	SCHUYLER	35	19
	SN 085-3056		CONTRACT NO. 93584		
	FED. ROAD DIST. NO. 7	ILLINOIS	FED. AID PROJECT BRS-0455(107)		

2990b013

Notes:
Pour steps monolithically with cap.

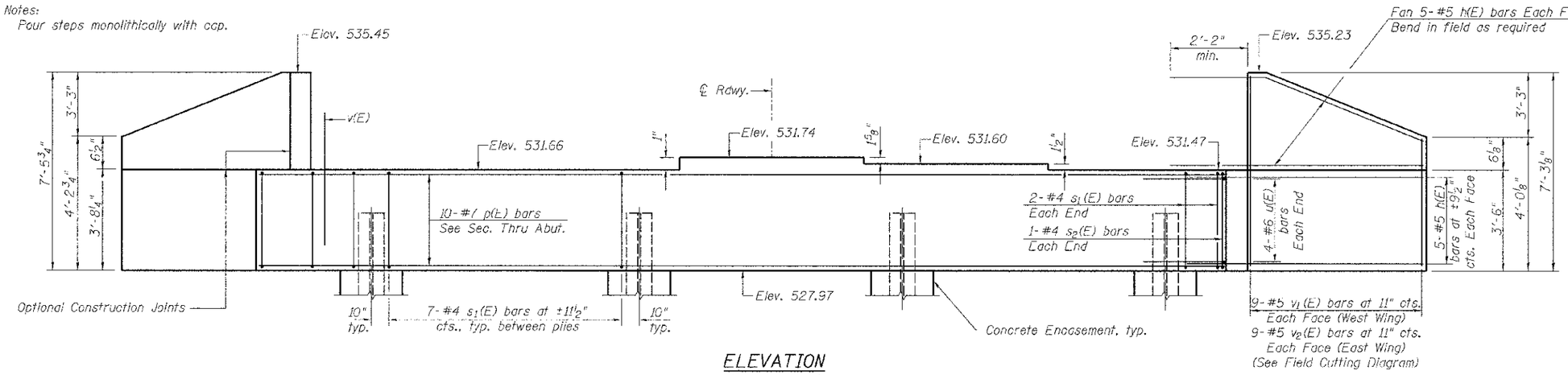

ELEVATION
(Looking North)

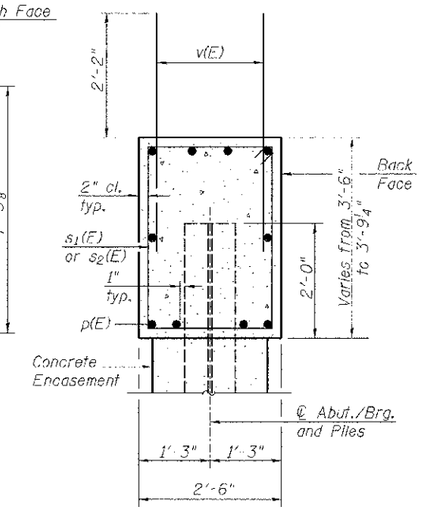

SEC. THRU ABUT.
(At Right Angles)

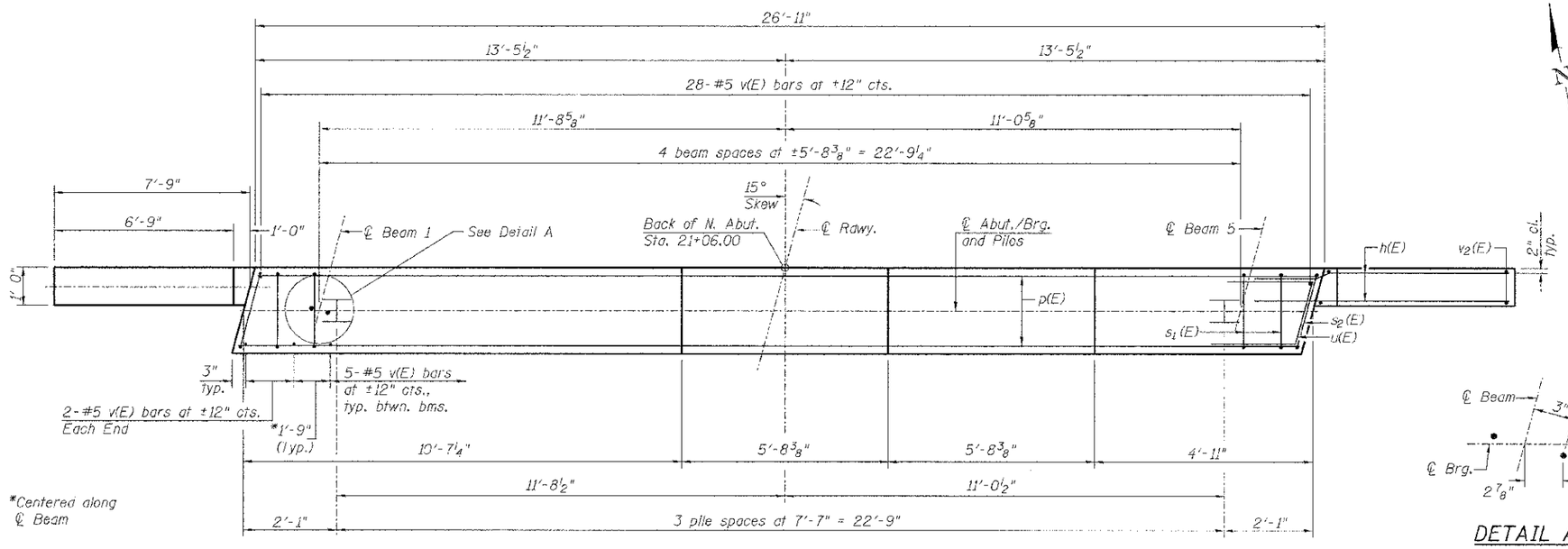

PLAN

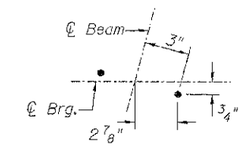

DETAIL A

NORTH ABUTMENT BILL OF MATERIAL

Bar	No.	Size	Length	Shape
h(E)	40	#5	9'-9"	
p(E)	10	#7	26'-7"	
s1(E)	25	#4	11'-5"	
s2(E)	2	#4	11'-7"	
u(E)	8	#6	10'-2"	
v(E)	52	#5	4'-4"	
v1(E)	9	#5	10'-11"	
v2(E)	9	#5	10'-7"	
Structure Excavation			CU YD	40
Concrete Structures			CU YD	12.5
Reinforcement Bars, Epoxy Coated			POUND	1,720
Furnishing Steel Piles HP10x42			FOOT	135
Driving Piles			FOOT	135
Test Pile Steel HP10x42			EACH	1
Concrete Encasement			CU YD	1.4

See sheet 17 of 17 for Pile and Concrete Encasement details.
Space Reinforcement in cap to miss anchor bolts.

PILE DATA

Type & Size: Steel HP10x42
Nominal Required Bearing: 335 kips
Factored Resistance Available: 184 kips
Est. Length: 45'
No. Required: 4 (Includes 1 Test Pile)

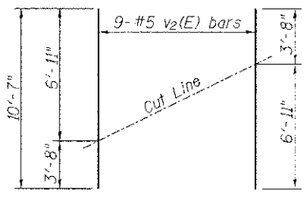

FIELD CUTTING DIAGRAM
Order v2(E) full length. Cut as shown and use remainder of bars in opposite face.

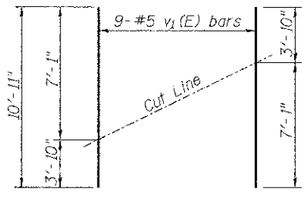

FIELD CUTTING DIAGRAM
Order v1(E) full length. Cut as shown and use remainder of bars in opposite face.

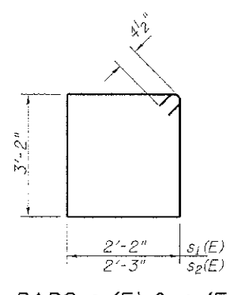

BARS s1(E) & s2(E)

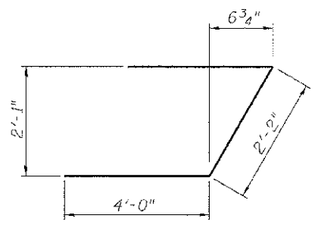

BAR u(E)

NORTH ABUTMENT
C.H. 2 OVER SUGAR CREEK
SECTION 07-00073-00-BR
SCHUYLER COUNTY
STATION 20+00.00

SHEET NO. 14	ROUTE NO.	SECTION	COUNTY	TOTAL SHEETS	SHEET NO.
17 SHEETS	CH 2	07-00073-00-BR	SCHUYLER	35	20
	SN 085-3056		CONTRACT NO. 93584		
	FED. ROAD DIST. NO. 7	ILLINOIS	FED. AID PROJECT BRS-0455(107)		

2990a014

Notes:
All edges shall have standard $\frac{3}{4}$" chamfer.
Pour steps monolithically with cap.
Space reinforcement to miss anchor bolts.
See Sh. 17 of 17 for pile, rock socket, and concrete encasement details.

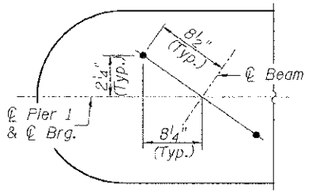

DETAIL B
ANCHOR BOLT LOCATION

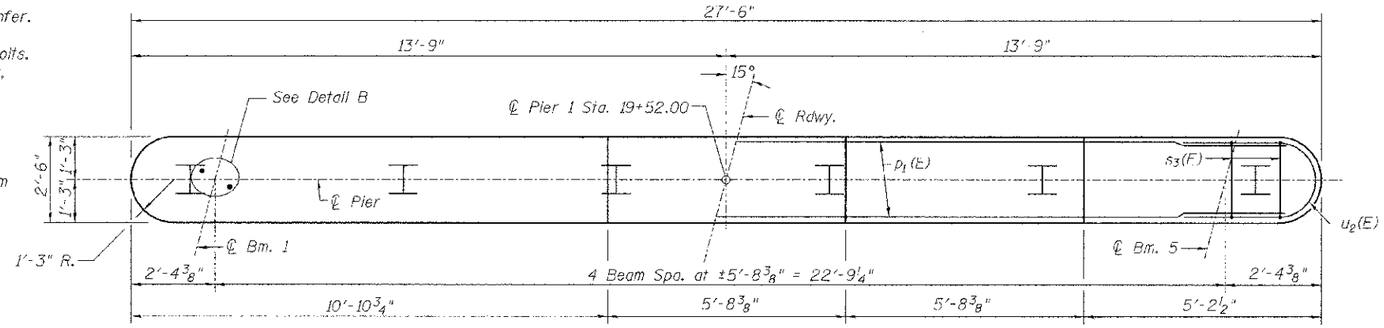

TOP PLAN

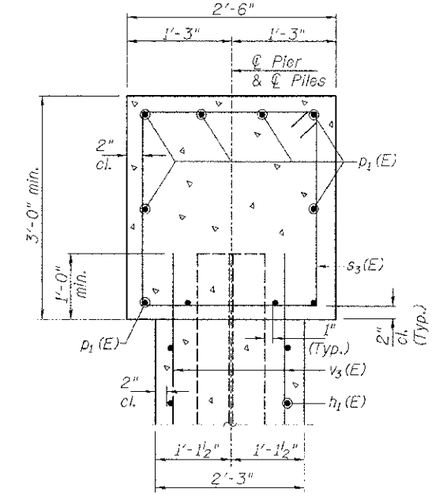

SECTION A-A

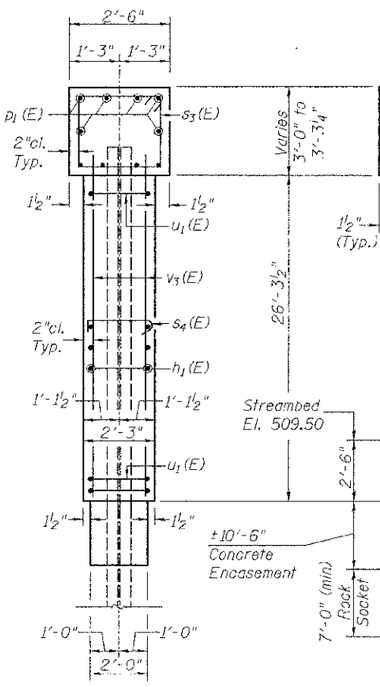

END VIEW

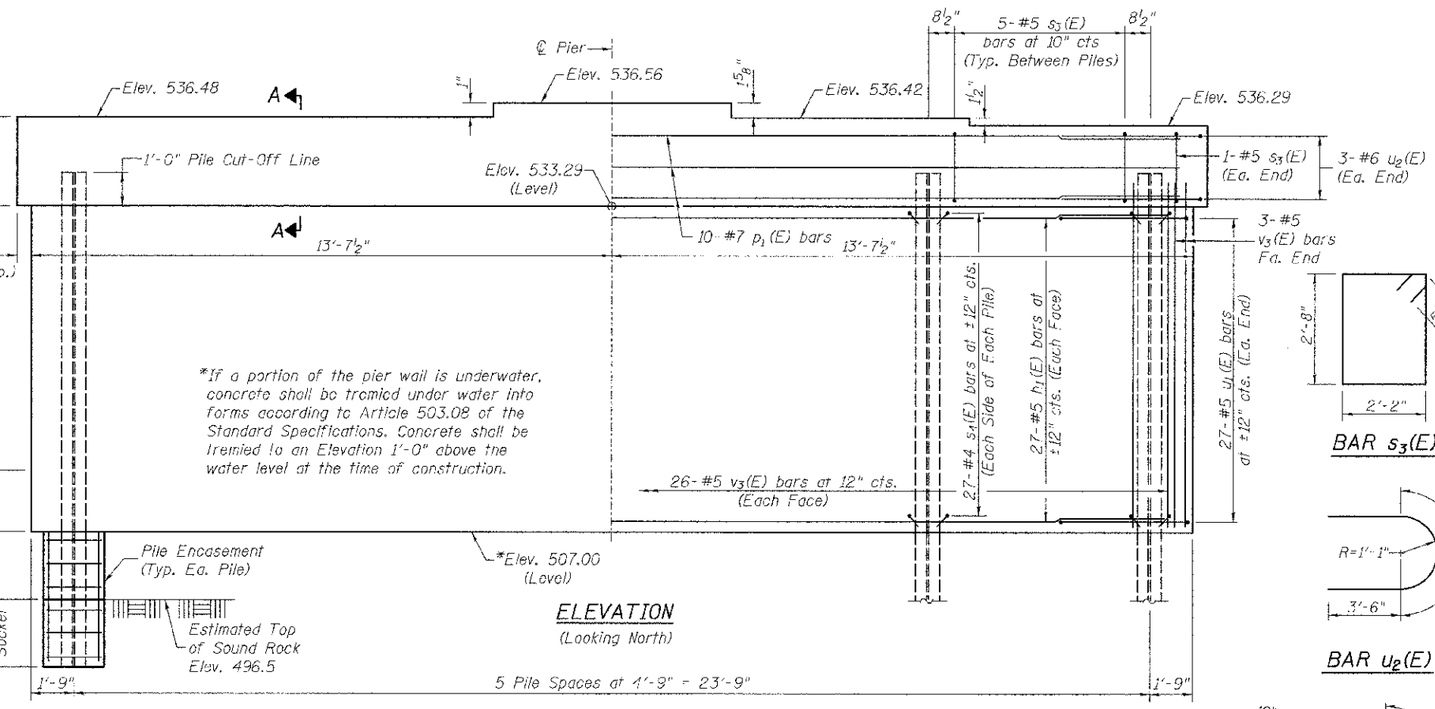

ELEVATION
(Looking North)

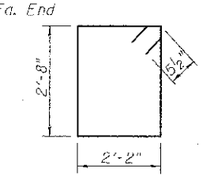

BAR s_3(E)

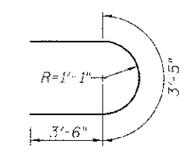

BAR u_2(E)

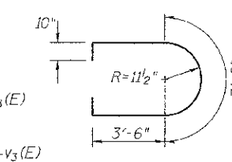

BAR u_1(E)

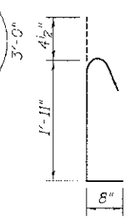

BAR s_4(E)

PIER #1
BILL OF MATERIAL

Bar	No.	Size	Length	Shape
h_1(E)	54	#5	25'-0"	
p_1(E)	10	#7	25'-0"	
s_3(E)	27	#5	10'-7"	
s_4(E)	324	#4	3'-0"	
u_1(E)	54	#5	11'-8"	
u_2(E)	6	#6	10'-5"	
v_3(E)	58	#5	27'-3"	

Concrete Structures	CU YD	66.5
Cofferdam Excavation	CU YD	45
Reinforcement Bars, Epoxy Coated	POUND	5,270
Furnishing Steel Piles HP12x63	FOOT	270
① Setting Piles in Rock	EACH	6
Concrete Encasement	CU YD	7.3
① Cofferdam (Type 1) (Location-1)	EACH	1

① See Special Provisions

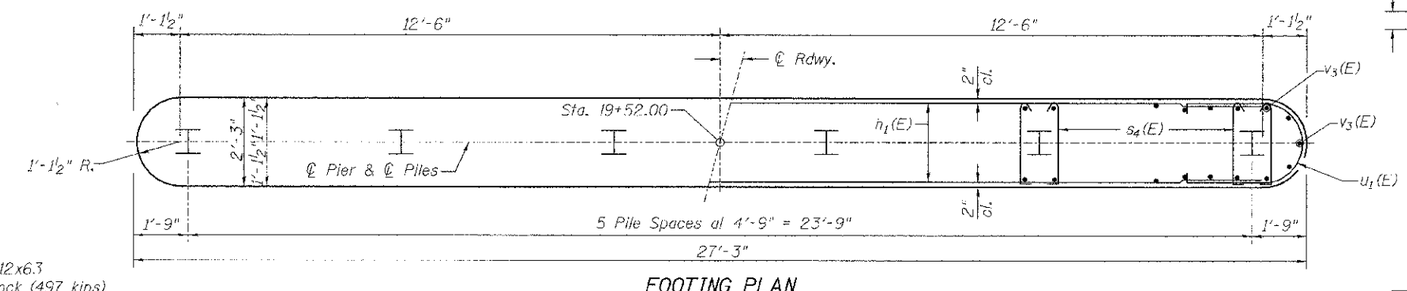

FOOTING PLAN

PILE DATA
Type & Size: Steel HP12x63
Nominal Required Bearing: Set in Rock (497 kips)
Factored Resistance Available: (273 kips)
Est. Length: 45'
No. Required: 6

PIER #1
C.H. 2 OVER SUGAR CREEK
SECTION 07-00073-00-BR
SCHUYLER COUNTY
STATION 20+00.00

SHEET NO. 15	ROUTE NO.	SECTION	COUNTY	TOTAL SHEETS	SHEET NO.
17 SHEETS	CH 2	07-00073-00-BR	SCHUYLER	35	21
	SN 085-3056		CONTRACT NO. 93584		
	FED. ROAD DIST. NO. 7	ILLINOIS	FED. AID PROJECT BRS-0455(07)		

2990b015

Notes:
All edges shall have standard $\frac{3}{4}$" chamfer.
Pour steps monolithically with cap.
Space reinforcement to miss anchor bolts.
See Sh. 17 of 17 for pile, rock socket, and concrete encasement details.

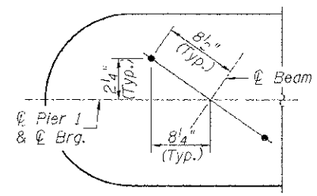

DETAIL B
ANCHOR BOLT LOCATION

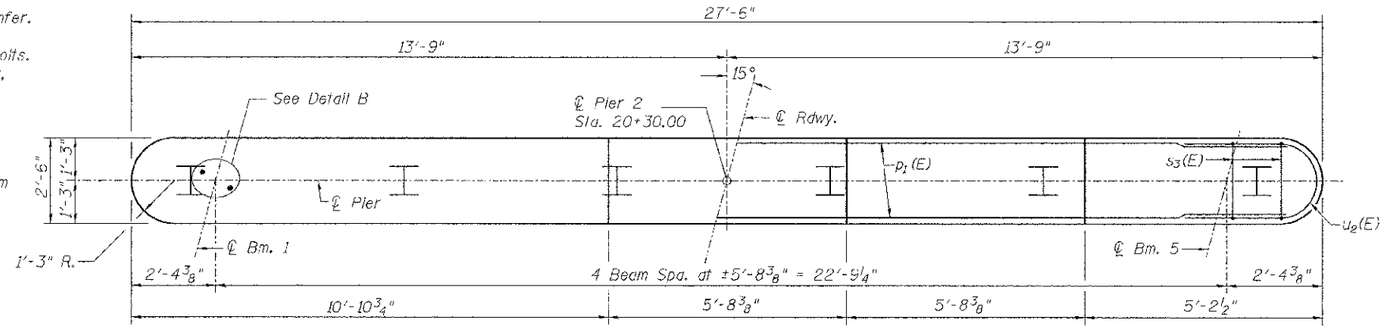

TOP PLAN

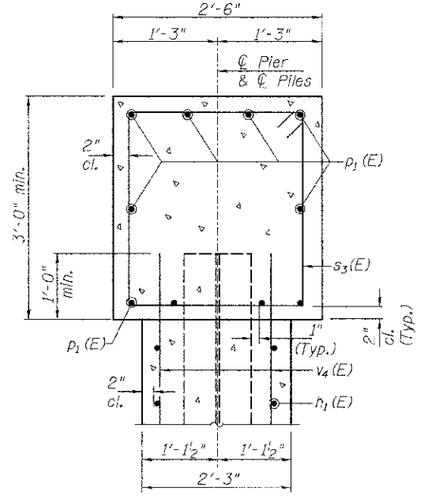

SECTION A-A

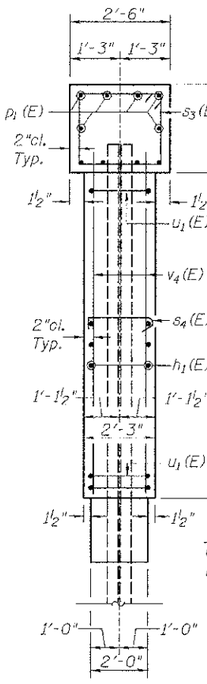

END VIEW

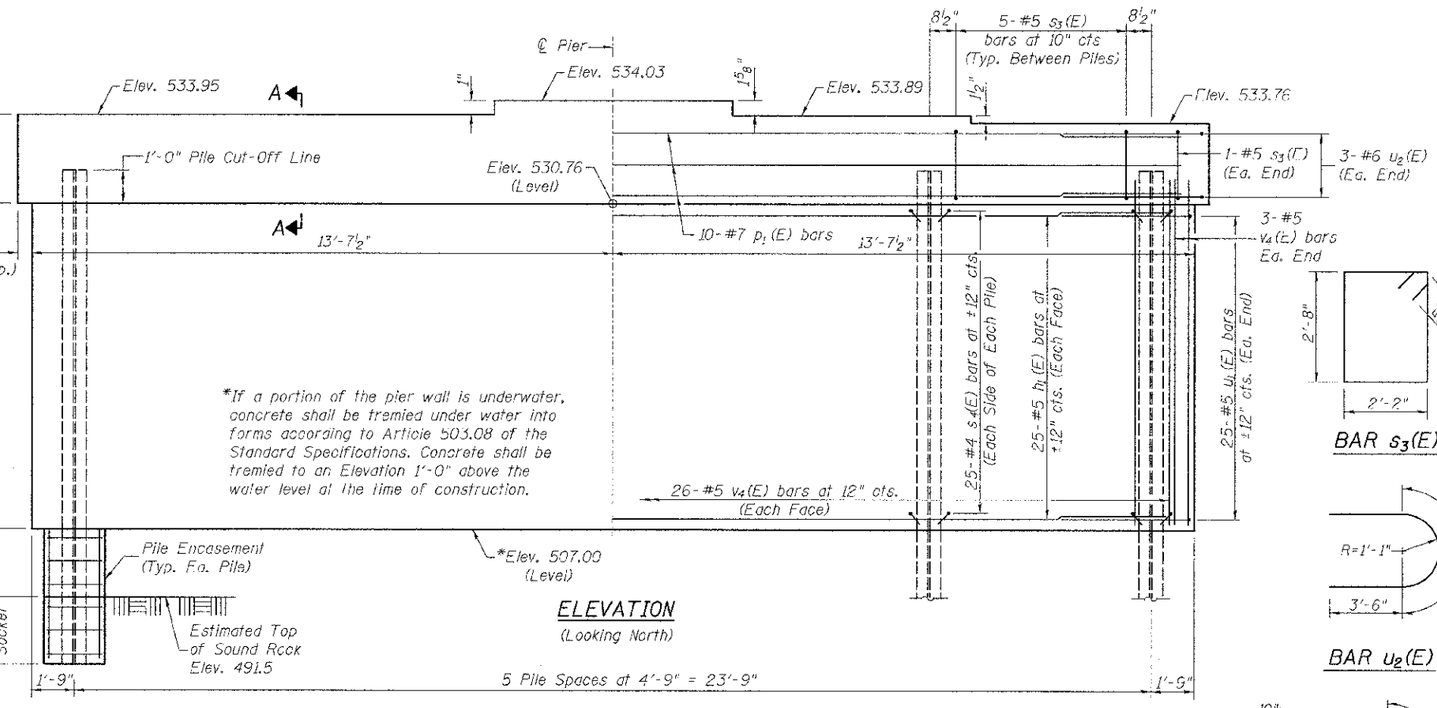

ELEVATION
(Looking North)

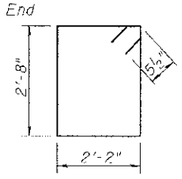

BAR s_3(E)

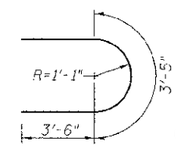

BAR u_2(E)

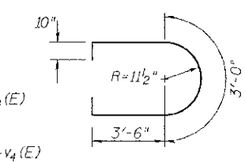

BAR u_1(E)

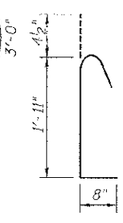

BAR s_4(E)

PIER #2
BILL OF MATERIAL

Bar	No.	Size	Length	Shape
h_1(E)	50	#5	25'-0"	
p_1(E)	10	#7	25'-0"	
s_3(E)	27	#5	10'-7"	
s_4(E)	300	#4	3'-0"	
u_1(E)	50	#5	11'-8"	
u_2(E)	6	#6	10'-5"	
v_4(E)	58	#5	24'-9"	
Concrete Structures			CU YD	60.9
Cofferdam Excavation			CU YD	40
Reinforcement Bars, Epoxy Coated			POUND	4,910
Furnishing Steel Piles HP12x63			FOOT	288
① Setting Piles in Rock			EACH	6
Concrete Encasement			CU YD	10.8
① Cofferdam (Type 1) (Location-2)			EACH	1

①See Special Provisions

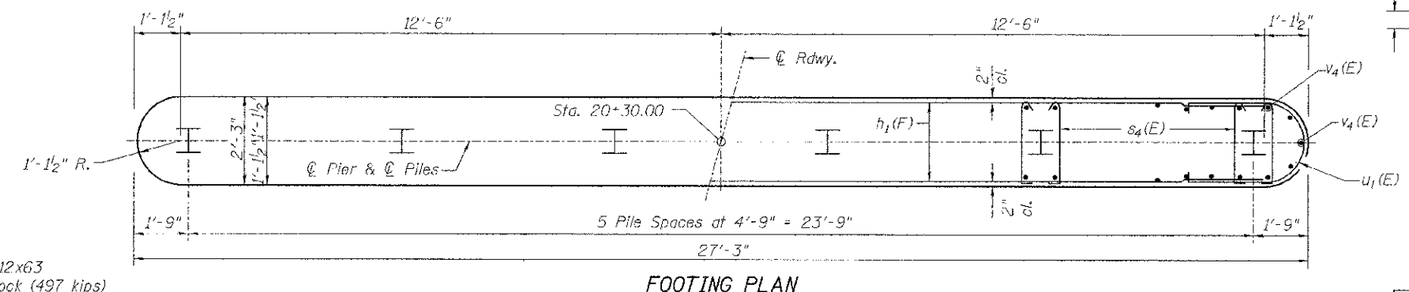

FOOTING PLAN

PILE DATA
Type & Size: Steel HP12x63
Nominal Required Bearing: Set in Rock (497 kips)
Factored Resistance Available: (273 kips)
Est. Length: 48'
No. Required: 6

PIER #2
C.H. 2 OVER SUGAR CREEK
SECTION 07-00073-00-BR
SCHUYLER COUNTY
STATION 20+00.00

SHEET NO. 16	ROUTE NO.	SECTION	COUNTY	TOTAL SHEETS	SHEET NO.
17 SHEETS	CH 2	07-00073-00-BR	SCHUYLER	35	22
	SN 085-3056		CONTRACT NO. 93584		
	FED. ROAD DIST. NO. 7	ILLINOIS	FED. AID PROJECT BRS-0455(107)		

2990b016

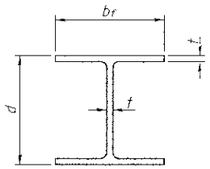

STEEL PILE TABLE

Designation	Depth d	Flange width b_f	Web and Flange thickness t	Encasement diameter
HP 14x117	14 1/4"	14 7/8"	13/16"	30"
x102	14"	14 3/4"	11/16"	30"
x89	13 7/8"	14 3/4"	5/8"	30"
x73	13 5/8"	14 5/8"	1/2"	30"
HP 12x84	12 1/4"	12 1/4"	11/16"	24"
x74	12 1/8"	12 1/4"	5/8"	24"
x63	12"	12 1/8"	1/2"	24"
x53	11 3/4"	12"	7/16"	24"
HP 10x57	10"	10 1/4"	9/16"	24"
x42	9 3/4"	10 1/8"	7/16"	24"
HP 8x36	8"	8 1/8"	7/16"	18"

Note:
The steel H-piles shall be according to AASHTO M270 Grade 50.

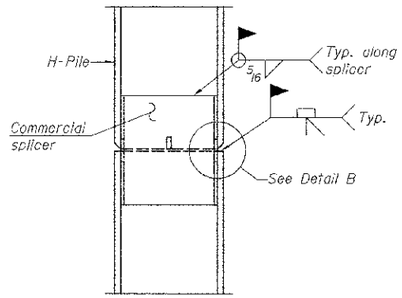

ELEVATION

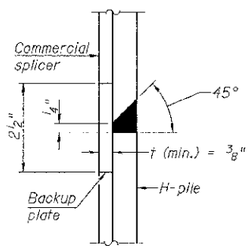

DETAIL "B"

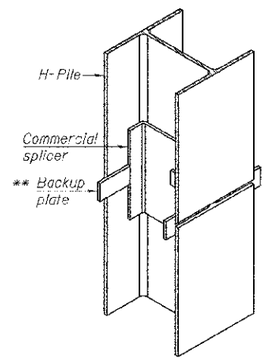

ISOMETRIC VIEW

WELDED COMMERCIAL SPLICE

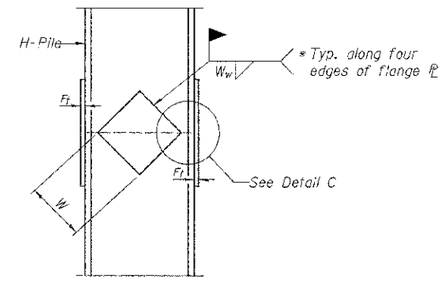

ELEVATION

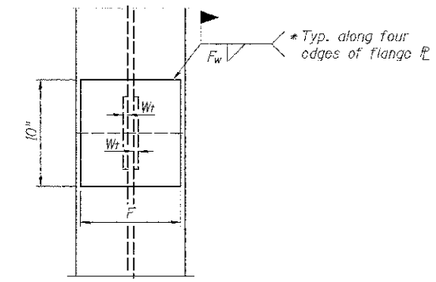

END VIEW

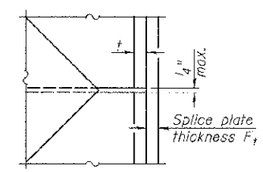

DETAIL C

Designation	F	F_t	F_w	W	W_f	W_w
HP 14x117	12 1/2"	1"	7/8"	7 3/4"	5/8"	1/2"
x102	12 1/2"	7/8"	3/4"	7 3/4"	5/8"	1/2"
x89	12 1/2"	3/4"	11/16"	7 3/4"	5/8"	1/2"
x73	12 1/2"	5/8"	9/16"	7 3/4"	5/8"	1/2"
HP 12x84	10"	7/8"	11/16"	6 1/2"	5/8"	1/2"
x74	10"	7/8"	11/16"	6 1/2"	5/8"	1/2"
x63	10"	5/8"	1/2"	6 1/2"	1/2"	3/8"
x53	10"	5/8"	1/2"	6 1/2"	1/2"	3/8"
HP 10x57	8"	3/4"	9/16"	5 1/4"	1/2"	3/8"
x42	8"	5/8"	9/16"	5 1/4"	1/2"	3/8"
HP 8x36	7"	5/8"	7/16"	4 1/4"	1/2"	3/8"

WELDED PLATE FIELD SPLICE

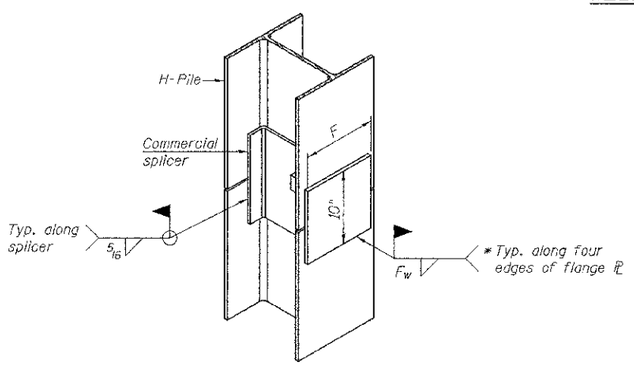

ISOMETRIC VIEW

WELDED COMMERCIAL SPLICE ALTERNATE

* Interrupt welds 1/4" from end of web and/or each flange.

** Remove portions of backup plates that extend outside the flanges.

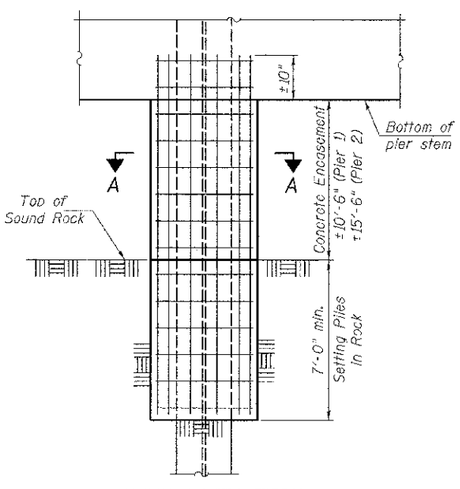

PIER ELEVATION

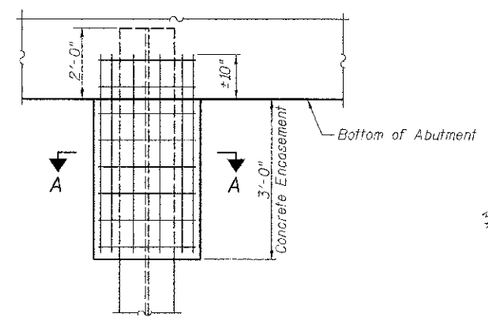

ABUTMENT ELEVATION

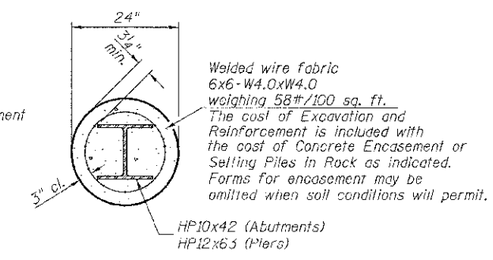

SECTION A-A

PILE ENCASEMENT

HP PILE DETAILS
C.H. 2 OVER SUGAR CREEK
SECTION 07-00073-00-BR
SCHUYLER COUNTY
STATION 20+00.00

SHEET NO. 17	ROUTE NO.	SECTION	COUNTY	TOTAL SHEETS	SHEET NO.
	CH 2	07-00073-00-BR	SCHUYLER	35	23
17 SHEETS	SN 085-3056		CONTRACT NO. 93584		
	FED. ROAD DIST. NO. 7	ILLINOIS	FED. AID PROJECT BRS-0455(107)		

2990b017

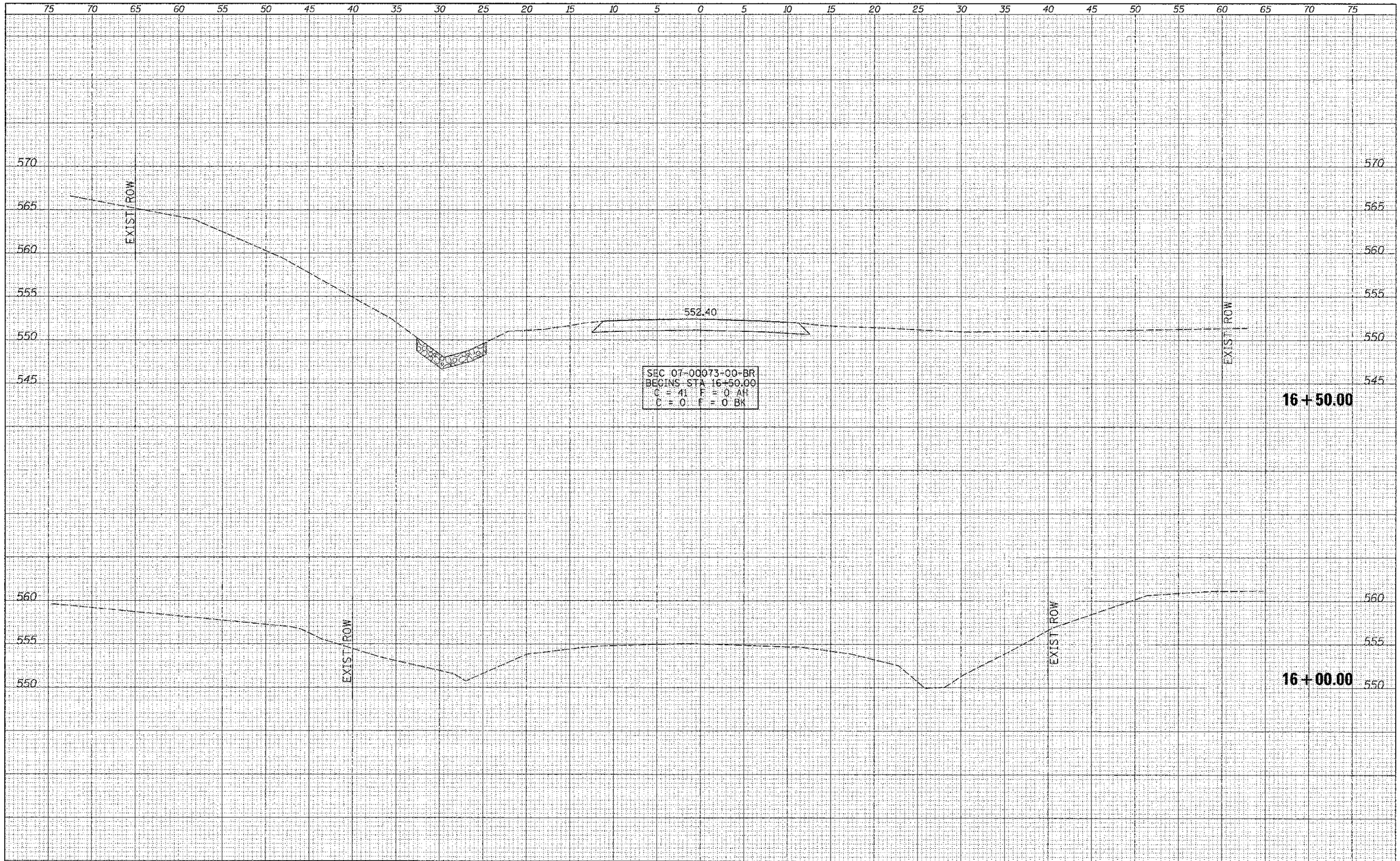

FINAL SURVEY	BY	DATE
SURVEYED		
PLOTTED		
TEMPLATE		
AREAS		
AREAS CHECKED		
NOTE BOOK		
NO.		

ORIGINAL SURVEY	BY	DATE
SURVEYED		
PLOTTED		
TEMPLATE		
AREAS		
AREAS CHECKED		
NOTE BOOK		
NO.		

FILE NAME = V:\Bridge\2990 - Schuyler\2990xs-ts.dgn	USER NAME = ethomas	DESIGNED -	REVISED -
		DRAWN -	REVISED -
	PLOT SCALE = 5.0000 ' / in.	CHECKED	REVISED -
XS.SHEET	PLOT DATE = 7/24/2012	DATE -	REVISED -

SCHUYLER COUNTY
COUNTY HIGHWAY 2
OVER SUGAR CREEK

CROSS SECTIONS

SCALE: 1"=5' | SHEET 1 OF 12 SHEETS | STA. 16+00.00 TO STA. 16+50.00

F.A.S. RTE.	SECTION	COUNTY	TOTAL SHEETS	SHEET NO.
455	07-00073-00-BR	SCHUYLER	35	24

CONTRACT NO. 93584

FED. ROAD DIST. NO. 7 | ILLINOIS | FED. AID PROJECT BRS-0455(107)

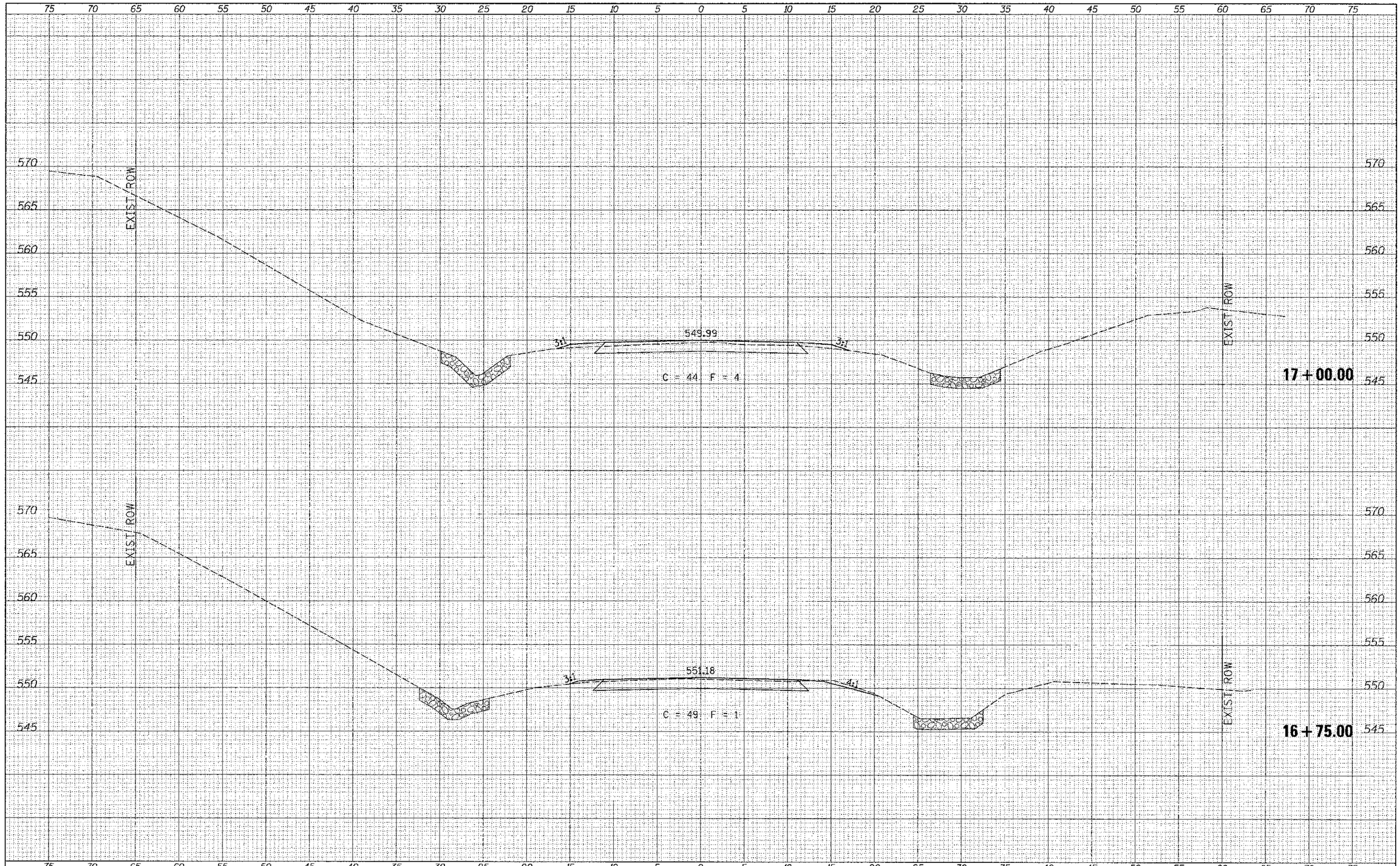

FINAL SURVEY	BY	DATE
NOTE BOOK	SURVEYED	
	PLOTTED	
	TEMPLATE	
	AREAS	
NO.	AREAS CHECKED	

ORIGINAL SURVEY	BY	DATE
NOTE BOOK	SURVEYED	
	PLOTTED	
	TEMPLATE	
	AREAS	
NO.	AREAS CHECKED	

FILE NAME = W:\Bridge\2990 - Schuyler\2990xsht.dgn	USER NAME = cthomas	DESIGNED -	REVISED -
		DRAWN -	REVISED -
	PLOT SCALE = 5.0000 ' / in.	CHECKED -	REVISED -
XS_SHEET	PLOT DATE = 7/24/2012	DATE -	REVISED -

SCHUYLER COUNTY
COUNTY HIGHWAY 2
OVER SUGAR CREEK

CROSS SECTIONS

SCALE: 1"=5' | SHEET 2 OF 12 SHEETS | STA. 16+75.00 TO STA. 17+00.00

F.A.S. RTE.	SECTION	COUNTY	TOTAL SHEETS	SHEET NO.
455	07-00073-00-BR	SCHUYLER	35	25

CONTRACT NO. 93584

FED. ROAD DIST. NO. 7 | ILLINOIS | FED. AID PROJECT BRS-0455(107)

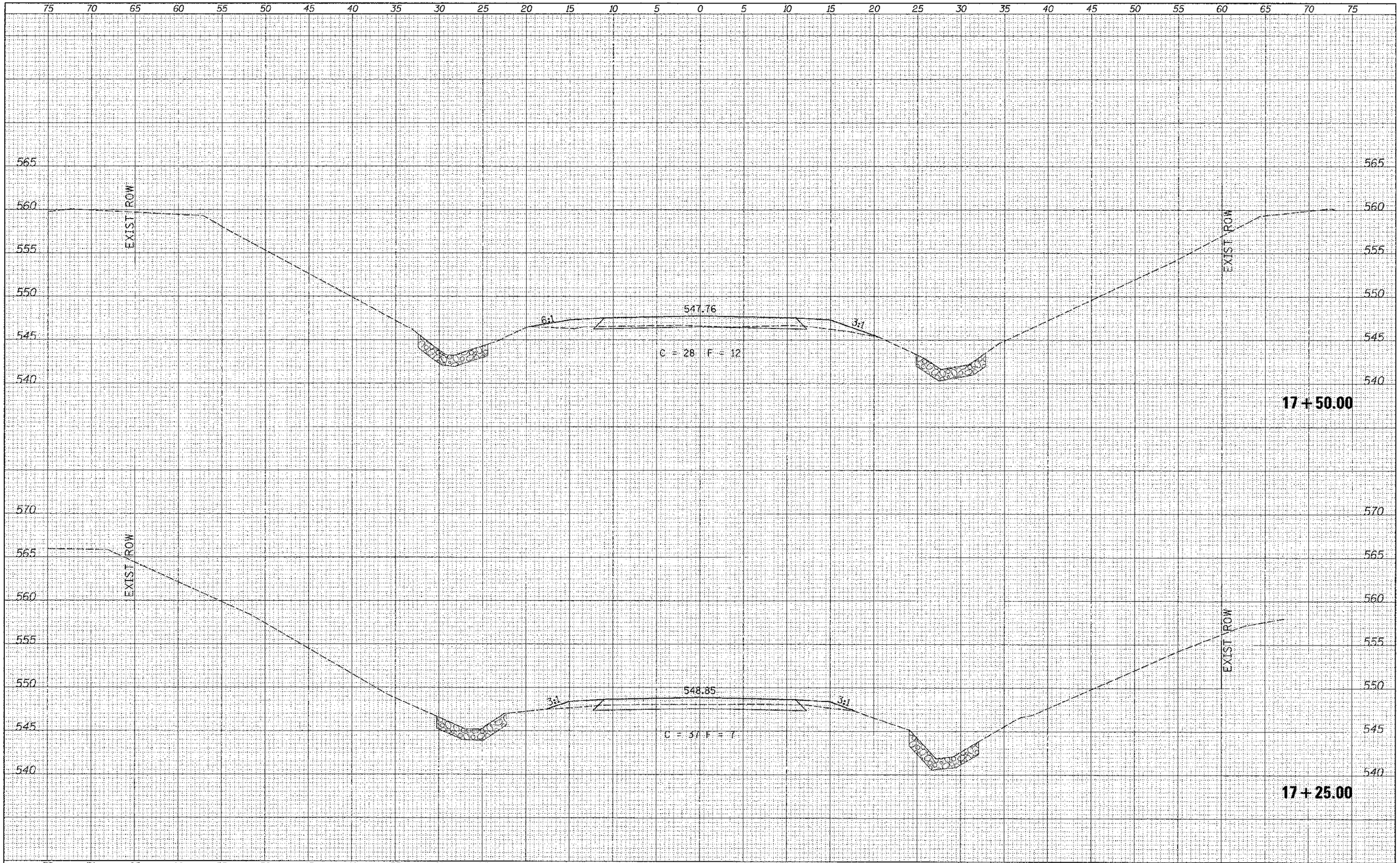

FINAL SURVEY	BY	DATE
SURVEYED		
PLOTTED		
TEMPLATE		
AREAS		
AREAS CHECKED		
NOTE BOOK NO.		

ORIGINAL SURVEY	BY	DATE
SURVEYED		
PLOTTED		
TEMPLATE		
AREAS		
AREAS CHECKED		
NOTE BOOK NO.		

FILE NAME = V:\Bridge\2990 - Schuyler\2990xshtsdgn	USER NAME = sthomas	DESIGNED -	REVISED -
		DRAWN -	REVISED -
	PLOT SCALE = 5.0020 ' / in.	CHECKED -	REVISED
XS_SHEET	PLOT DATE = 7/24/2012	DATE -	REVISED -

SCHUYLER COUNTY
COUNTY HIGHWAY 2
OVER SUGAR CREEK

CROSS SECTIONS

SCALE: 1"=5' | SHEET 3 OF 12 SHEETS | STA. 17+25.00 TO STA. 17+50.00

F.A.S. RTE.	SECTION	COUNTY	TOTAL SHEETS	SHEET NO.
455	07-00073-00-BR	SCHUYLER	35	26

CONTRACT NO. 93584

FED. ROAD DIST. NO. 7 | ILLINOIS | FED. AID PROJECT BRS-0455(107)

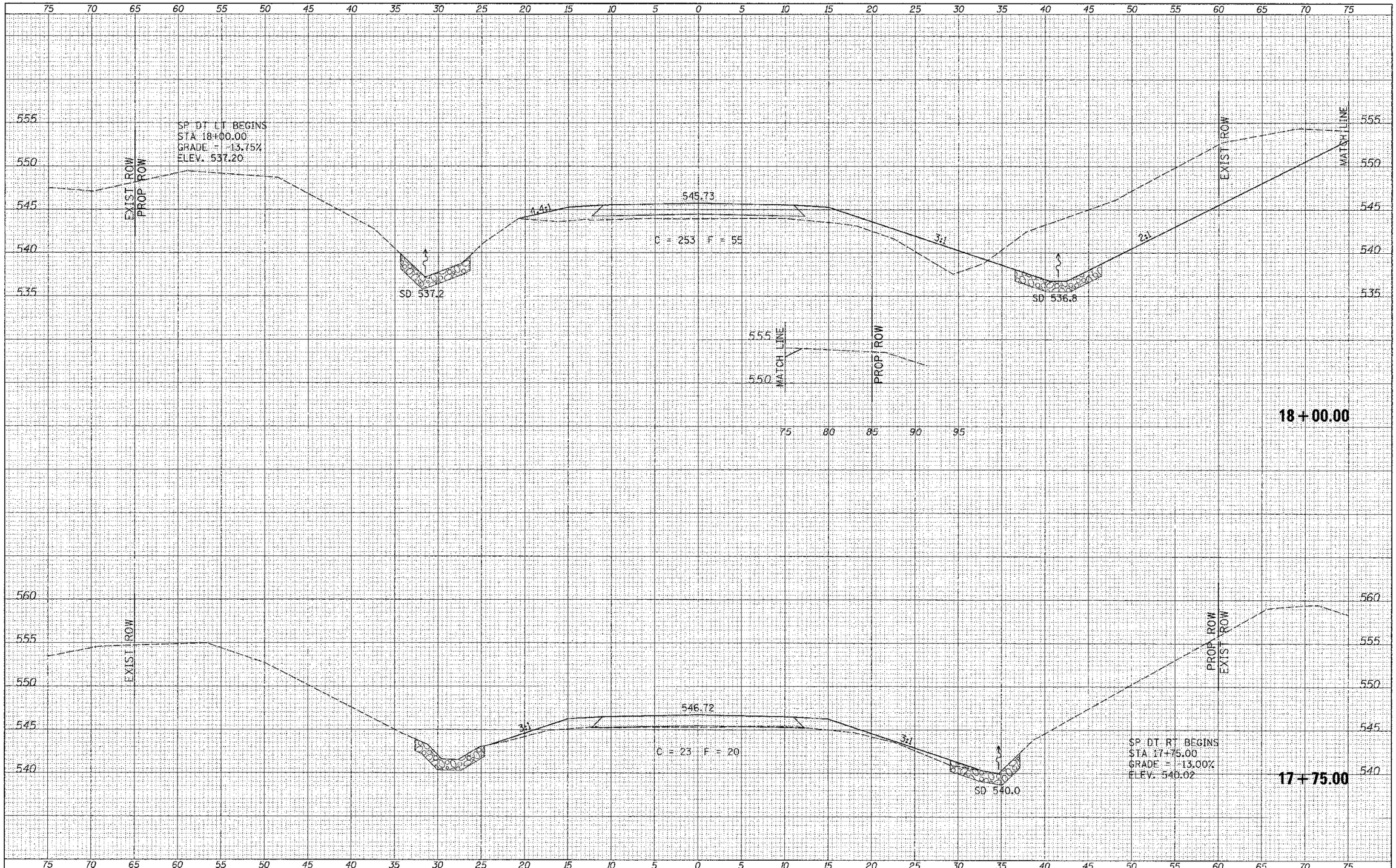

FILE NAME =	USER NAME = cthomas	DESIGNED -	REVISED -
V:\Bridge\2998 - Schuyler\2998xshts.dgn		DRAWN -	REVISED -
	PLOT SCALE = 5.0000 ' / in.	CHECKED -	REVISED -
XS_SHEET	PLOT DATE = 7/24/2012	DATE -	REVISED -

SCHUYLER COUNTY
COUNTY HIGHWAY 2
OVER SUGAR CREEK

CROSS SECTIONS

SCALE: 1"=5' | SHEET 4 OF 12 SHEETS | STA. 17+75.00 TO STA. 18+00.00

F.A.S. RTE.	SECTION	COUNTY	TOTAL SHEETS	SHEET NO.
455	07-00073-00-BR	SCHUYLER	35	27

CONTRACT NO. 93584

FED. ROAD DIST. NO. 7 | ILLINOIS | FED. AID PROJECT BRS-0455(107)

FINAL SURVEY	SURVEYED	BY	DATE
	PLOTTED		
NOTE BOOK	TEMPLATE		
	AREAS		
NO.	AREAS CHECKED		

ORIGINAL SURVEY	SURVEYED	BY	DATE
	PLOTTED		
NOTE BOOK	TEMPLATE		
	AREAS		
NO.	AREAS CHECKED		

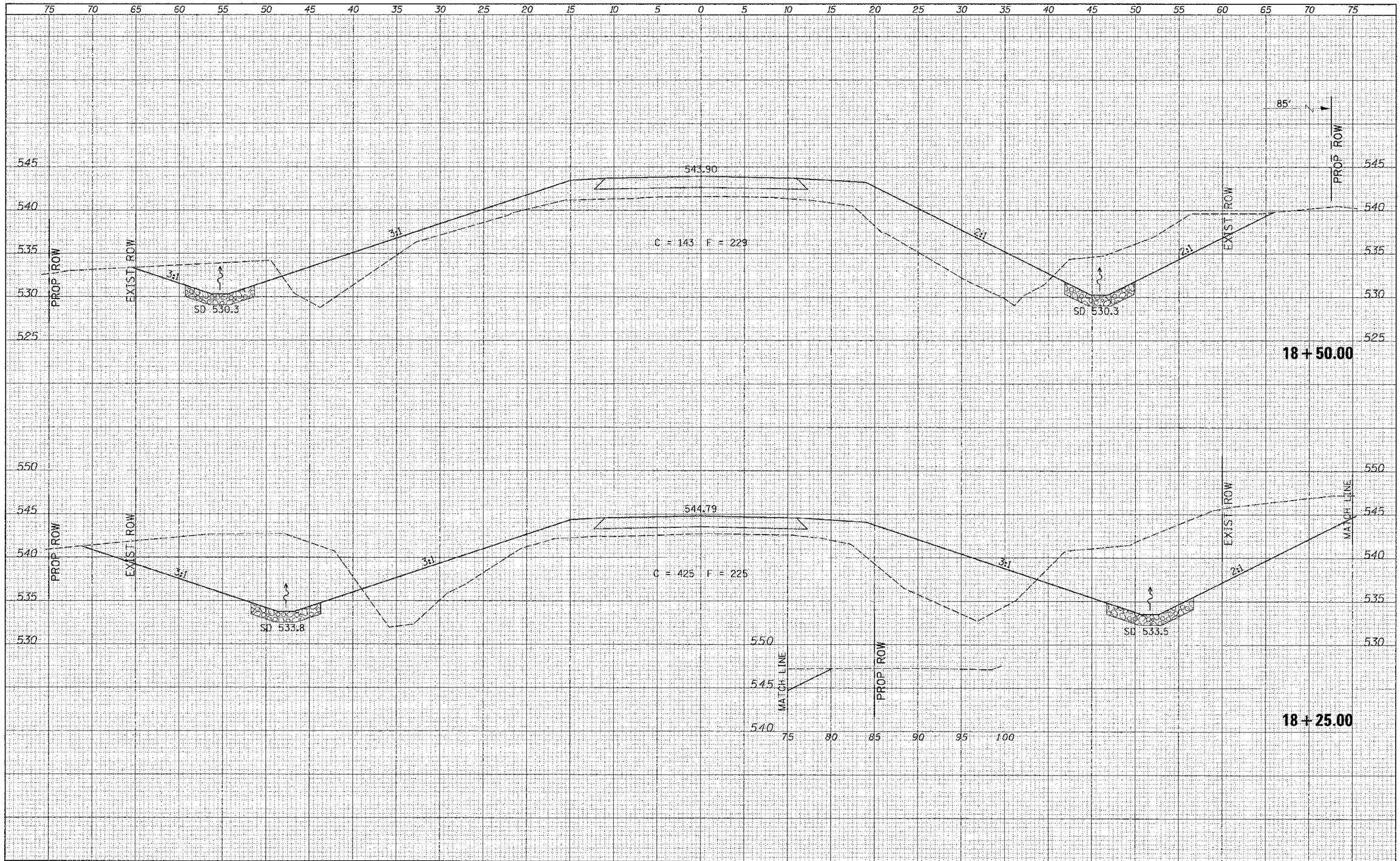

FINAL SURVEY		BY	DATE
NOTE BOOK	SURVEYED		
	PLOTTED		
	TEMPLATE		
	AREAS		
NO.	AREAS CHECKED		

ORIGINAL SURVEY		BY	DATE
NOTE BOOK	SURVEYED		
	PLOTTED		
	TEMPLATE		
	AREAS		
NO.	AREAS CHECKED		

FILE NAME = W:\Bridge\2990 - Schuyler\2990xsltsdgn	USER NAME = cthomas	DESIGNED -	REVISED -
		DRAWN -	REVISED -
	PLOT SCALE = 5.0000 ' / in.	CHECKED -	REVISED -
XS_SHEET	PLOT DATE = 7/24/2012	DATE -	REVISED -

SCHUYLER COUNTY
COUNTY HIGHWAY 2
OVER SUGAR CREEK

CROSS SECTIONS

SCALE: 1"=5' | SHEET 5 OF 12 SHEETS | STA. 18+25.00 TO STA. 18+50.00

F.A.S. RTE.	SECTION	COUNTY	TOTAL SHEETS	SHEET NO.
455	07-00073-00-BR	SCHUYLER	35	28
		CONTRACT NO. 93584		

FED. ROAD DIST. NO. 7 | ILLINOIS | FED. AID PROJECT BRS-0455(107)

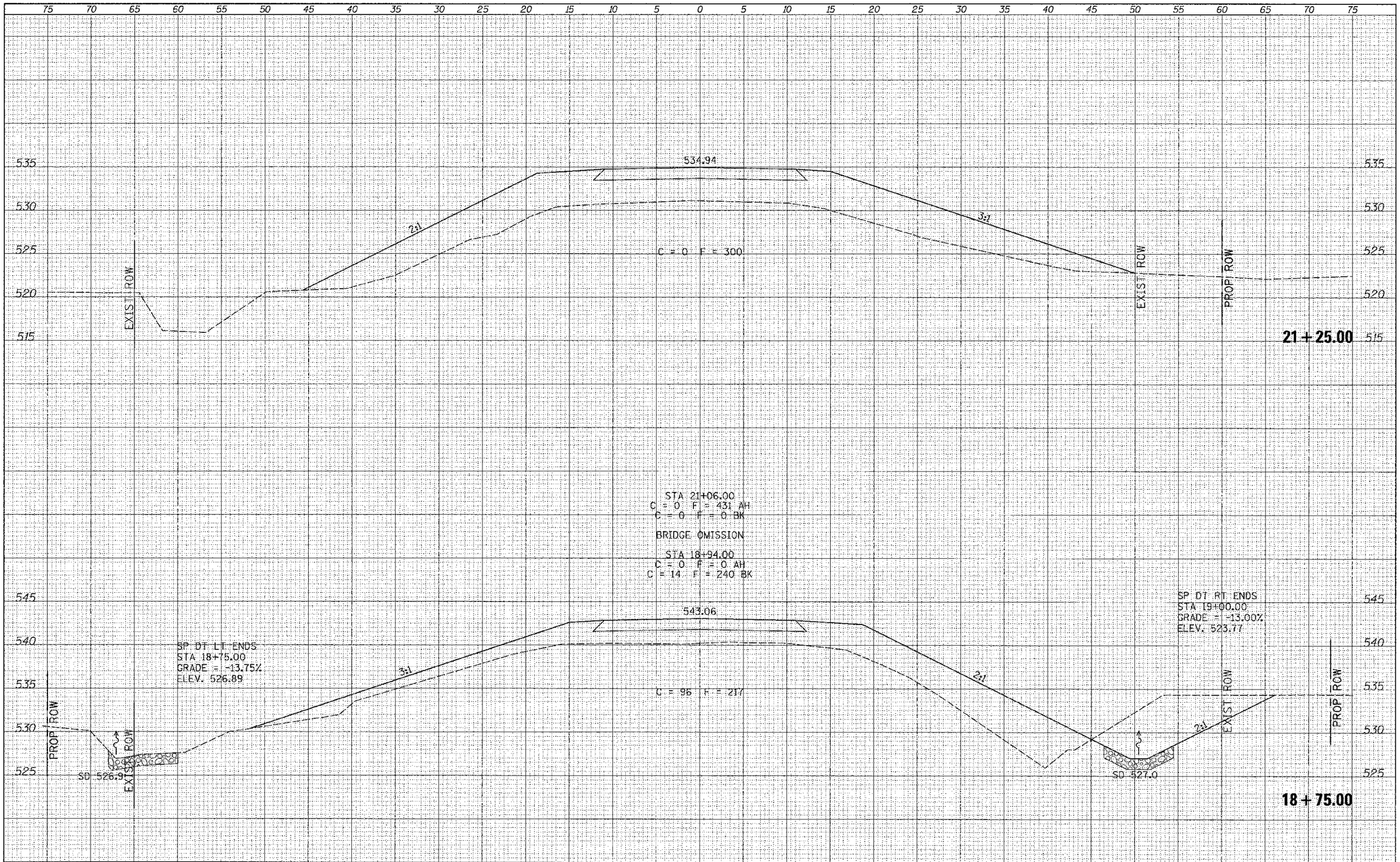

FILE NAME = V:\Drudge\2910 Schuyler\2910xsht6.dgn	USER NAME = cthomas	DESIGNED -	REVISED -	SCHUYLER COUNTY COUNTY HIGHWAY 2 OVER SUGAR CREEK	CROSS SECTIONS	F.A.S. RTE.	SECTION	COUNTY	TOTAL SHEETS	SHEET NO.
		DRAWN -	REVISED -			455	07-00073-00-BR	SCHUYLER	35	29
	PLOT SCALE = 5.0000 ' / in.	CHECKED -	REVISED -					CONTRACT NO. 93584		
XS_SHEET	PLOT DATE = 7/24/2012	DATE -	REVISED -		SCALE: 1"=5' / SHEET 6 OF 12 SHEETS / STA. 18+75.00 TO STA. 21+25.00	FED. ROAD DIST. NO. 7	ILLINOIS	FED. AID PROJECT BRS-0455(007)		

FINAL SURVEY	BY	DATE
NOTE BOOK	SURVEYED	
	PLOTTED	
	TEMPLATE	
	AREAS	
NO.	AREAS CHECKED	

ORIGINAL SURVEY	BY	DATE
NOTE BOOK	SURVEYED	
	PLOTTED	
	TEMPLATE	
	AREAS	
NO.	AREAS CHECKED	

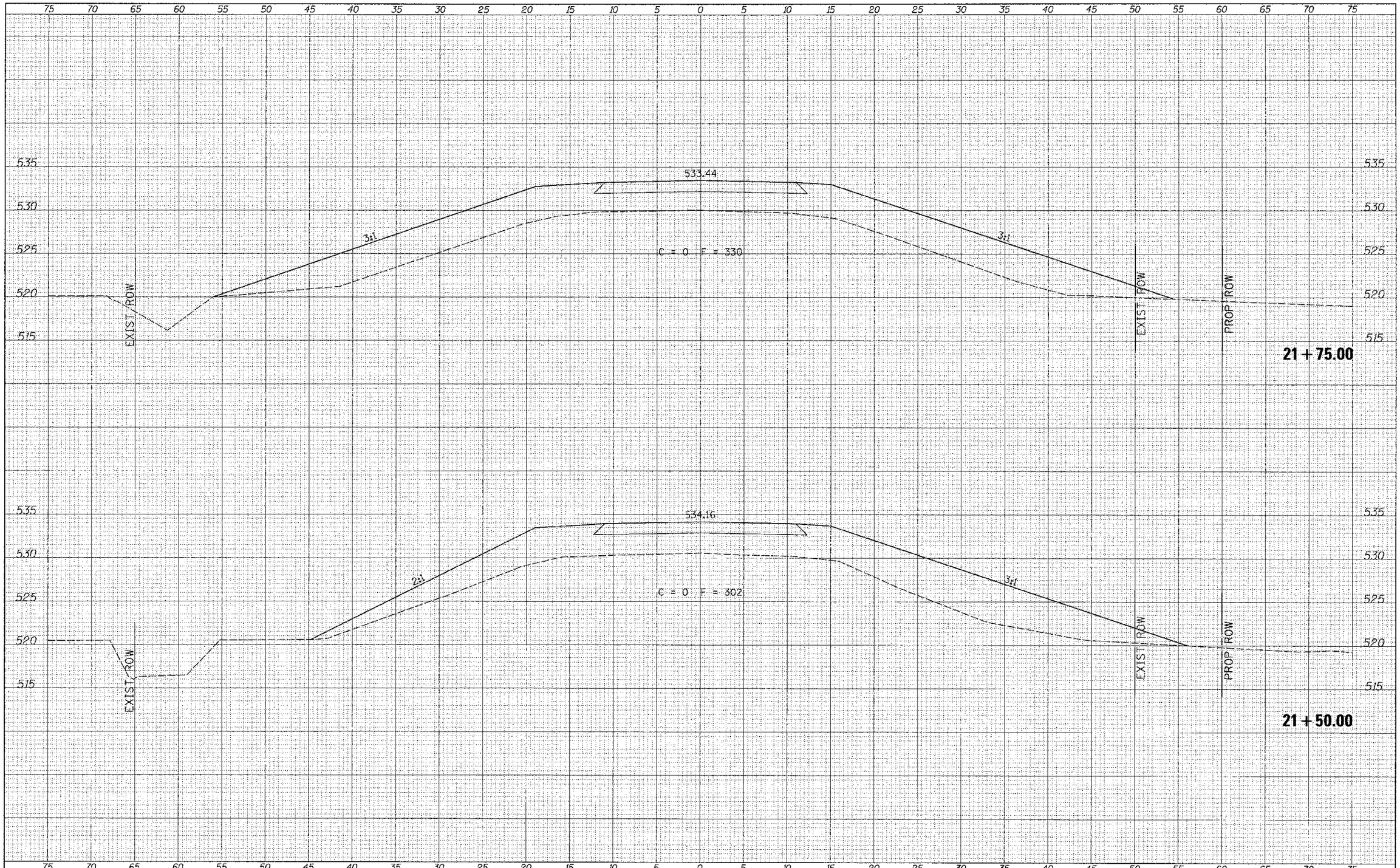

FINAL SURVEY	BY	DATE
NOTE BOOK NO.	SURVEYED	
	PLOTTED	
	TEMPLATE	
	AREAS	
	AREAS CHECKED	

ORIGINAL SURVEY	BY	DATE
NOTE BOOK NO.	SURVEYED	
	PLOTTED	
	TEMPLATE	
	AREAS	
	AREAS CHECKED	

FILE NAME = V:\Bridge\2990 - Schuyler\2990xshts.dgn	USER NAME = cthomas	DESIGNED -	REVISED -
		DRAWN -	REVISED -
	PLOT SCALE = 5.0000 ' / in.	CHECKED -	REVISED -
XS_SHEET	PLOT DATE = 7/24/2012	DATE -	REVISED -

SCHUYLER COUNTY
COUNTY HIGHWAY 2
OVER SUGAR CREEK

CROSS SECTIONS

SCALE: 1"=5' | SHEET 7 OF 12 SHEETS | STA. 21+50.00 TO STA. 21+75.00

F.A.S. RTE.	SECTION	COUNTY	TOTAL SHEETS	SHEET NO.
455	07-00073-00-BR	SCHUYLER	35	30

CONTRACT NO. 93584

FED. ROAD DIST. NO. 7 ILLINOIS | FED. AID PROJECT BRS-0455(107)

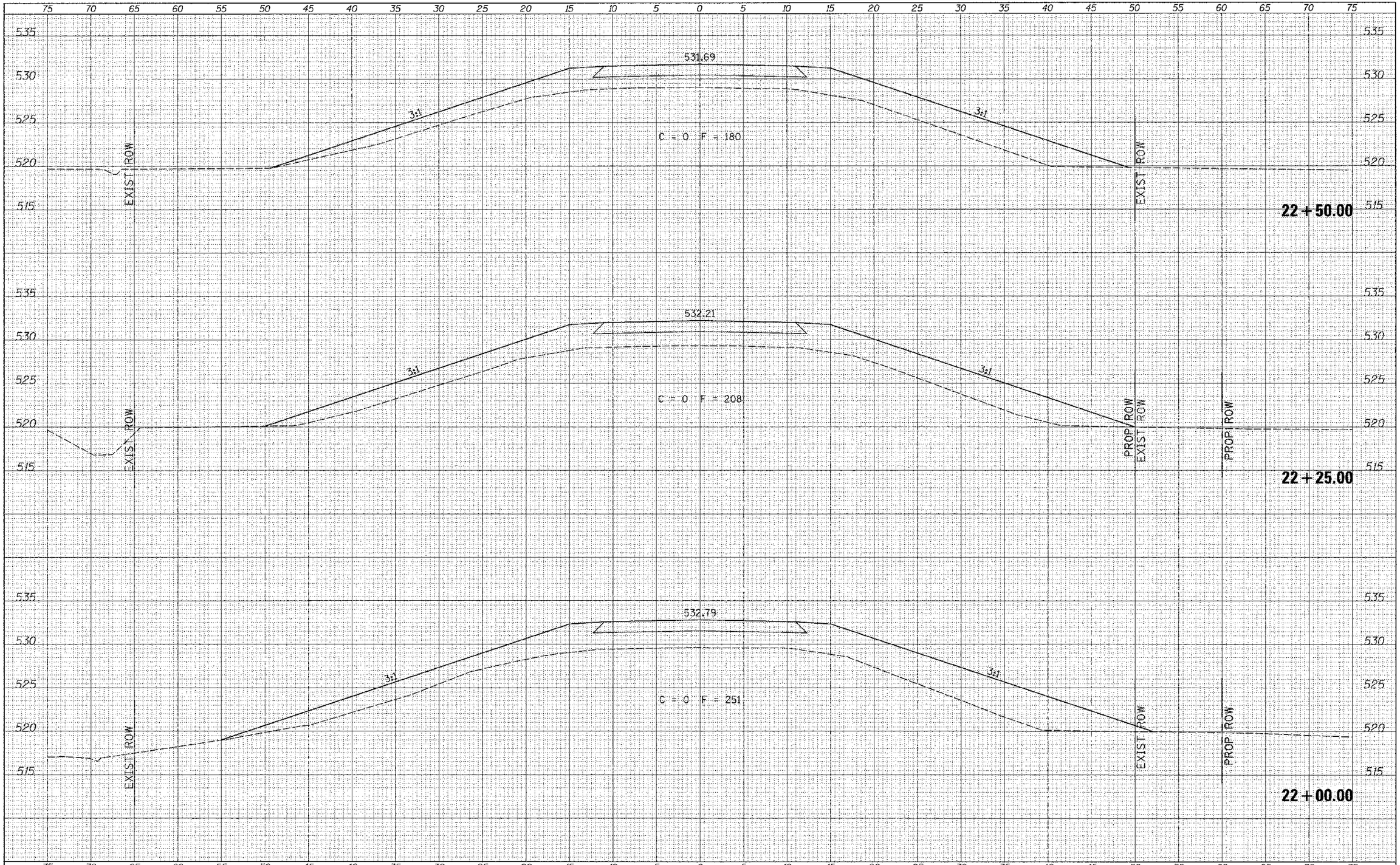

FILE NAME =	USER NAME = cthomas	DESIGNED -	REVISED -
V:\Bridge\2990 - Schuyler\2990xshts.dgn		DRAWN -	REVISED -
	PLOT SCALE = 5.0000 ' / in.	CHECKED -	REVISED -
XS_SHEET	PLOT DATE = 7/24/2012	DATE -	REVISED -

SCHUYLER COUNTY
COUNTY HIGHWAY 2
OVER SUGAR CREEK

CROSS SECTIONS

SCALE: 1"=5' | SHEET 8 OF 12 SHEETS | STA. 22+00.00 TO STA. 22+50.00

F.A.S. RTE.	SECTION	COUNTY	TOTAL SHEETS	SHEET NO.
455	07-00073-00-BR	SCHUYLER	35	31
		CONTRACT NO. 93504		

FED. ROAD DIST. NO. 7 | ILLINOIS | FED. AID PROJECT BRS-0455(107)

FINAL SURVEY	SURVEYED	BY	DATE
	PLOTTED		
NOTE BOOK	TEMPLATE		
	AREAS		
NO.	AREAS CHECKED		

ORIGINAL SURVEY	SURVEYED	BY	DATE
	PLOTTED		
NOTE BOOK	TEMPLATE		
	AREAS		
NO.	AREAS CHECKED		

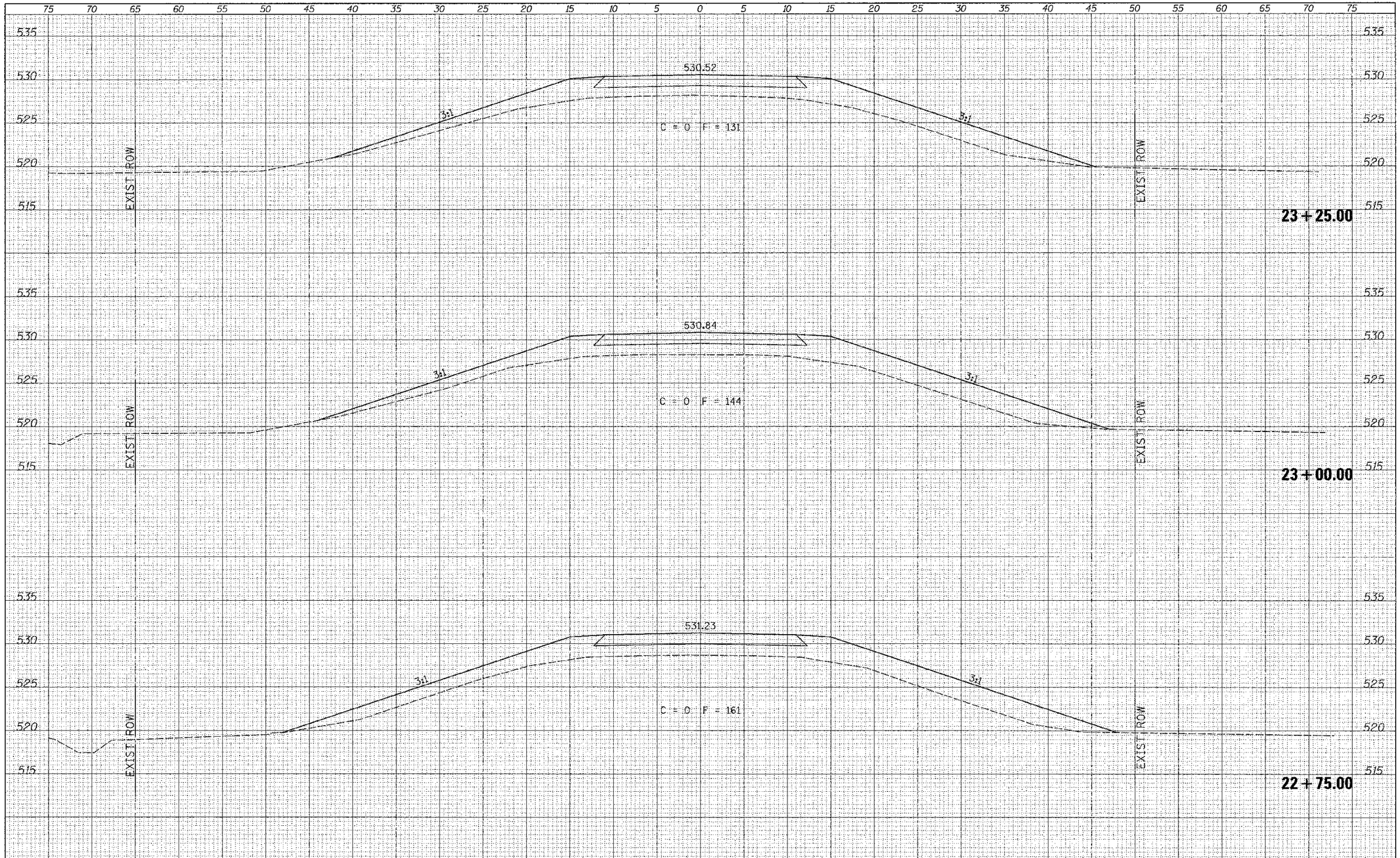

FINAL SURVEY	SURVEYED	BY	
	PLOTTED		
NOTE BOOK	TEMPLATE		
	AREAS		
NO.	AREAS CHECKED		

ORIGINAL SURVEY	SURVEYED	BY	
	PLOTTED		
NOTE BOOK	TEMPLATE		
	AREAS		
NO.	AREAS CHECKED		

FILE NAME = V:\Bridge\2990 - Schuyler\2990xsh1.dgn	USER NAME = athenes	DESIGNED -	REVISED -
		DRAWN -	REVISED -
	PLOT SCALE = 5.0000 ' / in.	CHECKED -	REVISED
XS.SHEET	PLOT DATE = 7/24/2012	DATE -	REVISED -

SCHUYLER COUNTY
COUNTY HIGHWAY 2
OVER SUGAR CREEK

CROSS SECTIONS

SCALE: 1"=5' | SHEET 9 OF 12 SHEETS | STA. 22+75.00 TO STA. 23+25.00

F.A.S. RTE.	SECTION	COUNTY	TOTAL SHEETS	SHEET NO.
455	07-00073-00-BR	SCHUYLER	35	32

CONTRACT NO. 93584

FED. ROAD DIST. NO. 7 ILLINOIS FED. AID PROJECT BRS-0455(107)

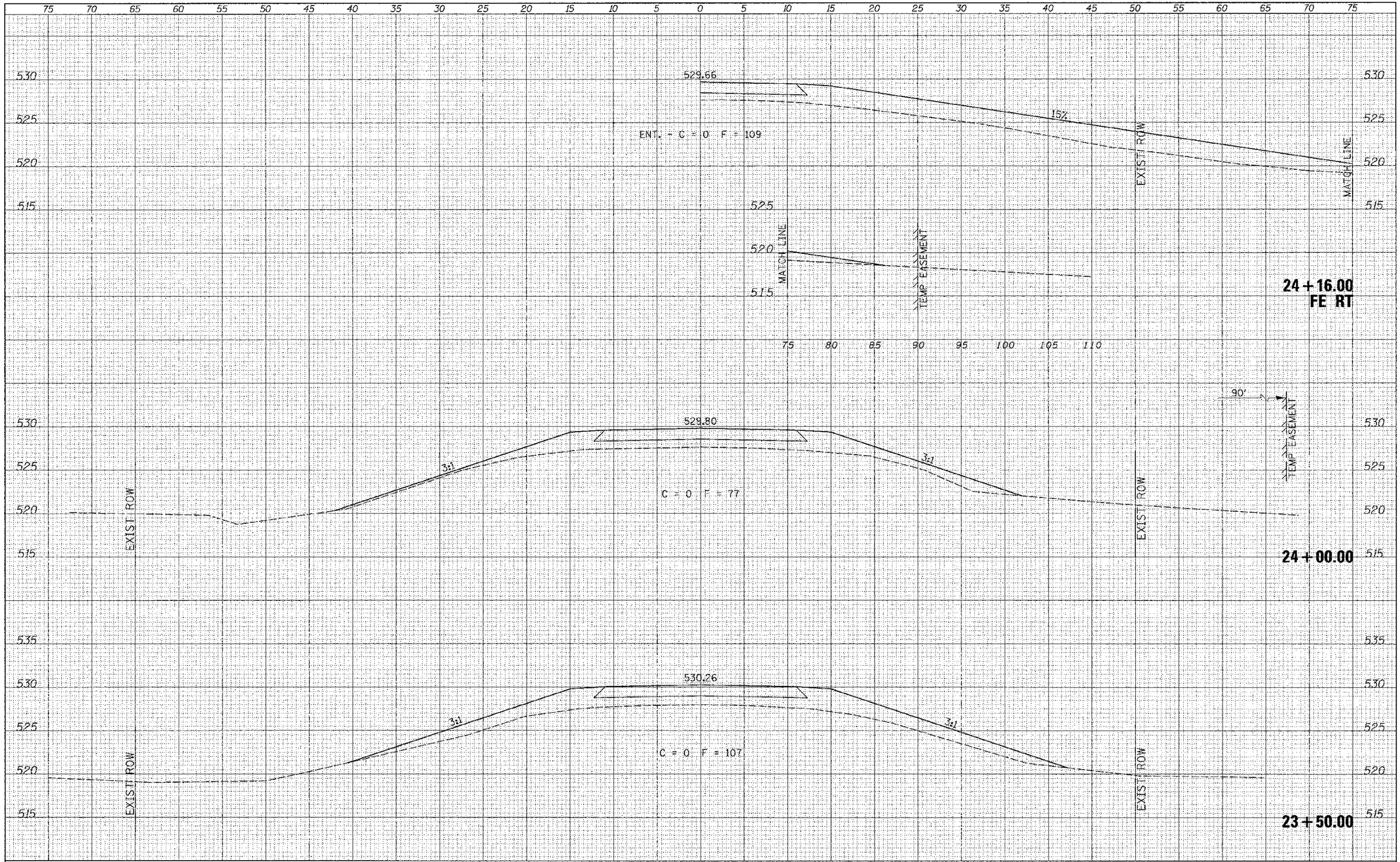

FINAL SURVEY		BY	DATE
NOTE BOOK NO.	SURVEYED		
	PLOTTED		
	TEMPLATE		
	AREAS		
	AREAS CHECKED		

ORIGINAL SURVEY		BY	DATE
NOTE BOOK NO.	SURVEYED		
	PLOTTED		
	TEMPLATE		
	AREAS		
	AREAS CHECKED		

FILE NAME = V:\Bridge\2990 - Schuyler\2990xshts.dgn	USER NAME = cthomas	DESIGNED -	REVISED -
		DRAWN -	REVISED -
	PLOT SCALE = 6.0000 ' / in.	CHECKED -	REVISED -
XS.SHEET	PLOT DATE = 7/24/2012	DATE -	REVISED -

SCHUYLER COUNTY
COUNTY HIGHWAY 2
OVER SUGAR CREEK

CROSS SECTIONS

SCALE: 1"=5' | SHEET 10 OF 12 SHEETS | STA. 23+50.00 TO STA. 24+16.00

F.A.S. RTE.	SECTION	COUNTY	TOTAL SHEETS	SHEET NO.
455	07-00073-00-BR	SCHUYLER	35	33
		CONTRACT NO. 93584		

FED. ROAD DIST. NO. 7 | ILLINOIS | FED. AID PROJECT BRS-0455(107)

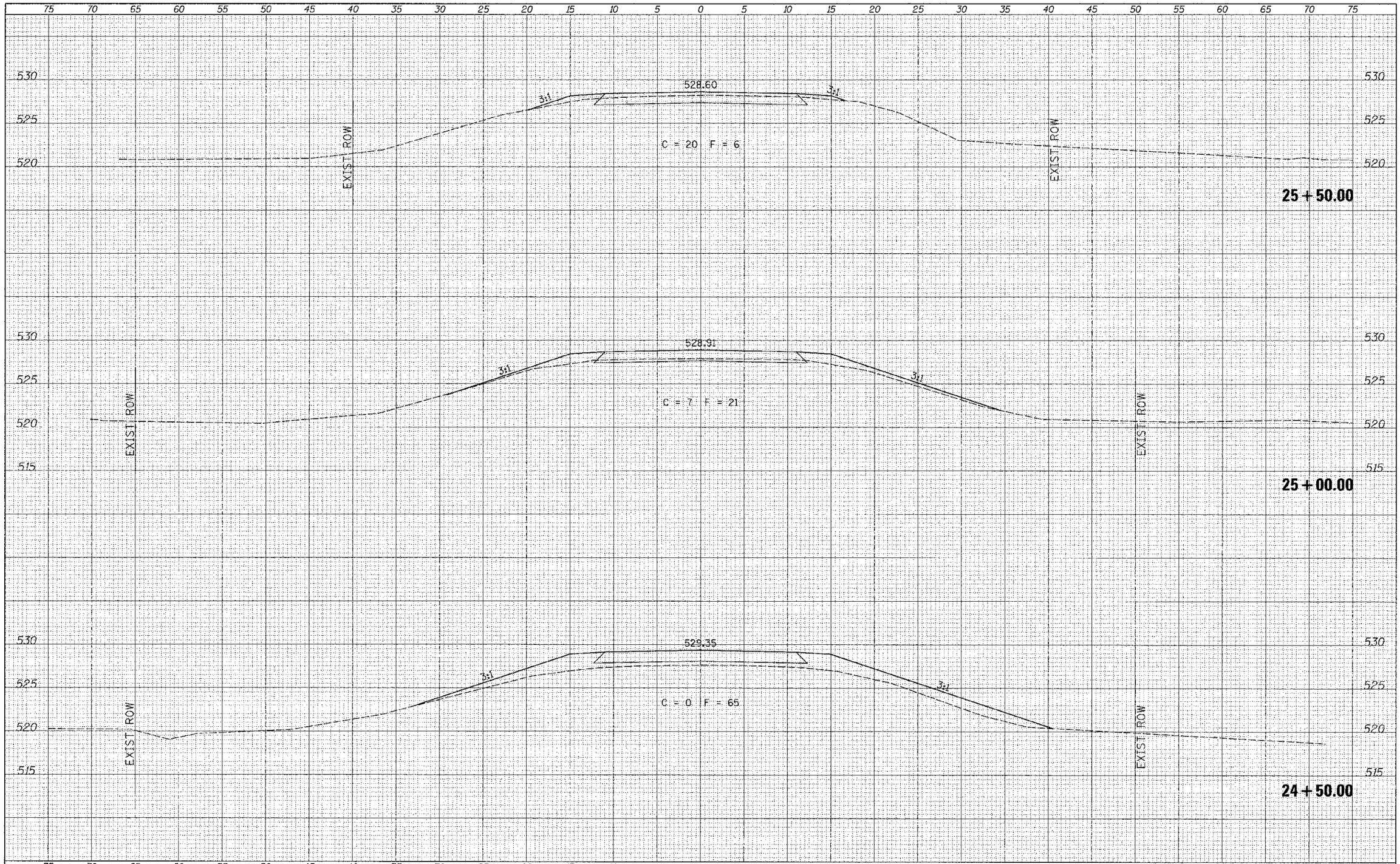

FINAL SURVEY	SURVEYED	BY	DATE
NOTE BOOK	PLOTTED		
	TEMPLATE		
	AREAS		
NO.	AREAS CHECKED		

ORIGINAL SURVEY	SURVEYED	BY	DATE
NOTE BOOK	PLOTTED		
	TEMPLATE		
	AREAS		
NO.	AREAS CHECKED		

FILE NAME =	USER NAME = athomas	DESIGNED -	REVISED -
V:\Bridge\2992 Schuyler\2992xsht.dgn		DRAWN -	REVISED -
	PLOT SCALE = 5.0000 ' / in.	CHECKED -	REVISED
XS_SHEET	PLOT DATE = 7/24/2012	DATE -	REVISED -

SCHUYLER COUNTY
COUNTY HIGHWAY 2
OVER SUGAR CREEK

CROSS SECTIONS

SCALE: 1"=5' | SHEET 11 OF 12 SHEETS | STA. 24+50.00 TO STA. 25+50.00

F.A.S. RTE.	SECTION	COUNTY	TOTAL SHEETS	SHEET NO.
455	07-00073-00-BR	SCHUYLER	35	34

CONTRACT NO. 93584

FED. ROAD DIST. NO. 7 | ILLINOIS | FED. AID PROJECT BRS-0435(107)

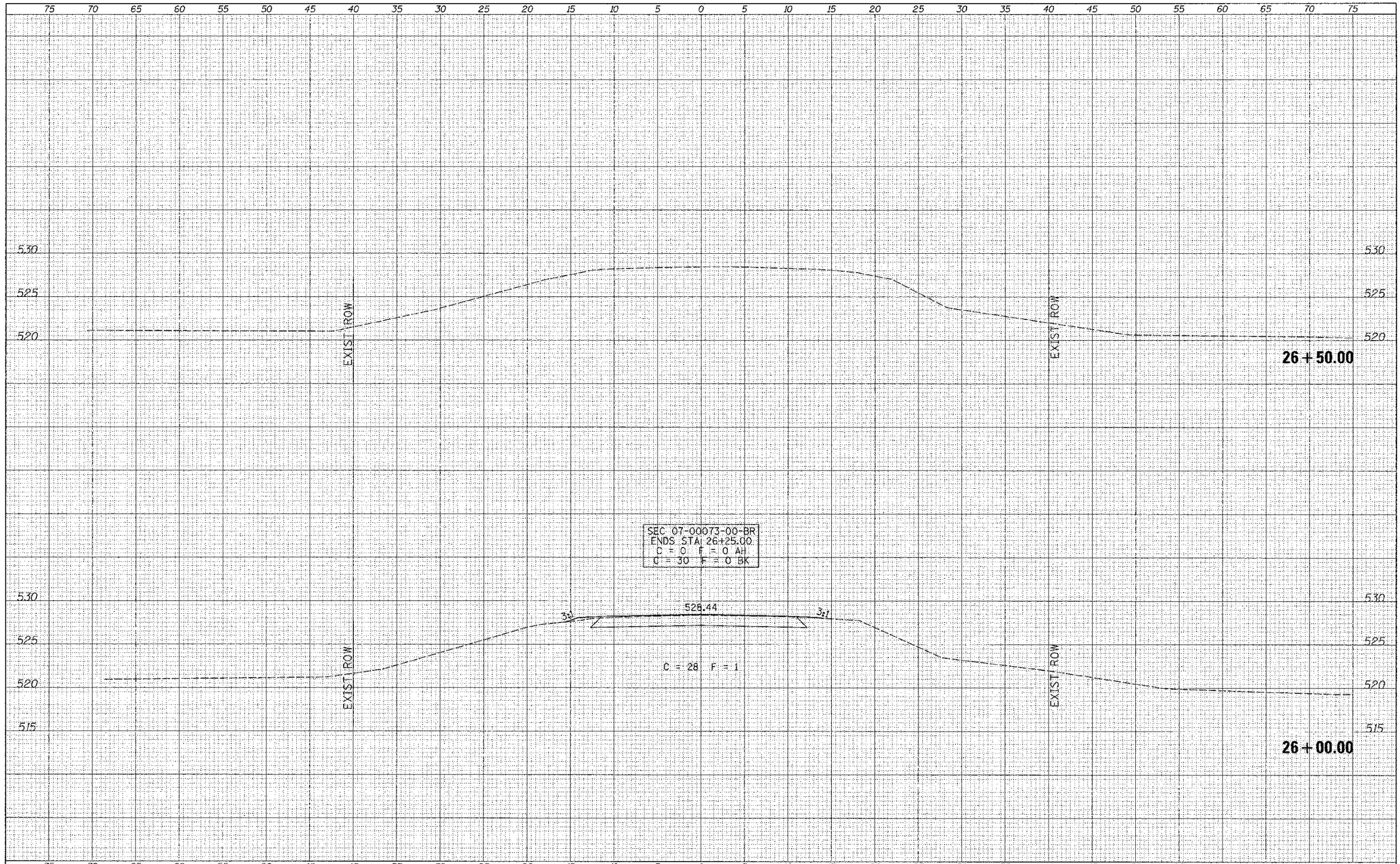

FINAL SURVEY	BY	DATE
NOTE BOOK	SURVEYED	
	PLOTTED	
	TEMPLATE	
	AREAS	
	AREAS CHECKED	

ORIGINAL SURVEY	BY	DATE
NOTE BOOK	SURVEYED	
	PLOTTED	
	TEMPLATE	
	AREAS	
	AREAS CHECKED	

FILE NAME = W:\Bridge\2990 - Schuyler\2990xsht0.dgn	USER NAME = nthomas	DESIGNED -	REVISED -
		DRAWN -	REVISED -
	PLOT SCALE = 5.0000 ' / in.	CHECKED -	REVISED -
XS_SHEET	PLOT DATE = 7/24/2012	DATE -	REVISED -

SCHUYLER COUNTY
COUNTY HIGHWAY 2
OVER SUGAR CREEK

CROSS SECTIONS

SCALE: 1"=5' | SHEET 12 OF 12 SHEETS | STA. 26+00.00 TO STA. 26+50.00

F.A.S. RTE.	SECTION	COUNTY	TOTAL SHEETS	SHEET NO.
455	07-00073-00-BR	SCHUYLER	35	35

CONTRACT NO. 93584

FED. ROAD DIST. NO. 7 | ILLINOIS | FED. AID PROJECT BRS-0455(107)