STATE OF ILLINOIS
DEPARTMENT OF TRANSPORTATION

ROUTE NO.	SECTION	COUNTY	TOTAL SHEETS	SHEET NO.
F. A. P. 846	4-RB	WILL	87	34
FED. ROAD DIST. NO. 7	ILLINOIS	FED. AID PROJECT-		

SHEET NO. S6
SHEETS S20

CONTRACT NO. 62269

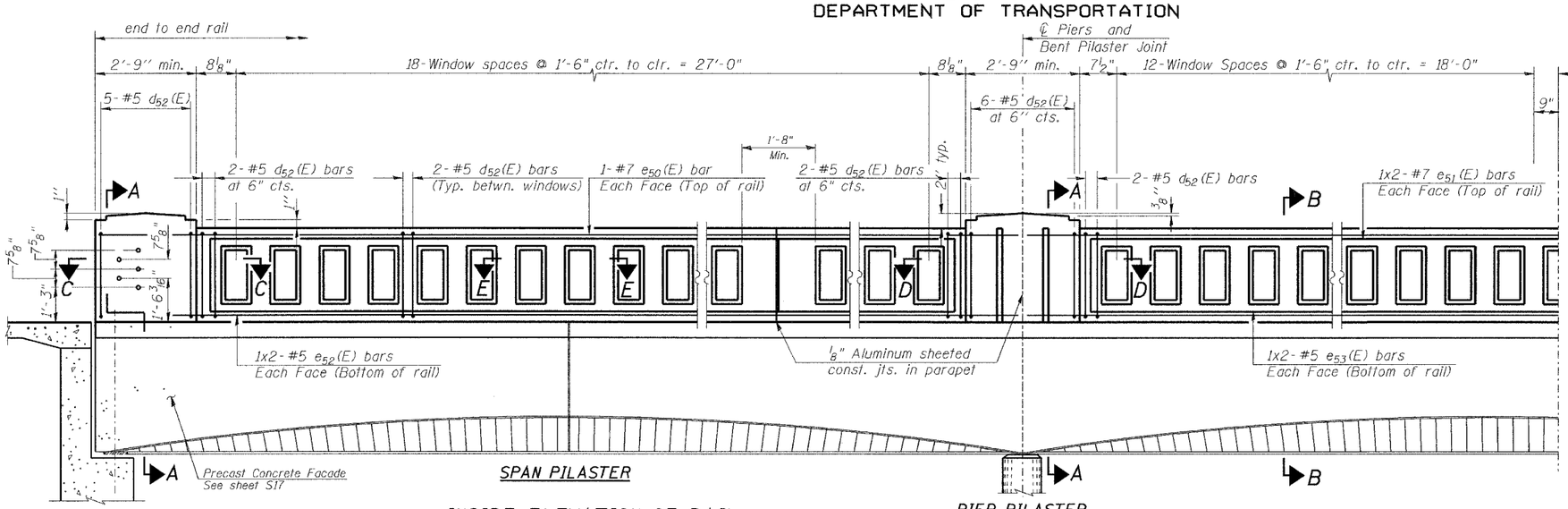

INSIDE ELEVATION OF RAIL

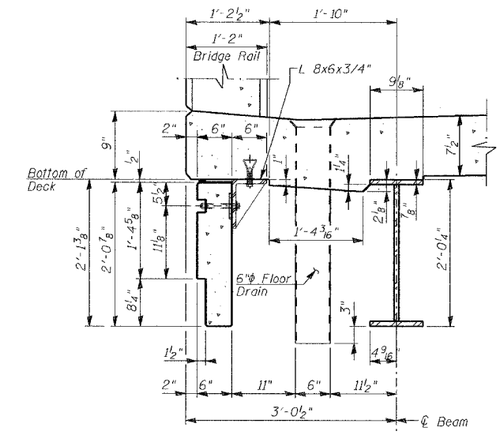

DETAIL 1 (1 or 6)

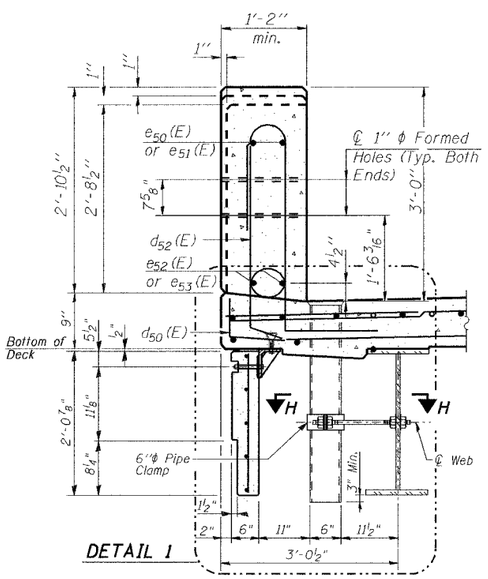

DETAIL 1

SECTION A-A

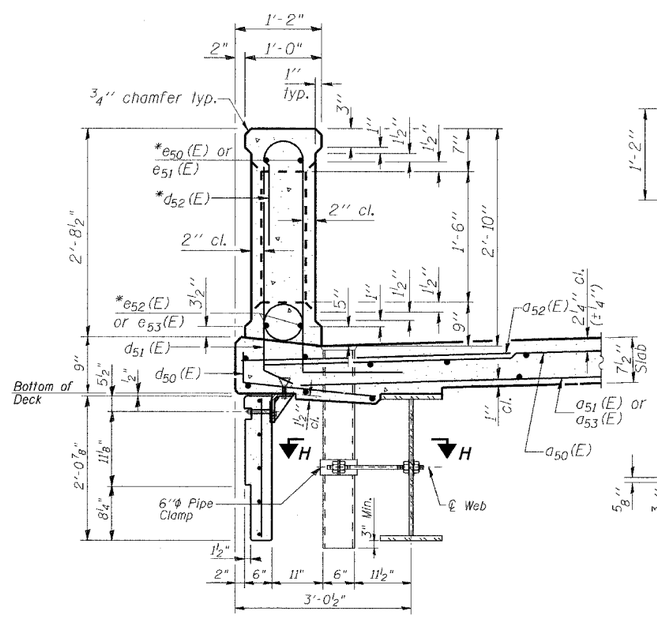

SECTION B-B

* Bars e50(E) thru e53(E) & d52(E) are included in the cost of Concrete Bridge Railing.

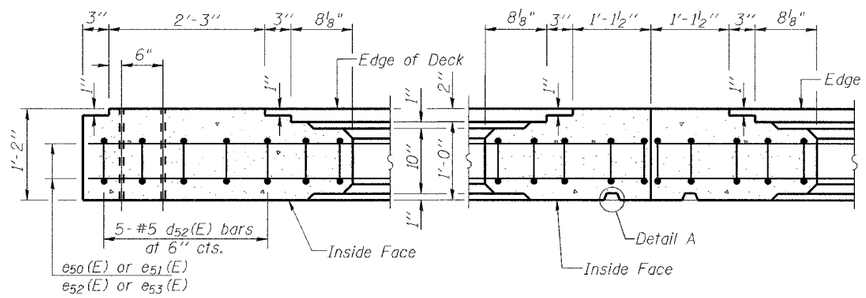

SECTION C-C

SECTION D-D

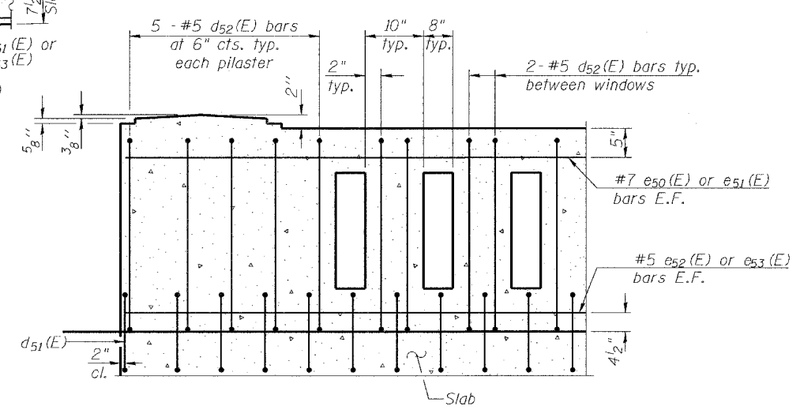

TYPICAL REINFORCEMENT PLACEMENT
(Inside Face)

BAR LIST

Bar	No.	Size	Length	Shape
d52(E)	312	#5	7'-4"	
e50(E)	8	#7	32'-2"	
e51(E)	8	#7	21'-11"	
e52(E)	16	#5	16'-11"	
e53(E)	8	#5	21'-5"	

Note:
The above list of bars are for Information only. All reinforcement bars shown In this Bill of Material are Included In the cost for "Concrete Bridge Railing".

Note:
Work this sheet together with sheet S5, S7 and S17.

DESIGNED	NDS/GMK
CHECKED	MTP/SMK/GBC
DRAWN	NDS /DCB
CHECKED	SMK/GBC

Notes:
All concrete for railing wall shall be Class BS according to Article 1020.04 of the Standard Specifications. Surface of railing shall receive a rubbed finish according to Article 503.15(b) of the Standard Specifications.
All parts of the railing including concrete and reinforcing will be paid for at the contract unit price per foot for Concrete Bridge Railing.
Holes and recesses must be formed or cored. Drilling is not permitted.
Aluminum sheets shall be according to ASTM B209 alloy 3003-H14.

ILLINOIS DEPARTMENT OF TRANSPORTATION

CONCRETE BRIDGE RAILING
(Sheet 1 OF 2)
FAP 846
NB IL. ROUTE 53 OVER PRAIRIE CREEK
STATION 1305+00 SECTION 4-RB
WILL COUNTY
STRUCTURE NO. 099-0090

SCALE: NONE
DATE: AUGUST 2007

DELTA ENGINEERING INC.
CONSULTING ENGINEERS, CHICAGO ILLINOIS.