CONTRACT NO. 64931

F.A.P. RTE.	SECTION	COUNTY	TOTAL SHEETS	SHEET NO.
*595	5HBR	ROCK ISLAND	139	105
STA.		TO STA.		
FED. ROAD DIST. NO.	ILLINOIS	FED. AID PROJECT		

*(IL 5/IL 92)

TYPICAL PAVEMENT MARKINGS

ARROW LAYOUT

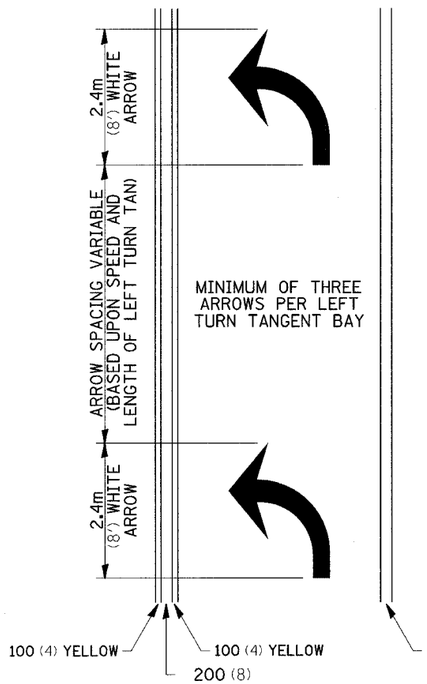

◀ ONE-WAY AMBER MARKER

◁ ONE-WAY CRYSTAL MARKER

◆ TWO-WAY AMBER MARKER

ALL DIMENSIONS ARE IN MILLIMETERS (INCHES) UNLESS OTHERWISE NOTED.

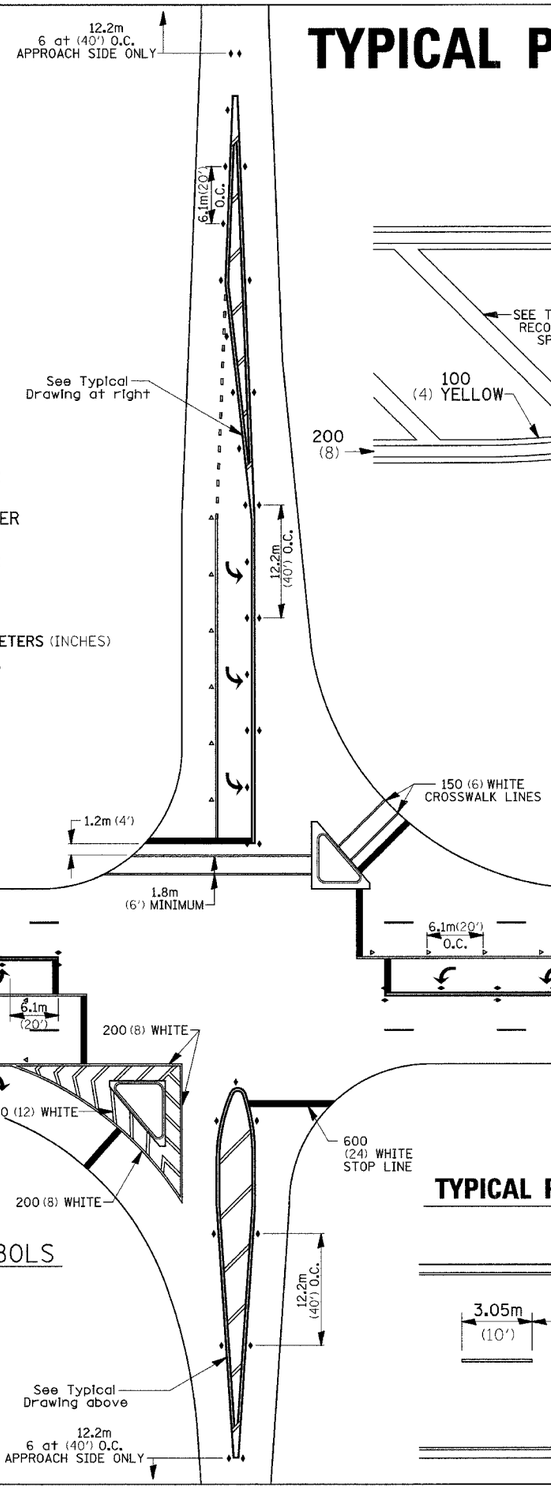

TYPICAL PAVEMENT MARKING FOR FLUSH MEDIAN

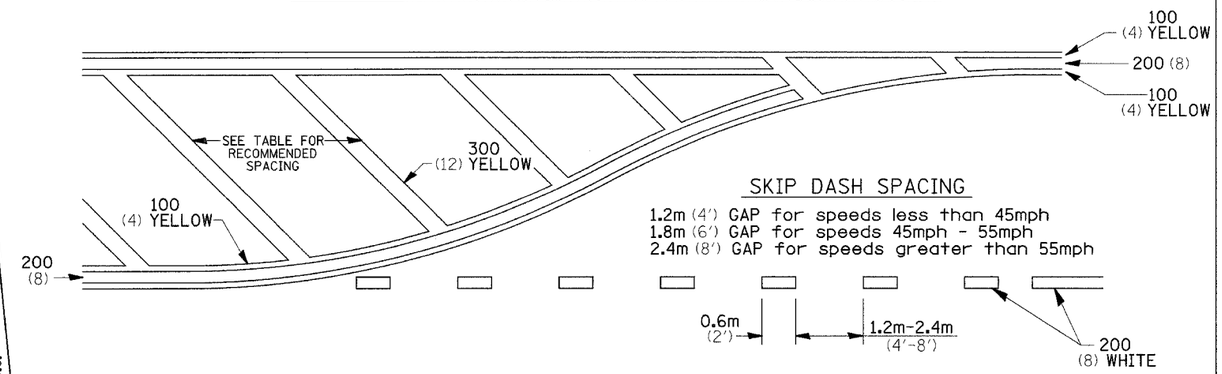

SKIP DASH SPACING

1.2m (4') GAP for speeds less than 45mph
1.8m (6') GAP for speeds 45mph - 55mph
2.4m (8') GAP for speeds greater than 55mph

RECOMMENDED SPACING BETWEEN DIAGONALS (IN FEET)

Speed Limit Range	Continuous Median Area	Intersection Channelization	Objects (Islands)
less than 50Km/H (30MPH)	15.3m (50')	4.53m (15')	3.05m (10')
50-60Km/H (30-40MPH)	22.9m (75')	6.1m (20')	4.53m (15')
70Km/H (45MPH) & over	22.9m (75')	9.05m (30')	6.1m (20')

NOTE: If the spacing recommended in the Table does not permit at least five diagonal lines in the area being marked, the spacing from the next lowest speed range should be used. The recommended spacing is measured parallel to the pavement center line.

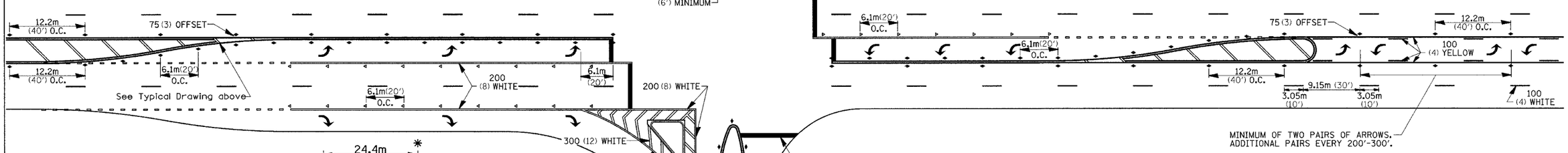

TYPICAL PAVEMENT MARKING FOR TWO LANE SECTION – NO PASSING ZONES

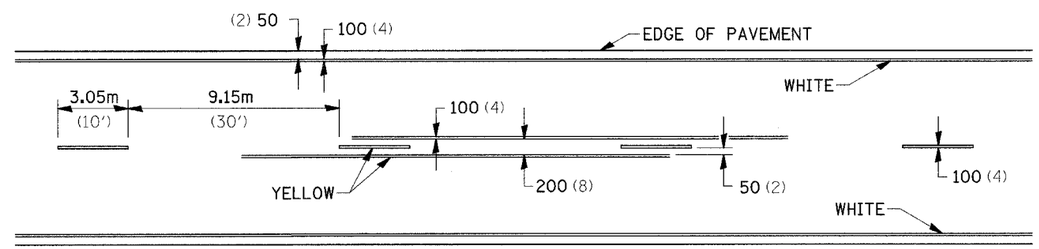

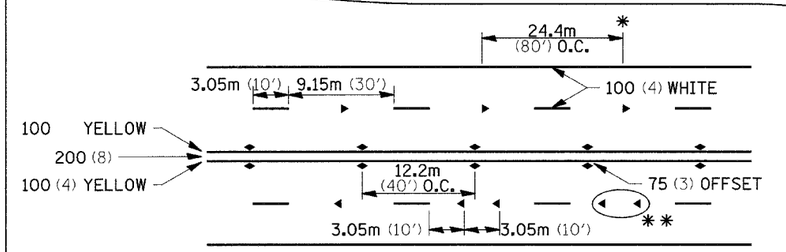

SYMBOLS

* REDUCE TO 12.2m (40') O.C. ON CURVES WHERE ADVISORY SPEEDS ARE 15Km/H (10MPH) LOWER THAN POSTED SPEEDS.

** USE DOUBLE MARKERS WHEN ADT ≥ 25,000

MULTI-LANE / UNDIVIDED

PLOT DATE = Wed Aug 22 13:42:51 2007
FILE NAME = c:\pw_work\pw_12\262020\d802030pl.dgn
PLOT SCALE = 50.0000 ' / IN.
REFERENCE = REF

REVISED 7-20-06