ROUTE NO.	SECTION	COUNTY	TOTAL SHEETS	SHEET NO.
F.A.P. 310 U.S. 67	(40B1)BR, (41-A)BR-1	McDonough	66	25
FED. ROAD DIST. NO. 4		FED. AID PROJECT-		

SHEET NO. 8
14 SHEETS

Contract #68677

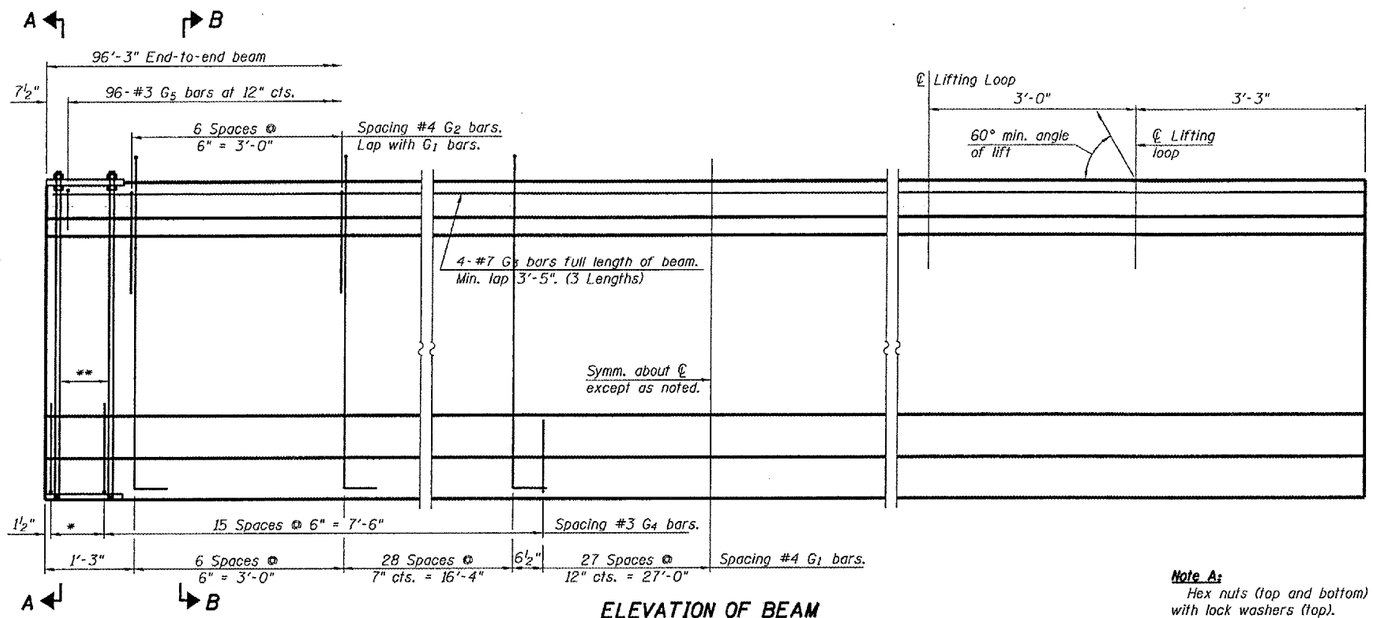

ELEVATION OF BEAM
(Showing reinforcement & dimensions)

* 3 spaces at 3" = 9".
** 4-¾" ϕ threaded dowel rods at 3" cts., each face.

Note A:
Hex nuts (top and bottom) with lock washers (top). Only tighten sufficiently to compress lock washers.

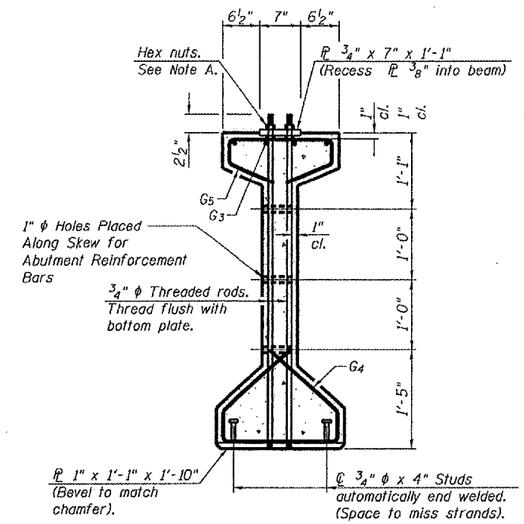

SECTION A-A

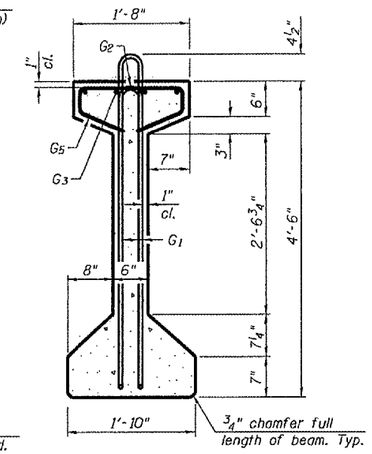

SECTION B-B

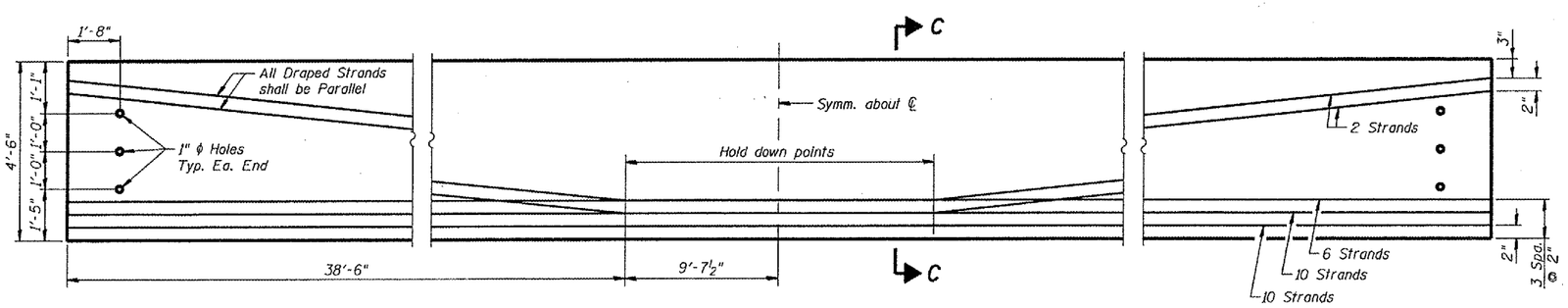

ELEVATION OF BEAM
(Showing prestressing steel)

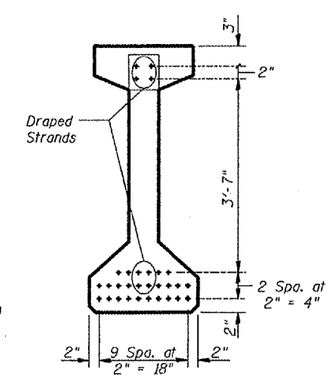

SECTION C-C

BAR LIST
ONE BEAM ONLY

Bar	No.	Size	Length	Shape
G_1	125	#4	10'-5"	
G_2	14	#4	5'-4"	
G_3	12	#7	34'-4"	
G_4	38	#3	4'-11"	
G_5	96	#3	3'-5"	

Notes:
See sheet 9 of 14 for additional details and Bill of Material.
Required release strength, f'ci, shall be 5000 psi.

PRESTRESSED BEAM DETAILS
F.A.P. 310, SECTION (41A)BR-1
U.S. ROUTE 67 OVER GRINDSTONE CREEK
McDONOUGH COUNTY
STA. 454+20 (S.N. 055-0049)

WHA # 1050D03