ROUTE NO.	SECTION	COUNTY	TOTAL SHEETS	SHEET NO.
S.B.I. F.A.P. 310	(41A)BR-1	McDONOUGH	66	30
FED. ROAD DIST. NO. 7	ILLINOIS	FED. AID PROJECT-		

SHEET NO. 13
14 SHEETS

CONTRACT # 68677

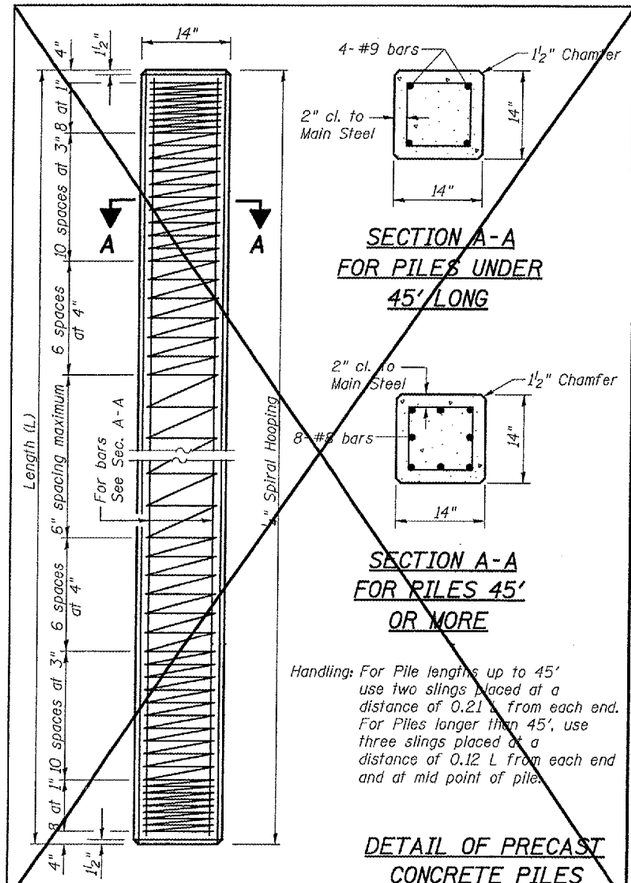

SECTION A-A
FOR PILES UNDER 45' LONG

SECTION A-A
FOR PILES 45' OR MORE

Handling: For Pile lengths up to 45' use two slings placed at a distance of 0.21 L from each end. For Piles longer than 45', use three slings placed at a distance of 0.12 L from each end and at mid point of pile.

DETAIL OF PRECAST CONCRETE PILES

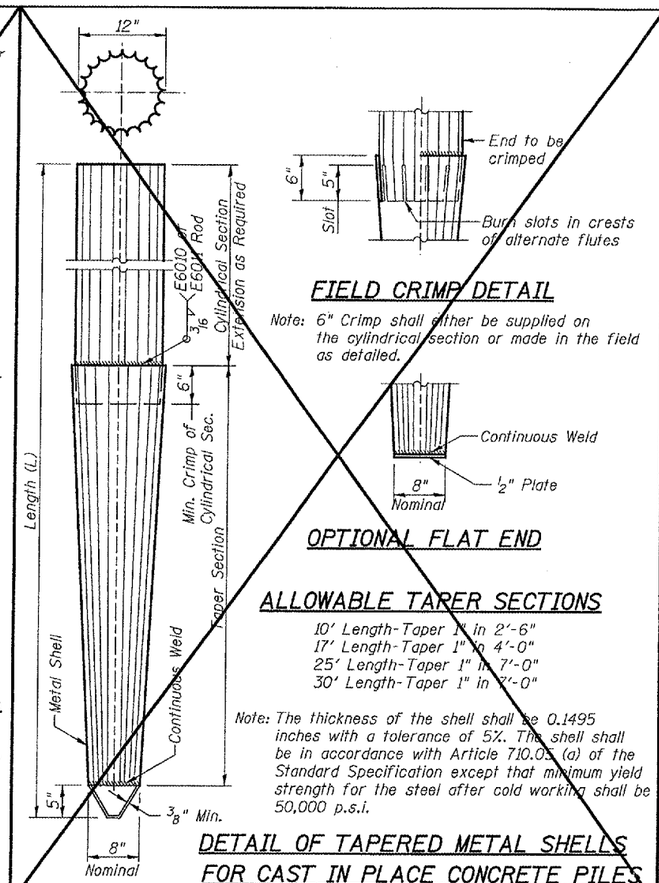

FIELD CRIMP DETAIL

Note: 6" Crimp shall either be supplied on the cylindrical section or made in the field as detailed.

OPTIONAL FLAT END

ALLOWABLE TAPER SECTIONS

10' Length-Taper 1" in 2'-6"
17' Length-Taper 1" in 4'-0"
25' Length-Taper 1" in 7'-0"
30' Length-Taper 1" in 7'-0"

Note: The thickness of the shell shall be 0.1495 inches with a tolerance of 5%. The shell shall be in accordance with Article 710.05 (a) of the Standard Specification except that minimum yield strength for the steel after cold working shall be 50,000 p.s.i.

DETAIL OF TAPERED METAL SHELLS FOR CAST IN PLACE CONCRETE PILES

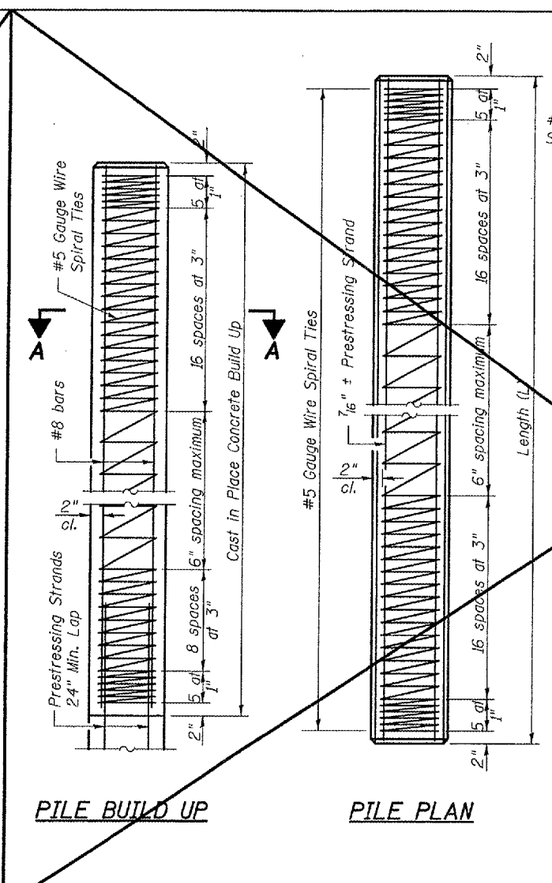

PILE BUILD UP

PILE PLAN

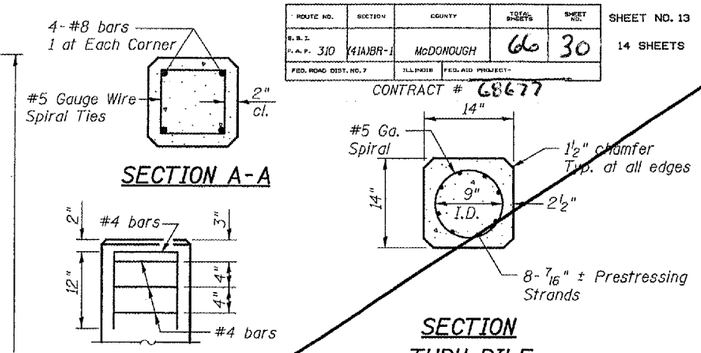

SECTION A-A

ELEVATION
(End Reinforcement)

SECTION THRU PILE

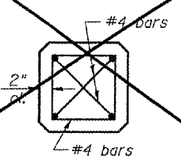

PLAN
(End Reinforcement)

DESIGN STRESSES

f'_c = 5,000 p.s.i.
f'_{ci} = 4,000 p.s.i.
f'_s = 270,000 p.s.i. (31,000 lbs.-7/16" ± or 41,300 lbs.-½" ±)
f'_{si} = 189,000 p.s.i. (21,700 lbs.-7/16" ± or 28,900 lbs.-½" ±)

NOTES

Prestressing steel shall be non-galvanized extra high strength stress-relieved 7-wire strand. The nominal diameter shall be 7/16" and the minimum nominal cross-sectional area shall be 0.115 sq. in. or the equivalent 6-½" ± strands with a cross-sectional area of 0.153 sq. in. may be used.

For Pile lengths up to 65', use two slings placed at a distance of 0.21 L* from each end. For Piles longer that 65', use three slings placed at a distance of 0.12 L* from each end and at midpoint of pile. *L= Overall length of pile to be handled.

PRECAST PRESTRESSED CONCRETE PILE

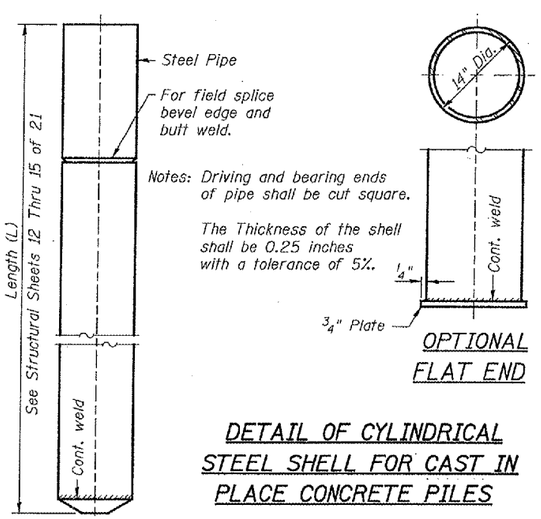

Notes: Driving and bearing ends of pipe shall be cut square.

The Thickness of the shell shall be 0.25 inches with a tolerance of 5%.

OPTIONAL FLAT END

DETAIL OF CYLINDRICAL STEEL SHELL FOR CAST IN PLACE CONCRETE PILES

The cost of Reinforcement is incidental to the cost of furnishing piles.

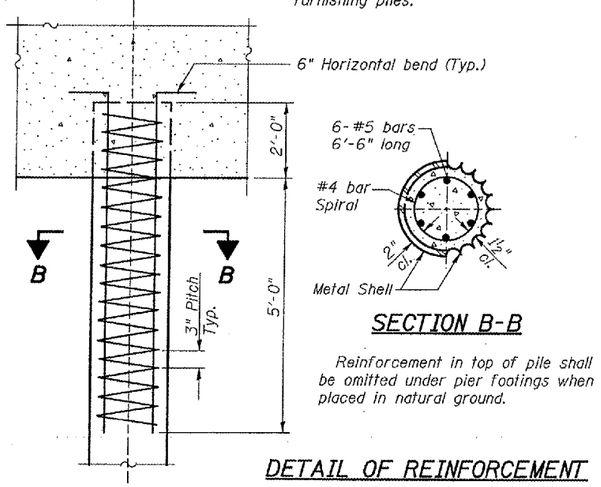

SECTION B-B

Reinforcement in top of pile shall be omitted under pier footings when placed in natural ground.

DETAIL OF REINFORCEMENT FOR METAL SHELLS

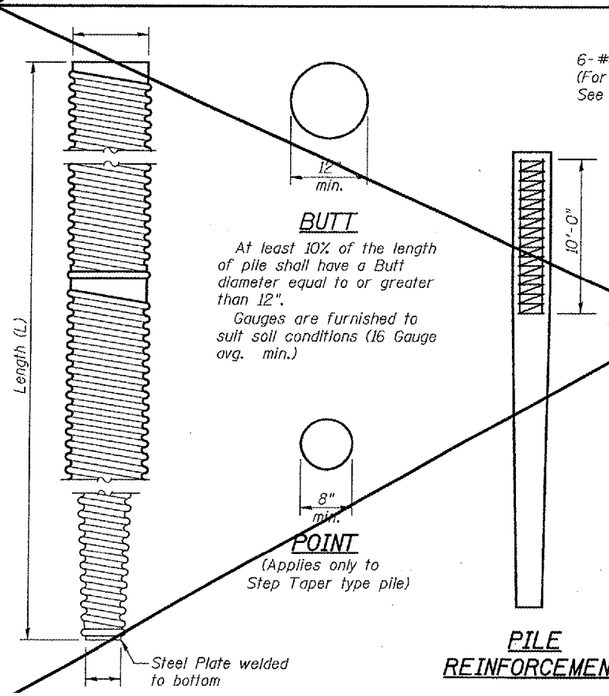

BUTT

At least 10% of the length of pile shall have a Butt diameter equal to or greater than 12".

Gauges are furnished to suit soil conditions (16 Gauge avg. min.)

POINT
(Applies only to Step Taper type pile)

PILE REINFORCEMENT

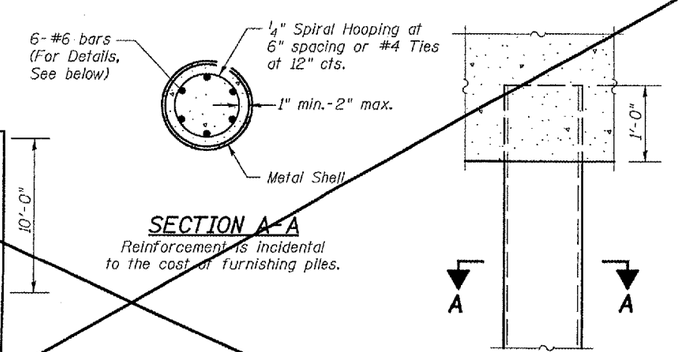

SECTION A-A
Reinforcement is incidental to the cost of furnishing piles.

DETAIL OF MANDREL DRIVEN STRAIGHT OR STEP-TAPER PILES FOR CAST IN PLACE CONCRETE PILES

PILING DETAILS
F.A.P. 310, SECTION (41A)BR-1
U.S. ROUTE 67 OVER GRINDSTONE CREEK
McDONOUGH COUNTY
STA. 454+20 (S.N. 055-0049)