F.A. RTE.	SECTION	COUNTY	TOTAL SHEETS	SHEET NO.
	*	WILL	64	24
STA.	TO STA.			
FED. ROAD DIST. NO.	ILLINOIS	FED. AID PROJECT		

* 02-11106-01-BR CONTRACT NO. 83949

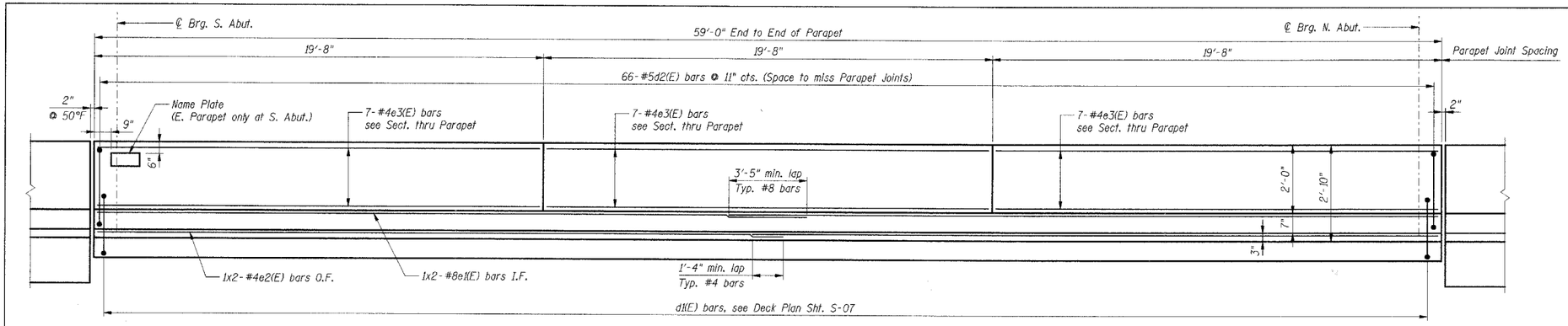

INSIDE ELEVATION OF PARAPET

(West Parapet shown, East Parapet similar, opposite hand)

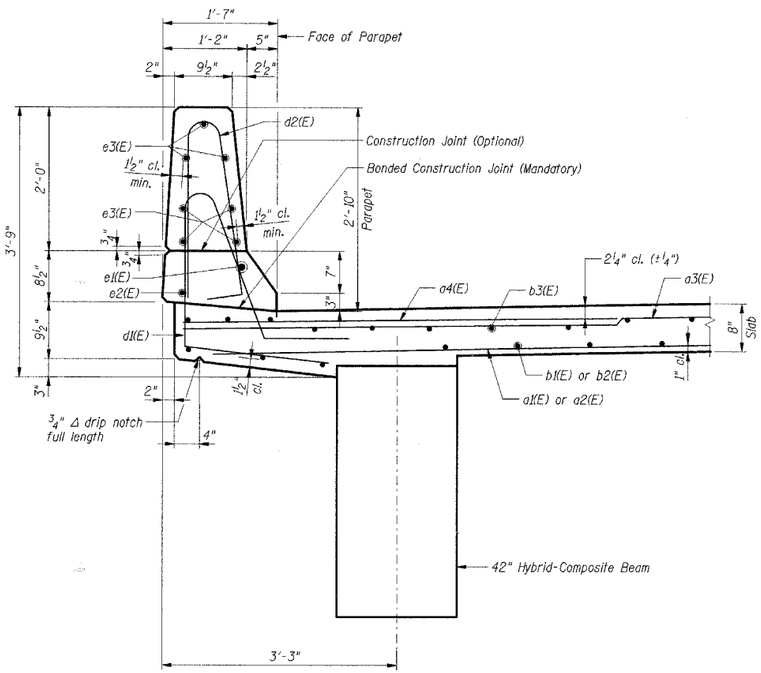

SECTION THRU PARAPET

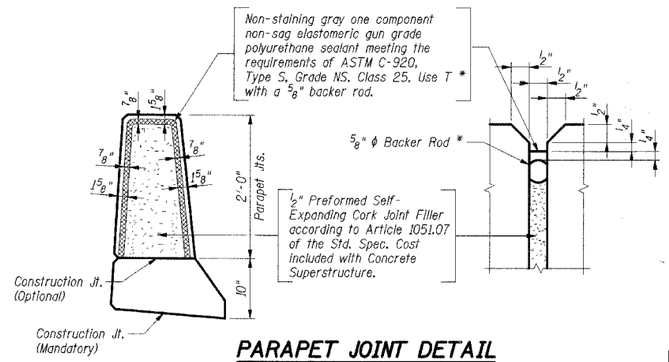

PARAPET JOINT DETAIL

* Cost included with Concrete Superstructure.

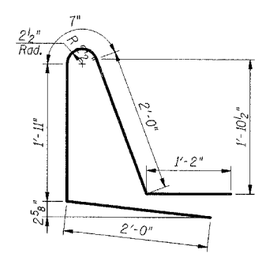

Bar d1(E)

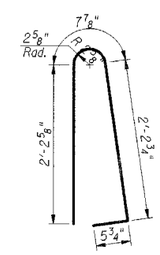

Bar d2(E)

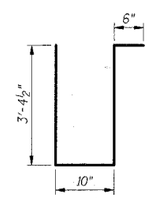

Bar s1(E)

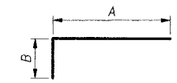

Bar	A	B
a8(E)	5'-0"	1'-0"
m3(E)	3'-0"	1'-0"
m6(E)	2'-10"	8"
x1(E)	4'-0"	1'-6"
x2(E)	4'-0"	1'-0"

Bars a8(E), m3(E), m6(E), x1(E) & x2(E)

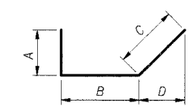

Bar	A	B	C	D
x3(E)	1'-1"	2'-4½"	1'-6½"	1'-1"
x4(E)	1'-2½"	2'-4½"	1'-8"	1'-2½"
x5(E)	1'-4"	2'-4½"	1'-10½"	1'-4"

Bars x3(E), x4(E) & x5(E)

BAR LIST

Bar	No.	Size	Length	Shape
a1(E)	67	#5	18'-3"	
a2(E)	67	#5	25'-6"	
a3(E)	180	#5	22'-4"	
a4(E)	90	#6	6'-6"	
a5(E)	12	#7	23'-0"	
a6(E)	2	#6	20'-0"	
a7(E)	16	#6	10'-0"	
a8(E)	8	#6	6'-0"	
b1(E)	41	#5	23'-9"	
b2(E)	41	#5	36'-0"	
b3(E)	92	#5	30'-2"	
d1(E)	130	#5	7'-8"	
d2(E)	130	#5	5'-7"	
e1(E)	4	#8	31'-2"	
e2(E)	4	#4	30'-2"	
e3(E)	42	#4	19'-4"	
m1(E)	36	#6	20'-6"	
m2(E)	8	#6	5'-6"	
m3(E)	8	#6	4'-0"	
m4(E)	8	#4	20'-3"	
m5(E)	8	#4	5'-6"	
m6(E)	8	#4	3'-6"	
s1(E)	30	#4	8'-1"	
x1(E)	67	#6	5'-6"	
x2(E)	67	#6	5'-0"	
x3(E)	22	#6	5'-0"	
x4(E)	22	#6	5'-3"	
x5(E)	22	#6	5'-7"	

BILL OF MATERIAL

Item	Unit	Total
Concrete Superstructure	Cu yd	103
Reinforcement Bars, Epoxy Coated	Lbs	20,390
Bridge Deck Grooving	Sq Yd	262
Protective Coat	Sq Yd	312

Notes:

1. Reinforcement bars designated (E) shall be epoxy coated.
2. Bars indicated thus 3x2-#5 etc. indicates 3 lines of bars with 2 lengths per line.
3. For Name Plate details see sheet S-02.
4. I.F. denotes Inside Face
5. O.F. denotes Outside Face
6. E.F. denotes Each Face.

SHT. S-08 OF 28

REVISIONS	
NAME	DATE

LOCKPORT TOWNSHIP HIGHWAY DEPARTMENT
TR216A HIGH ROAD OVER LONG RUN CREEK
SECTION 02-11106-01-BR

PARAPET AND DECK DETAILS

SCALE:
DATE: 9-07-2007
DRAWN BY: KK, HBJ
CHECKED BY: JRH

TENG
TENG & ASSOCIATES, INC.
ENGINEERS/ARCHITECTS/PLANNERS
205 N. MICHIGAN AVE. CHICAGO, IL 60601
TELEPHONE: 312/616-0000

BONDHLJ0

..\ALTOOPRE1.DGN, ..\DNPOOR4F.DGN, ..\TTBOOR68.DGN, ..\PAROOR4.DGN, ..\PAROOR4J.DGN, ..\BOMOORML.DGN
9-07-2007, 9:05:34 S:\DOCUMENT\02259902\STRUCT\DGN\PAROOR4J.DGN