CONTRACT NO. 83949

F.A. RTE.	SECTION	COUNTY	TOTAL SHEETS	SHEET NO.
			64	46
STA.		TO STA.		
FED. ROAD DIST. NO.	ILLINOIS	FED. AID PROJECT		

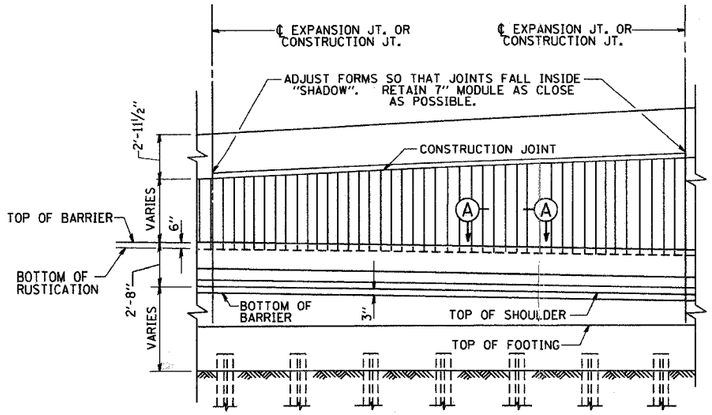

ELEVATION-TYPICAL ARCHITECTURAL FINISH

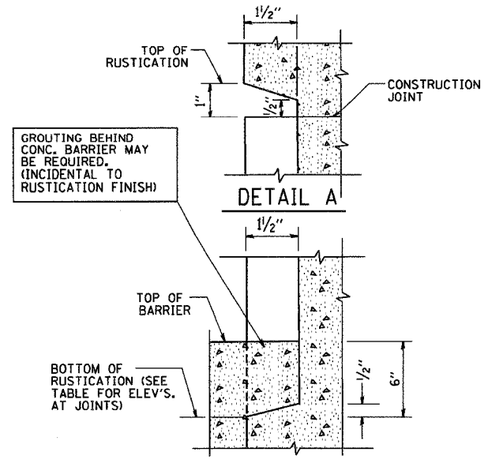

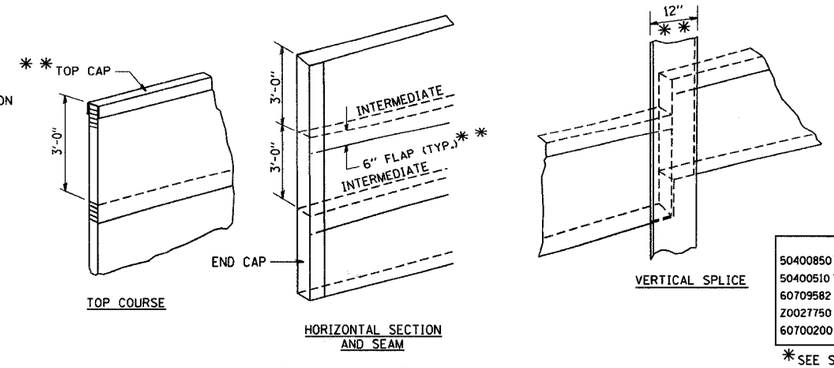

GEOCOMPOSITE WALL DRAIN DETAILS

** SEE RECURRING SPECIAL PROVISION #43 FOR GEOCOMPOSITE WALL DRAIN

PREFERRED PAY ITEMS

50400850 *	CLASS X CONCRETE (RETAINING WALL)	(C.Y.)
50400510 *	RUSTICATION FINISH	(S.F.)
60709582 *	PIPE UNDERDRAINS FOR STRUCTURES 6"	(L.F.)
Z0027750 *	GEOCOMPOSITE WALL DRAIN	(S.Y.)
60700200	PIPE DRAINS 6"	(L.F.)

* SEE SPECIAL PROVISIONS

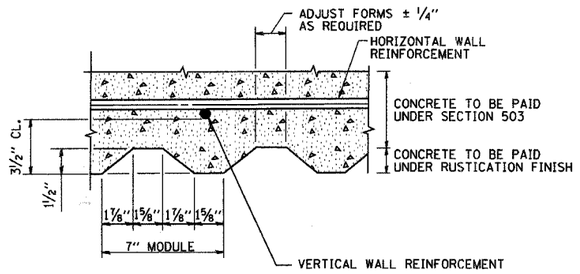

SECTION A-A

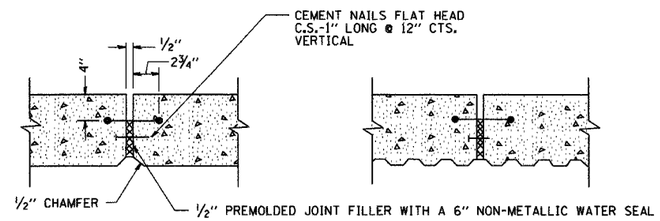

EXPANSION JOINT DETAIL

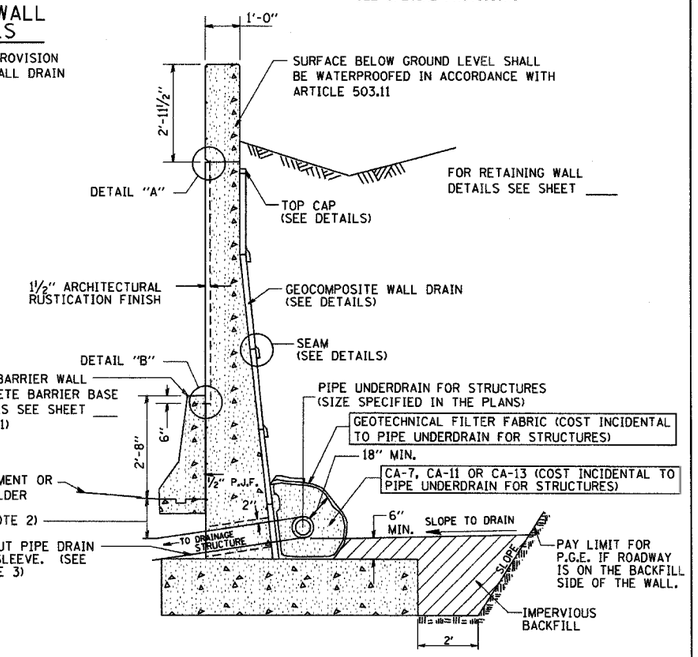

SLOPE: 1 TO 1 WITHOUT SHEETING
VERTICAL WITH SHEETING

TYPICAL SECTION THRU RETAINING WALL

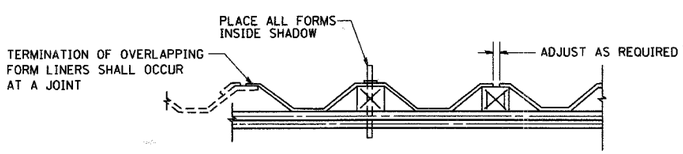

SUGGESTED FORMWORK DETAIL

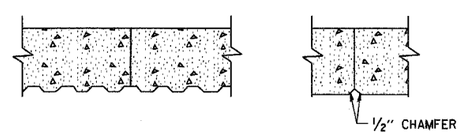

CONSTRUCTION JOINT DETAIL

WALL #	
STATION	ELEVATION

WALL #	
STATION	ELEVATION

WALL #	
STATION	ELEVATION

WALL #	
STATION	ELEVATION

WALL #	
STATION	ELEVATION

WALL #	
STATION	ELEVATION

WALL #	
STATION	ELEVATION

WALL #	
STATION	ELEVATION

NOTE 1.

CONCRETE BARRIER CONSTRUCTION:

WHEN THE CONCRETE BARRIER WALL IS TO BE CONSTRUCTED MONOLITHIC WITH THE RETAINING WALL THE DETAILS SHOWN IN THE RETAINING WALL SECTION SHALL GOVERN.

NOTE 2.

PIPE DRAIN SLOPE:

PRIOR TO THE PLACEMENT OF THE PIPE UNDERDRAIN SLEEVE THE ENGINEER SHALL DETERMINE THE SLOPE REQUIRED FOR THE PIPE UNDERDRAIN TO ENTER BELOW THE DRAINAGE STRUCTURE LID AT OR BELOW THE MINIMUM DISTANCE SHOWN ON THE DETAILS FOR THE STRUCTURE.

NOTE 3.

PIPE DRAIN

THE PIPE DRAIN SHALL TERMINATE AT A DRAINAGE STRUCTURE.

THE COST OF THE SLEEVE AND GROUT SHALL BE INCIDENTAL TO PIPE DRAINS.

REVISIONS	
NAME	DATE
FORD	11/30/88
FORD	05/15/89
DE YONG	09/07/89
DE YONG	07/11/90
DE YONG	08/18/90
DE YONG	07/09/91
R. WEIDEMAN	02/20/04

ILLINOIS DEPARTMENT OF TRANSPORTATION

RUSTICATION FINISH AND GEOCOMPOSITE DRAIN FOR RETAINING WALLS

SCALE: VERT. NONE HORIZ.

DRAWN BY CADD

CHECKED BY

BD500-02 (BD-28)

PLOT DATE = 3/5/2007
FILE NAME = k:\dists\sd\bd28.dgn
PLOT SCALE = 50.0000 ' / IN.
USER NAME = bauerdl