CONTRACT NO. 94967

F.A.P. RTE.	SECTION	COUNTY	TOTAL SHEETS	SHEET NO.
327	(51-23)B-3	LAWRENCE	56	16
STA.		TO STA.		
FED. ROAD DIST. NO.	ILLINOIS	FED. AID PROJECT		

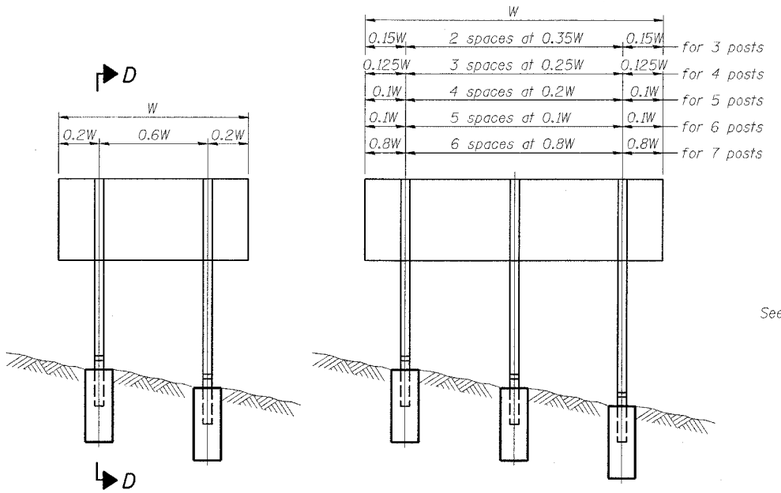

ELEVATION

LOCATION SKETCH

FUSE PLATE DETAIL
(Install with notches down.)

FUSE PLATE DATA		
N = Bolt Diameter	G	H
1/2"	2"	1 1/8"
5/8"	2 1/4"	1 1/4"
3/4"	2 1/2"	1 3/8"
7/8"	2 3/4"	1 1/2"
1"	3"	1 5/8"
1 1/8"	3 1/4"	1 3/4"
1 1/4"	3 1/2"	1 7/8"

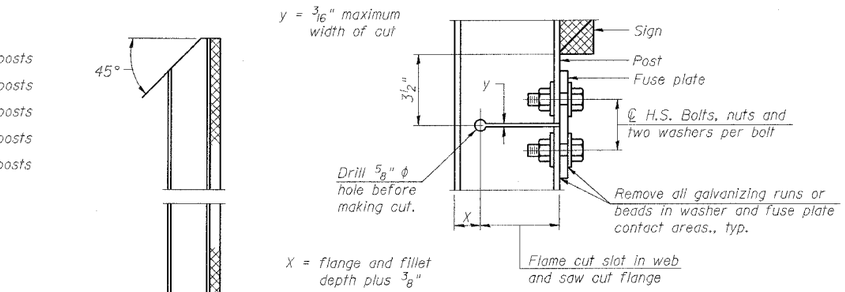

DETAIL H

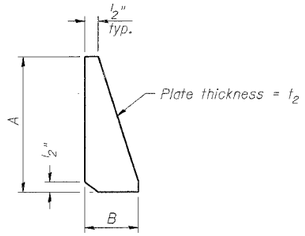

STIFFENER PLATE DETAIL
(See table for dimensions.)

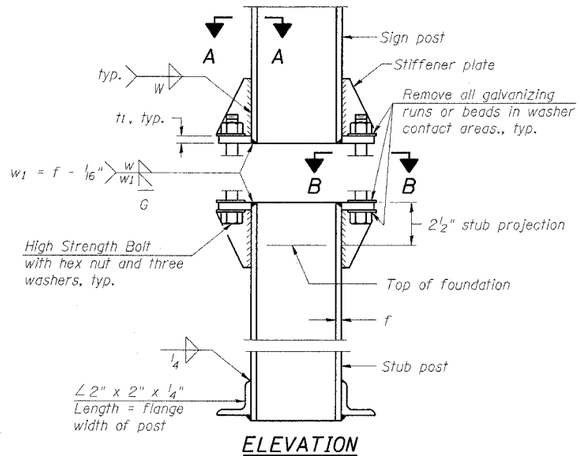

ELEVATION
SIGN POST & STUB POST

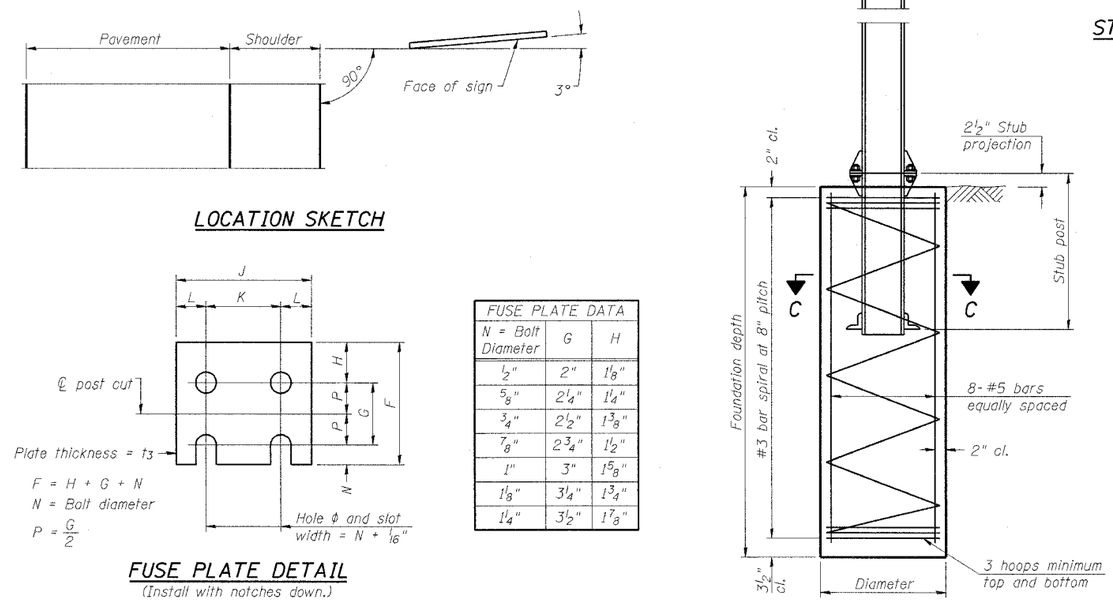

SECTION D-D

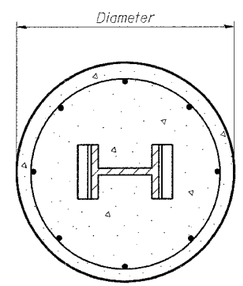

SECTION C-C

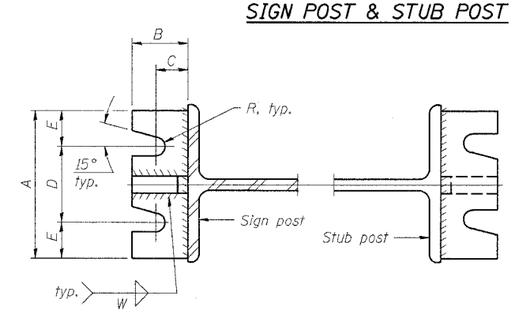

SECTION A-A

SECTION B-B

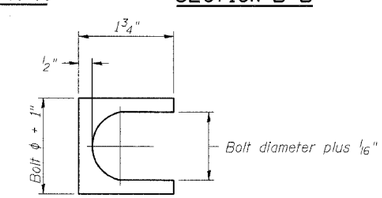

SHIM DETAIL

Furnish two 0.01" thick and two 0.03" thick stainless steel or brass (ASTM B36) shims per post.

GENERAL NOTES

Posts shall be plumbed by using shims with post-to-stub post connection bolts snug tight only. Final tightening of all High Strength Bolts shall be in accordance with Article 727.05 and threads at the junction of the bolt and nut shall be burred or center punched to prevent the nut from loosening.

LOADING: 80 m.p.h. wind with 30% gust factor, normal to sign.

DESIGN STRESSES:
Structural steel - 20,000 p.s.i.
Reinforcing steel - 20,000 p.s.i.
Concrete - 1,400 p.s.i.
Footing soil pressure - 2,000 p.s.f.

After fabrication, the post, fuse plate and upper 6", min. of the stub post shall be hot-dip galvanized in accordance with AASHTO M111. All bolts, nuts and washers shall be hot-dip galvanized in accordance with AASHTO M232.

Work this sheet with Base Sheet BAW-A-2.

NUMBER	REVISION	DATE

BREAK-AWAY WIDE FLANGE STEEL SIGN POST DETAILS

BAW-A-1 6/01/2007

(Sheet 1 of 2)

PLOT DATE = 8/28/2007
FILE NAME = c:\pwworking\94\94967\sht\bt94_94967.dgn
PLOT SCALE = 20.0000 ' / IN.
USER NAME = steffenmk