F.A.P. RTE.	SECTION	COUNTY	TOTAL SHEETS	SHEET NO.
742	37RS-6	OGLE	69	49
STA. OGLE		TO STA.		
FED. ROAD DIST. NO.	ILLINOIS	FED. AID PROJECT		

CONTRACT NO. 64626

INLET SPECIAL

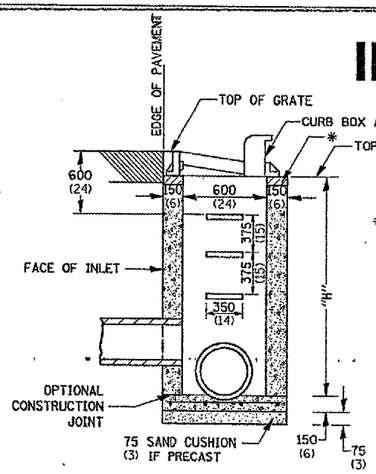

SEC. A-A

* THE WALL ADJUSTMENTS SHALL BE MADE WITH CONCRETE BUILDING BRICK OR CLASS SI CONCRETE.

THE HEIGHT OF THE BOX MAY BE CONSTRUCTED 150 (6) SHORT TO ALLOW FOR FIELD ADJUSTMENTS.

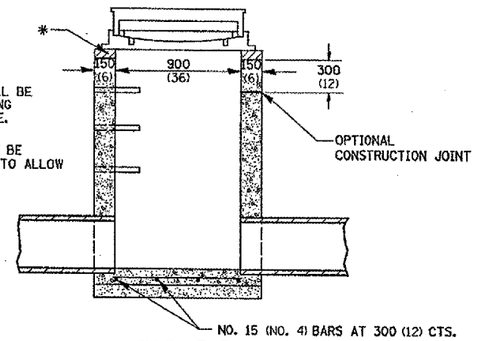

SEC. B-B

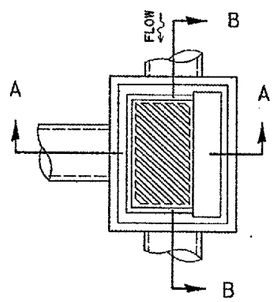

NOTES

SEE STANDARD 602701 FOR DETAILS OF STEPS.

EXCEPT AS NOTED HEREON INLET SPECIAL SHALL BE CONSTRUCTED IN ACCORDANCE WITH SECTION 602 OF THE STANDARD SPECIFICATIONS.

THE SIDE WALLS MAY BE BUILT AS PRECAST SEGMENTED SECTIONS.

ALL VOIDS AROUND PIPE ENTRANCE, BOTH INSIDE AND OUTSIDE, SHALL BE SEALED WITH MORTAR.

WEIGHT OF CAST IRON FRAME & GRATE = 240 kg (530 lbs.) ± . STEPS SHALL BE OMITTED WHEN DEPTH OF "H" IS LESS THAN 1.5 m (5 ft).

DETAIL OF FRAME & GRATE

NOTES

CLASS SI CONCRETE OR PRECAST CONCRETE SHALL BE USED THROUGHOUT. PRECAST CONCRETE SHALL BE IN ACCORDANCE WITH SECTION 504.01 THRU 504.05 OF THE STANDARD SPECIFICATIONS EXCEPT THAT CONCRETE STRENGTH SHALL BE 27.5 MPa (4,000 psi) AFTER 28 DAYS.

THE CONTRACT UNIT PRICE EACH FOR INLET SPECIAL SHALL INCLUDE THE COST OF CONSTRUCTING THE INLET BOX, FURNISHING AND INSTALLING THE FRAME AND GRATE, THE CAST IRON STEPS (IF USED), THE PRECAST FLOOR SLABS, SAND CUSHION (WHEN USED) AND REINFORCEMENT BARS.

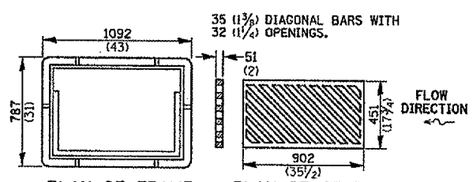

PLAN OF FRAME PLAN OF GRATE

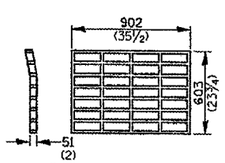

PLAN OF GRATE *

* THIS GRATE TO BE USED WITHOUT CURB BOX WHEN INLET IS IN DRIVEWAY.

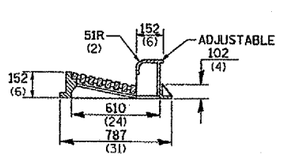

SECTION A-A

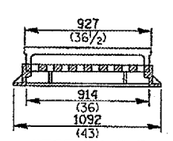

SECTION B-B

ALL DIMENSIONS ARE IN MILLIMETERS (INCHES) UNLESS OTHERWISE NOTED.

FRAME AND GRATE FOR INLET SPECIAL

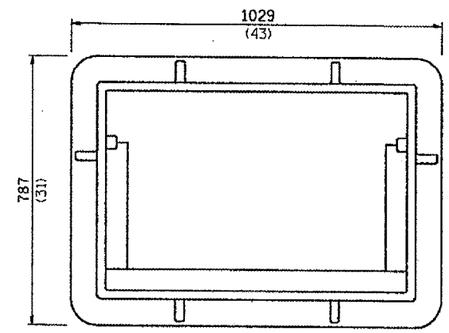

PLAN OF FRAME
WITHOUT GRATE AND CURB BOX

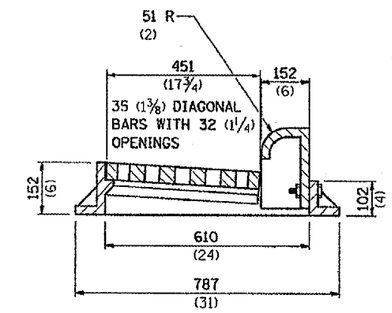

TRANSVERSE SECTION

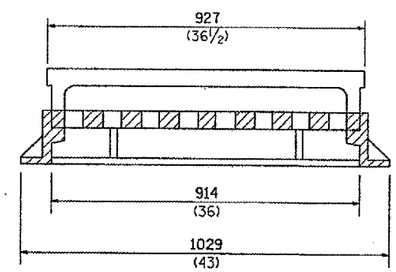

LONGITUDINAL SECTION

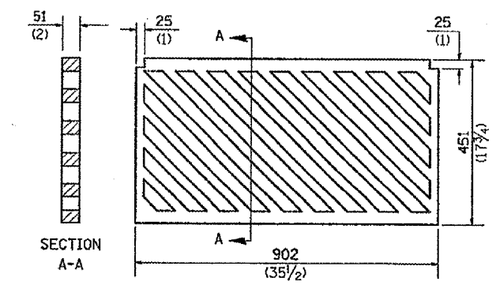

SECTION A-A

PLAN OF GRATE

ALL DIMENSIONS ARE IN MILLIMETERS (INCHES) UNLESS OTHERWISE NOTED.

R 3067
APPROXIMATE WEIGHT - 231 Kg. (510 LBS.)

PLOT DATE = Wed Aug 29 14:05:07 2006
FILE NAME = d:\gen_specs\d151101\d151101cvr.dgn
PLOT SCALE = 1.000000 ' / IN.
REFERENCE = $WSRC*