STATE OF ILLINOIS
DEPARTMENT OF TRANSPORTATION

ROUTE NO.	SECTION	COUNTY	TOTAL SHEETS	SHEET NO.
FAS 2247	13X-BR-1	BUREAU	51	17
FED. ROAD DIST. NO. 7	ILLINOIS	FED. AID PROJECT-		

SHEET NO. 5
19 SHEETS

Contract #64938

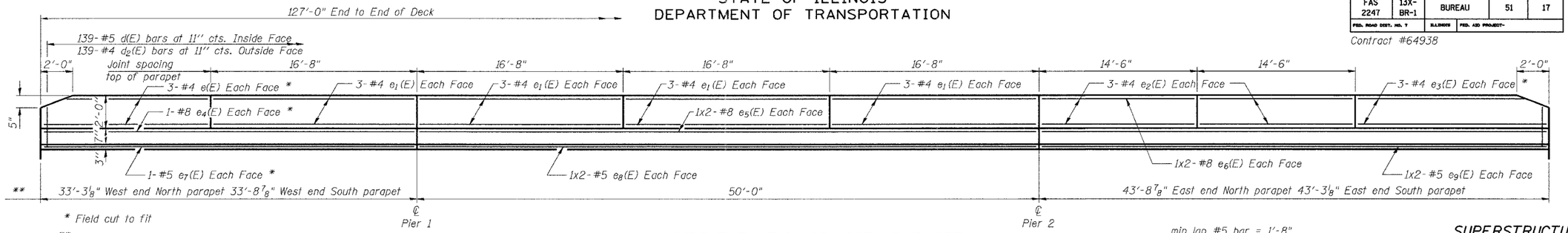

* Field cut to fit

** Aluminum sheeted joint spacing in base of parapet

INSIDE ELEVATION OF NORTH PARAPET

(SOUTH PARAPET MIRROR IMAGE AS NOTED)

min lap #5 bar = 1'-8"
min lap #8 bar = 3'-8"

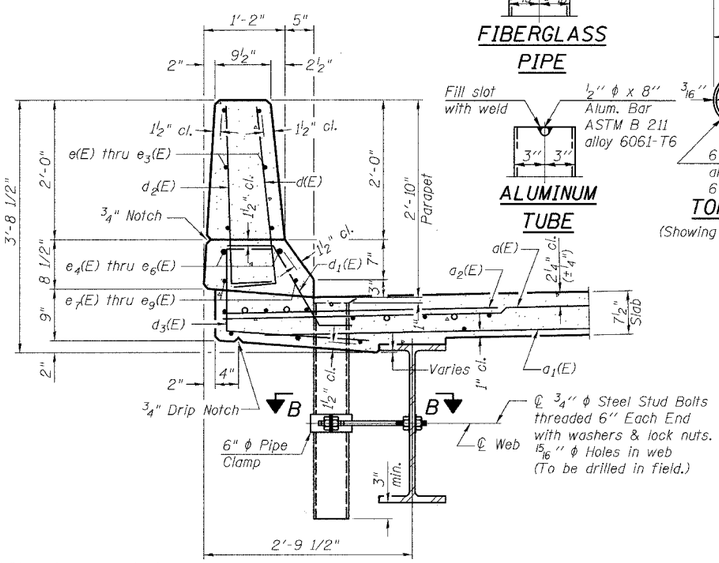

SECTION THRU PARAPET

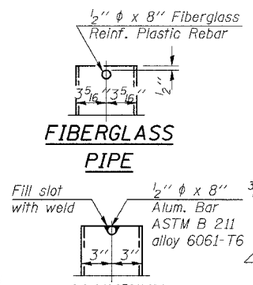

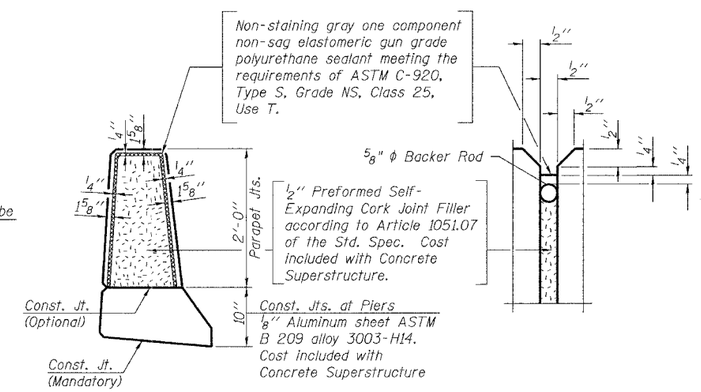

PARAPET JOINT DETAILS

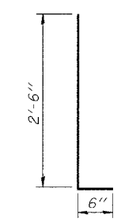

BARS d(E) & d2(E)

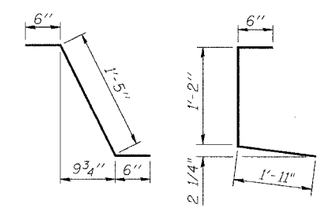

BAR d1(E) BAR d3(E)

SUPERSTRUCTURE BILL OF MATERIAL

Bar	No.	Size	Length	Shape
d(E)	204	#5	34'-7"	
d1(E)	153	#5	32'-7"	
d2(E)	204	#6	4'-6"	
d3(E)	4	#5	39'-11"	
b(E)	190	#5	26'-9"	
b1(E)	70	#6	26'-10"	
b2(E)	186	#5	22'-7"	
d(E)	278	#5	3'-0"	
d1(E)	266	#5	2'-5"	
d2(E)	278	#4	3'-0"	
d3(E)	278	#4	3'-7"	
d4(E)	12	#5	2'-7"	
e(E)	12	#4	16'-8"	
e1(E)	48	#4	16'-5"	
e2(E)	24	#4	14'-3"	
e3(E)	12	#4	14'-5"	
e4(E)	4	#8	33'-6"	
e5(E)	8	#8	26'-9"	
e6(E)	8	#8	25'-6"	
e7(E)	4	#5	33'-6"	
e8(E)	8	#5	25'-9"	
e9(E)	8	#5	22'-7"	
m(E)	4	#6	38'-7"	
m1(E)	6	#6	40'-4"	
m2(E)	24	#6	9'-0"	
m3(E)	10	#6	6'-7"	
m4(E)	4	#6	2'-11"	
s(E)	62	#5	5'-11"	
s1(E)	62	#4	8'-0"	
v(E)	64	#5	3'-7"	
Reinforcement Bars, Epoxy Coated			Pound	34410
Concrete Superstructure			Cu. Yds.	159.3
Bar Splicers			Each	64

Notes:
Floor Drains need not be painted.
Fiberglass pipe shall conform to ASTM D 2996, with short-time rupture strength hoop tensile stress of 30,000 p.s.i. minimum.

* Dimension as required by Pipe Clamp

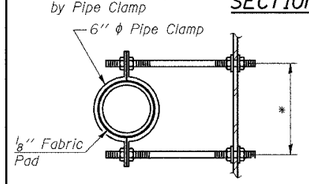

SECTION B-B

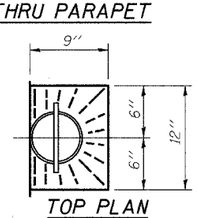

TOP PLAN

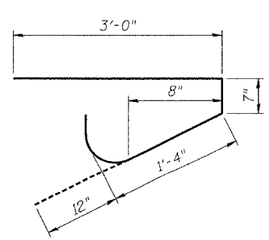

BAR s (E)

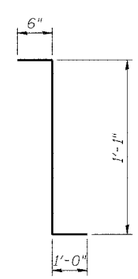

BAR d4(E)

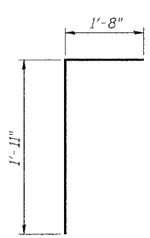

BAR v(E)

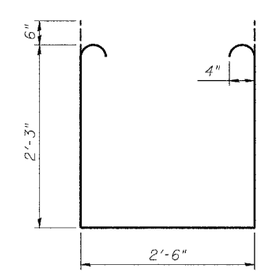

BAR s1(E)

Reinforcement bars designated (E) shall be epoxy coated.
Bars indicated thus 1 x 2-#5 etc. indicates 1 line of bars with 2 lengths per line.

SUPERSTRUCTURE DETAILS
FAS ROUTE 2247 (U.S. 6)
OVER BRUSH CREEK
SECTION 13X-BR-1
BUREAU COUNTY
STA. 1510+65.80
SN 006-0169

DESIGNED	JDA
CHECKED	JKC
DRAWN	NQ
CHECKED	JDA

S-1-D 10-22-04