STATE OF ILLINOIS
DEPARTMENT OF TRANSPORTATION

ROUTE NO.	SECTION	COUNTY	TOTAL SHEETS	SHEET NO.
F.A.P. 622	(128BR)I	FULTON	19	17
FED. ROAD DIST. NO. 7	ILLINOIS	FED. AID PROJECT-		

SHEET NO. 8
10 SHEETS

Contract #68483

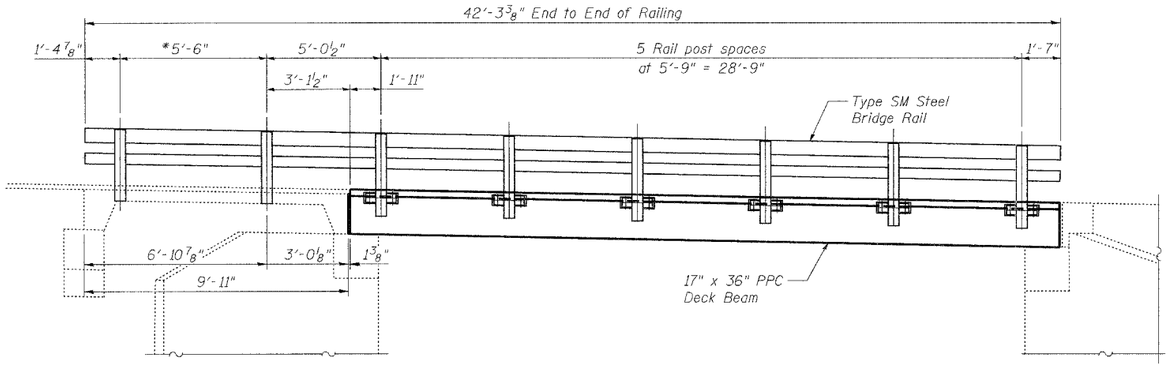

* Attach posts to existing anchor devices in precast approach beams. Field verify prior to fabrication of Type SM Steel Bridge Rail.

WEST BRIDGE RAIL ELEVATION

(Looking East)

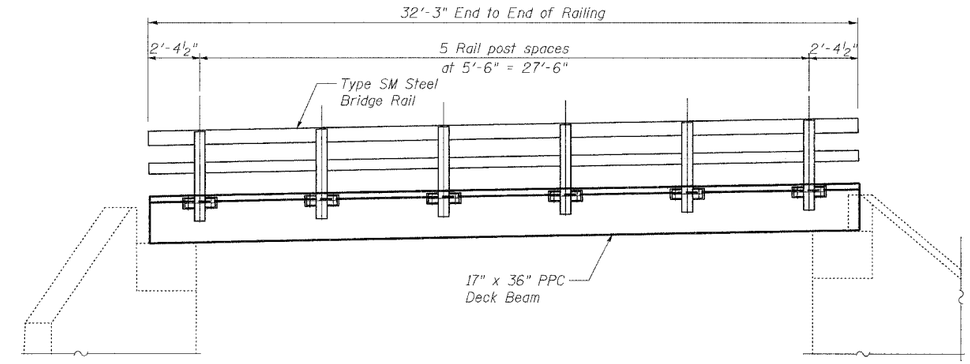

EAST BRIDGE RAIL ELEVATION

(Looking West)

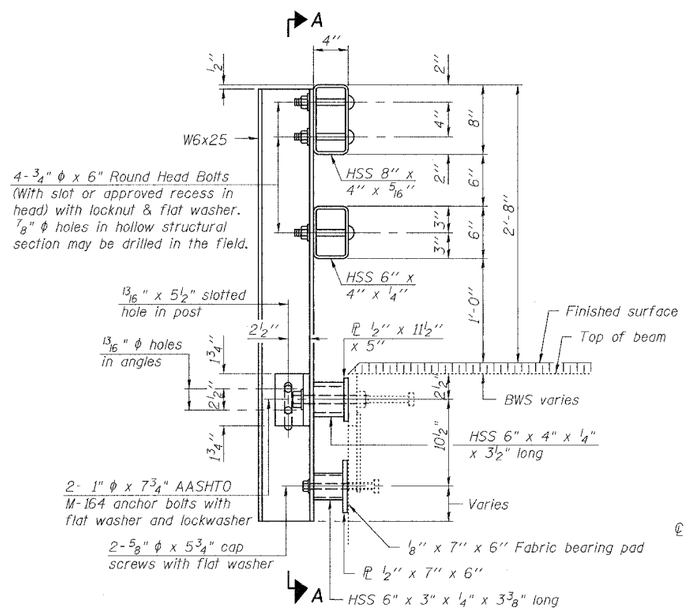

SECTION AT RAIL POST - PRECAST APPROACH BEAM

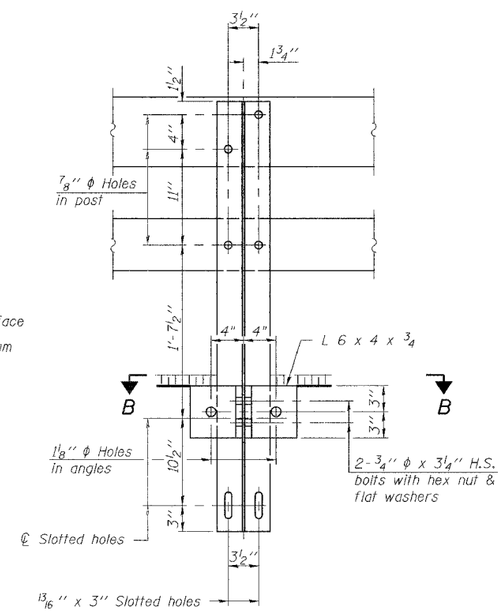

SECTION A-A

(at Precast Approach Beam)

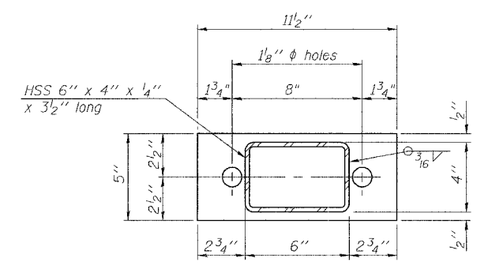

PL 1/2" x 11 1/2" x 5"

(at Precast Approach Beam)

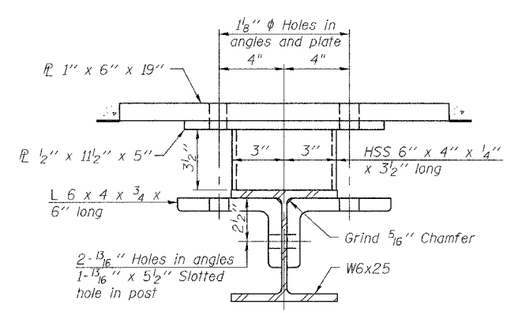

SECTION B-B

(at Precast Approach Beam)

DESIGNED BWP	THOUVENOT, WADE & MOERCHEN, INC. ENGINEERS • SURVEYORS • PLANNERS
CHECKED ALN	TWM
DRAWN KBF	CORPORATE OFFICE 4940 OLD COLLINSVILLE RD. SWANSEA, ILLINOIS 62226 TEL (618) 624-4488 FAX (618) 624-5688 E-MAIL: corp@twm-inc.com
CHECKED KPC	

BRIDGE RAIL DETAILS
ILLINOIS ROUTE 97 OVER
BIG CREEK TRIBUTARY
F.A.P. RTE 622 SECTION (128BR)I
FULTON COUNTY
SN 029-0026