STATE OF ILLINOIS
DEPARTMENT OF TRANSPORTATION

ROUTE NO.	SECTION	COUNTY	TOTAL SHEETS	SHEET NO.
F.A.P. 717	(111B)BR	DEWITT	53	27
FED. ROAD DIST. NO. 7	ILLINOIS	FED. AID PROJECT-		

SHEET NO. 7
16 SHEETS

Contract #70387

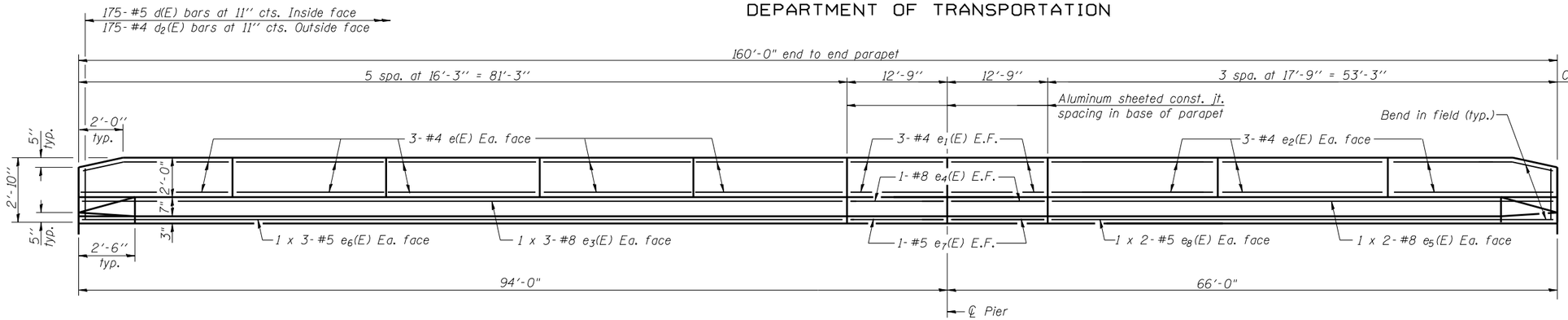

INSIDE ELEVATION OF PARAPET

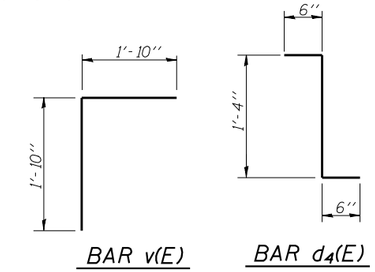

MIN. BAR LAPS
#5 bar = 1'-8''
#8 bar = 3'-5''

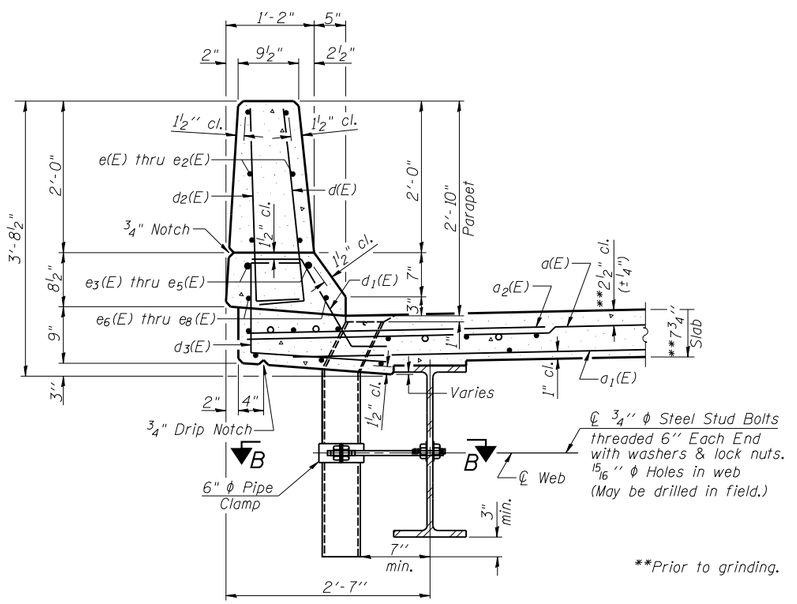

SECTION THRU PAPAPET

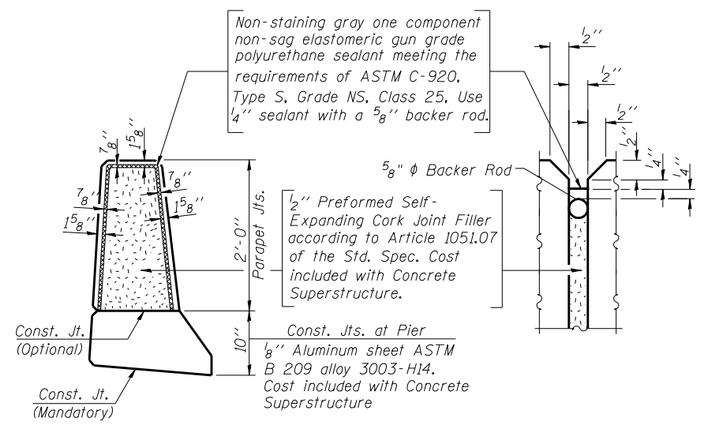

PARAPET JOINT DETAILS

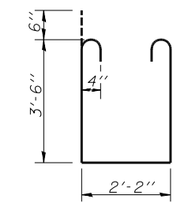

BAR s1(E)

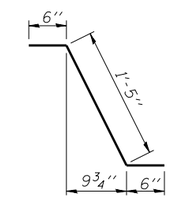

BAR d1(E)

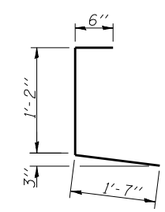

BAR d3(E)

SUPERSTRUCTURE BILL OF MATERIAL

Bar	No.	Size	Length	Shape
a(E)	240	#5	34'-6''	
a1(E)	192	#5	34'-0''	
a2(E)	480	#6	6'-0''	
a3(E)	4	#5	39'-10''	
b(E)	228	#5	28'-0''	
b1(E)	35	#6	47'-9''	
b2(E)	180	#5	33'-4''	
d(E)	350	#5	3'-0''	
d1(E)	338	#5	2'-5''	
d2(E)	350	#4	3'-0''	
d3(E)	350	#4	3'-3''	
d4(E)	12	#5	2'-4''	
e(E)	60	#4	16'-0''	
e1(E)	24	#4	12'-6''	
e2(E)	36	#4	17'-6''	
e3(E)	12	#8	29'-3''	
e4(E)	8	#8	12'-6''	
e5(E)	8	#8	28'-3''	
e6(E)	12	#5	28'-2''	
e7(E)	8	#5	12'-6''	
e8(E)	8	#5	28'-3''	
m(E)	4	#6	38'-2''	
m1(E)	6	#6	40'-2''	
m2(E)	24	#6	9'-8''	
m3(E)	10	#6	6'-7''	
m4(E)	4	#6	2'-8''	
s(E)	72	#5	5'-10''	
s1(E)	72	#4	10'-2''	
v(E)	68	#5	3'-8''	
Reinforcement Bars, Epoxy Coated			Pound	44810
Concrete Superstructure			Cu. Yds.	190.8

Reinforcement bars designated (E) shall be epoxy coated.
Bars indicated thus 1 x 2-#5 etc. indicates 1 line of bars with 2 lengths per line.

Note: Fiberglass pipe shall conform to ASTM D 2996, with short-time rupture strength hoop tensile stress of 30,000 p.s.i. minimum.
Floor drains need not be painted.

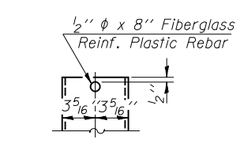

FIBERGLASS PIPE

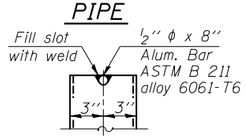

ALUMINUM TUBE

*Dimension as required by Pipe Clamp

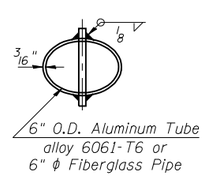

TOP PLAN
(Showing Aluminum Tube)

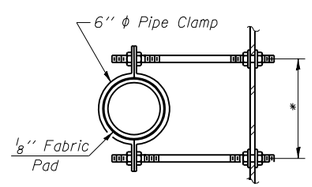

SECTION B-B

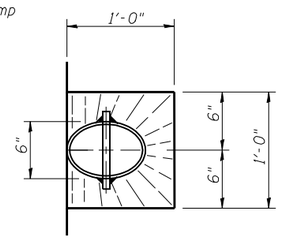

TOP PLAN
(Showing Tube Section)

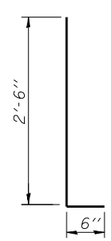

BARS d(E) & d2(E)

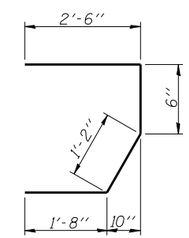

BAR s(E)

SUPERSTRUCTURE DETAILS
F.A.P. RT. 717 SEC. (111B)BR
DEWITT COUNTY
STATION 1069+54.00
STRUCTURE NO. 020-0063

DESIGNED	Stephen M. Ryan
CHECKED	Angela J. Bryant
DRAWN	R. Sommer
CHECKED	S.M.R./F.T.

September 29, 2006
EXAMINED Thomas J. Domagalski — ENGINEER OF BRIDGE DESIGN
PASSED Ralph E. Anderson — ENGINEER OF BRIDGES AND STRUCTURES