F.A.P. RTE.	SECTION	COUNTY	TOTAL SHEETS	SHEET NO.
336	99-00232-00-WR	KANE	97	45
STA.	TO STA.			
FED. ROAD DIST. NO.	ILLINOIS	FED. AID PROJECT		

CONTRACT NO.: 83738

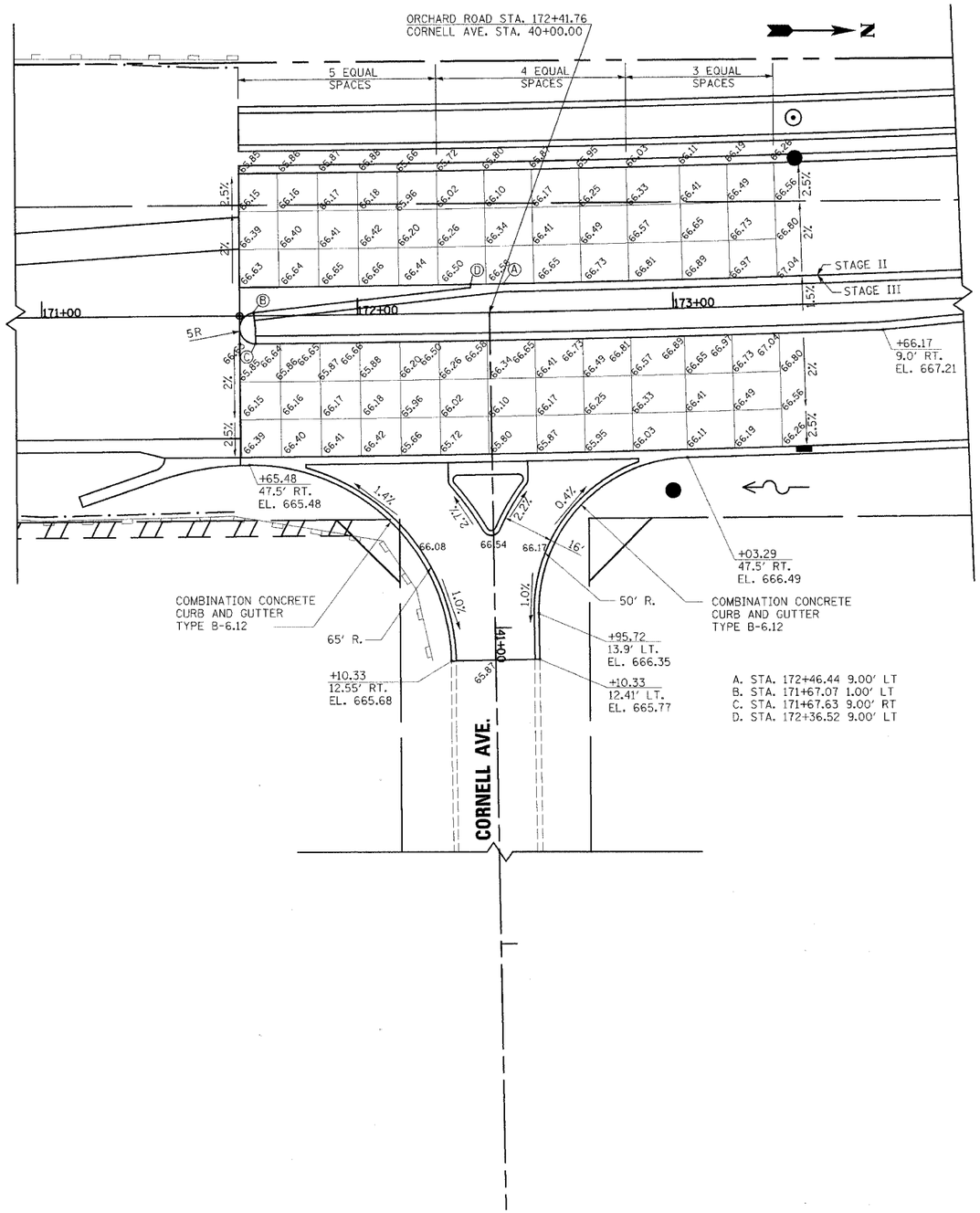

A. STA. 172+46.44 9.00' LT
B. STA. 171+67.07 1.00' LT
C. STA. 171+67.63 9.00' RT
D. STA. 172+36.52 9.00' LT

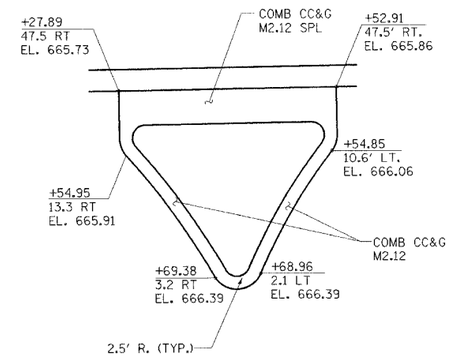

ISLAND DETAIL

rjngroup
Excellence through Ownership
200 West Front Street
Wheaton, Il 60187

REVISIONS	
NAME	DATE

ILLINOIS DEPARTMENT OF TRANSPORTATION
KANE COUNTY DIVISION OF TRANSPORTATION
ORCHARD ROAD RECONSTRUCTION

INTERSECTION DETAIL
CORNELL AVE.

SCALE: VERT. HORIZ. 1"=20'
DATE: 11/04/05
DRAWN BY: RJN
CHECKED BY: SPF

11/6/2005 12:52:35 PM K:\IL77700\Cad\Design_N\77700_Int_Det_Cornell.dgn