F.A. RTE.	SECTION	COUNTY	TOTAL SHEETS	SHEET NO.
2666	00-00254-01-BR	LAKE	70	26
STA. 98+50		TO STA. 107+57		
FED. ROAD DIST. NO.	ILLINOIS	FED. AID PROJECT		

Sheet 3 of 35 Sheets
PROJECT NO. BHM-8003(213)
CONTRACT NO. 83875

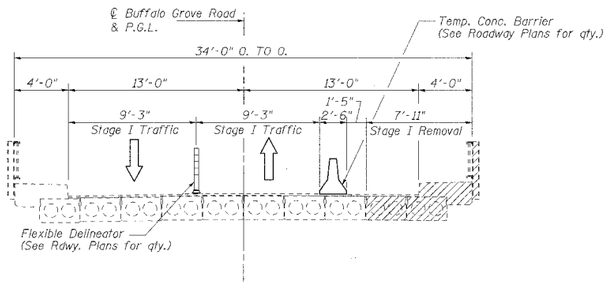

CROSS SECTION - STAGE I REMOVAL
(Looking North)

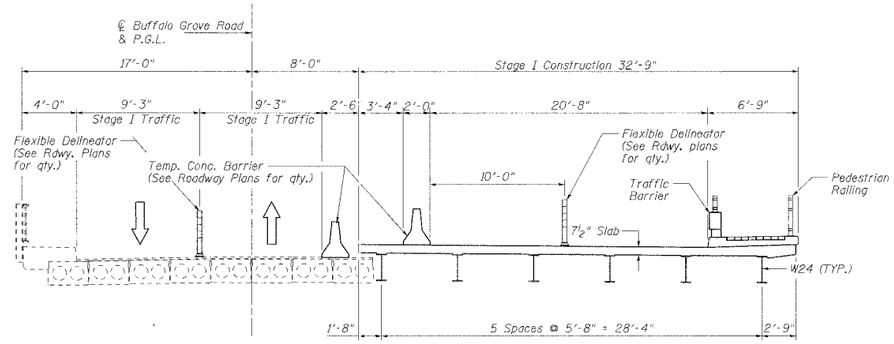

CROSS SECTION - STAGE I CONSTRUCTION
(Looking North)

LEGEND

- Deck Removal
- Existing Structure
- Proposed Structure

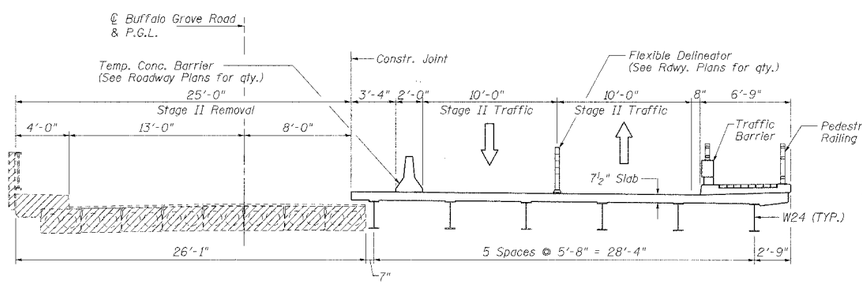

CROSS SECTION - STAGE II REMOVAL
(Looking North)

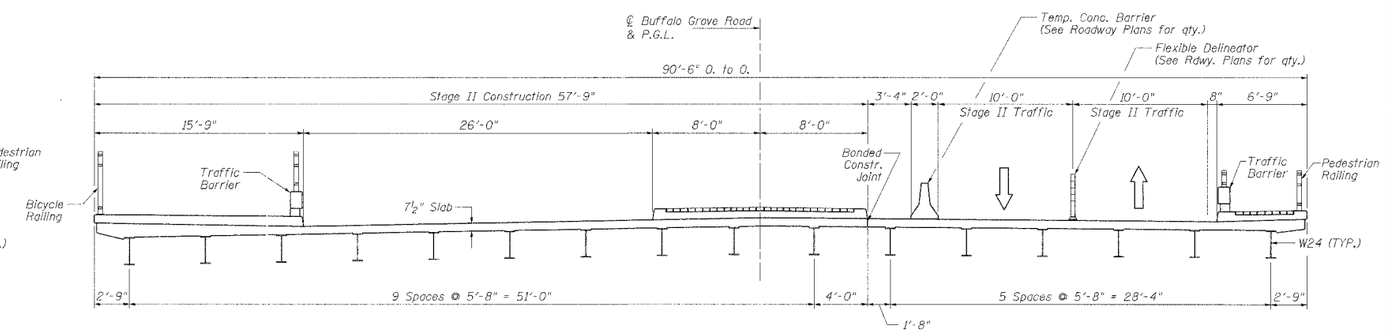

CROSS SECTION - STAGE II CONSTRUCTION
(Looking North)

NOTES:

1. For details of Temporary Concrete Barrier see sheet 4 of 34.
2. For details of Flexible Delineator see roadway plans.

REVISIONS	
NAME	DATE

CMT
CRAWFORD MURPHY & TILLY, INC.
CONSULTING ENGINEERS
SPRINGFIELD, IL ■ AURORA, IL ■ ST. LOUIS, MO
ROCKFORD, IL ■ PEORIA, IL ■ CHICAGO, IL

LAKE COUNTY DIVISION OF TRANSPORTATION
STAGE CONSTRUCTION DETAILS

BUFFALO GROVE ROAD
AT INDIAN CREEK BRIDGE
SECTION 00-00254-01-BR STATION 101+50.00
LAKE COUNTY STRUCTURE NO. 049-3043
SCALE: NONE DRAWN BY: TBW
DATE: 7/21/06 CHECKED BY: ATI, WK

PLAN | SURVEYED | PLOTTED | ALIGNMENT CHECKED | STA. NO. BEG. OF BRIDGE CHECKED | NOTE BOOK NO. | BY | DATE

PROFILE | SURVEYED | PLOTTED | GRADES CHECKED | STA. NO. BEG. OF BRIDGE CHECKED | NOTE BOOK NO. | BY | DATE

I:\lakeco\0220113\draw\sheets\struct\6-16-06\stage constr details.dgn