CONTRACT NO. 98982

F.A.I. RTE.	SECTION	COUNTY	TOTAL SHEETS	SHEET NO.
57	*	VARIOUS	21	4A
STA. _____		TO STA._____		
FED. ROAD DIST. NO. _	ILLINOIS	FED. AID PROJECT		

* D-9 SAFETY FY 07-1

MIXTURE REQUIREMENTS

Location(s):	Mow Strip
AC/PG:	PG58-22
RAP % (Max):	50
Design Air Voids:	2.0 %, 30 Gyration Superpave Design
Mixture Composition: (Gradation Mixture)	Bituminous Aggregate Mixture, Superpave
Friction Aggregate:	None

TYPICAL SECTION #3

CABLE BARRIER SYSTEM
I-57 WILLIAMSON COUNTY

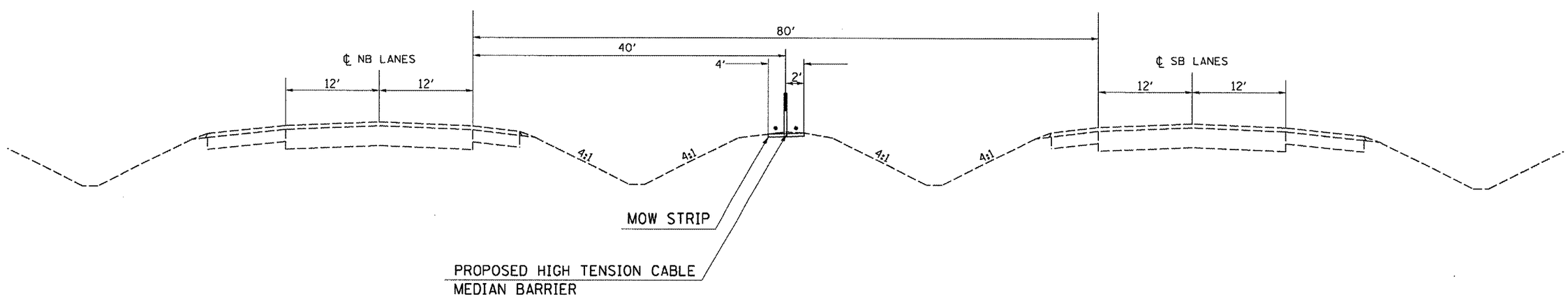

* SLOPE SHOULDER ½" PER FOOT TO ONE SIDE

TO BE USED
STA 5+00 TO STA 40+00
STA 43+00 TO STA 50+00
STA 78+50 TO STA 165+50

PLOT DATE = 8/21/2006
FILE NAME = c:\projects\d984186\d984186sum32
PLOT SCALE = 100.4989 ' / IN.
USER NAME = skapor-dgd