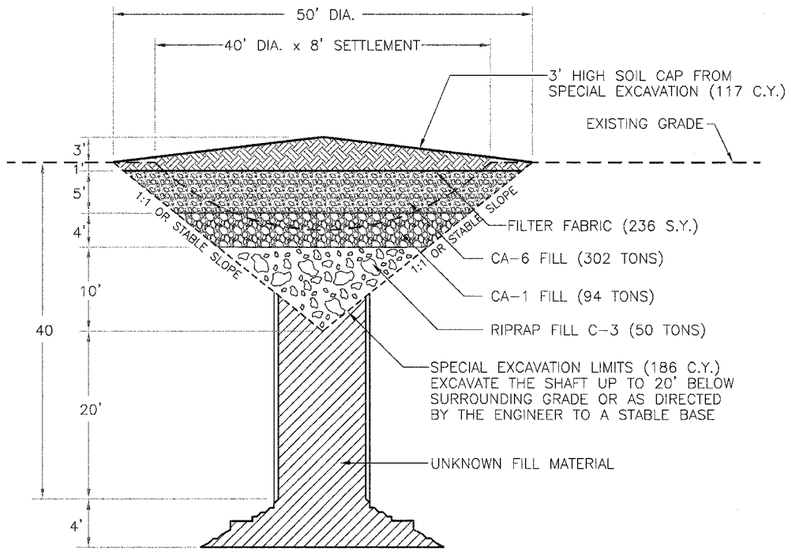

H / 12 AIR SHAFT FILLING DETAIL
NOT TO SCALE

NOTE: REMOVE ALL TRASH AND DEBRIS FROM SHAFT TO A DEPTH OF 20' TO STABLE EXISTING FILL OR AS DIRECTED BY PROJECT ENGINEER.

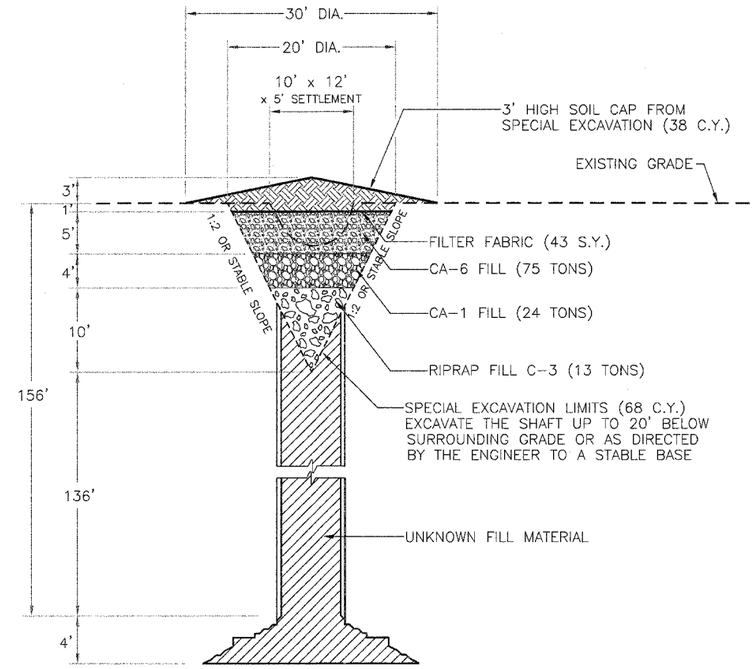

J / 12 AIR SHAFT FILLING DETAIL
NOT TO SCALE

NOTE: REMOVE ALL TRASH AND DEBRIS FROM SHAFT TO A DEPTH OF 20' TO STABLE EXISTING FILL OR AS DIRECTED BY PROJECT ENGINEER.

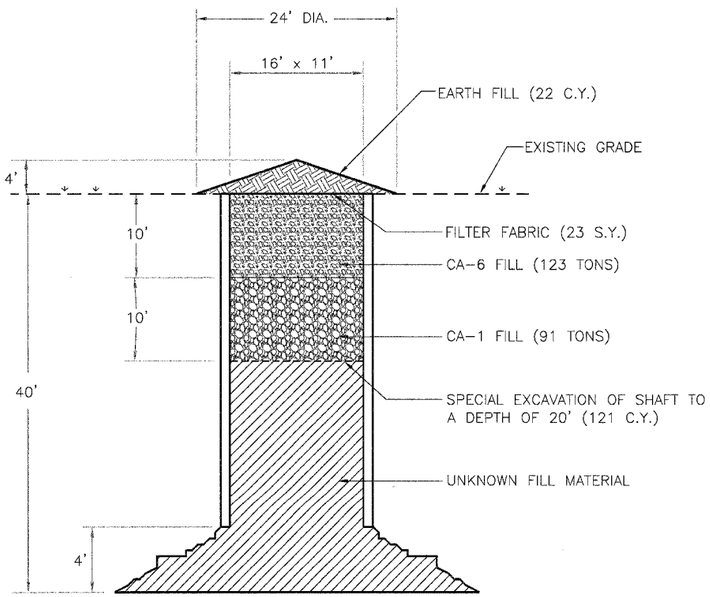

I / 12 SHAFT FILLING DETAIL
NOT TO SCALE

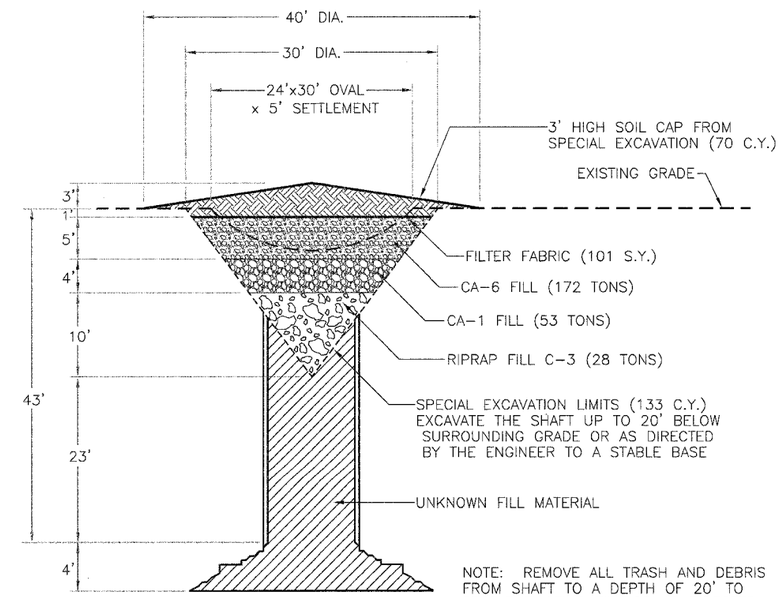

NOTE: REMOVE ALL TRASH AND DEBRIS FROM SHAFT TO A DEPTH OF 20' TO STABLE EXISTING FILL OR AS DIRECTED BY PROJECT ENGINEER.

K / 12 SHAFT FILLING DETAIL
NOT TO SCALE

State of Illinois
Department of Natural Resources

Silver Creek Collieries 'Group' Reclamation Project
AML-GFUE-0503
Fulton County

Drawn By: M-LF Date: 10/11/2005
Checked By:

Detail Sheet

Sheet
12 of 12