STATE OF ILLINOIS
DEPARTMENT OF TRANSPORTATION

ROUTE NO.	SECTION	COUNTY	TOTAL SHEETS	SHEET NO.
F. A. I. 80/94	*	COOK	870	542
FED. ROAD DIST. NO. 1	ILLINOIS	FED. AID PROJECT-		

SHEET NO. 28
91 SHEETS

(0203.1 & 0312-708W) R-3 CONTRACT NO. 62108

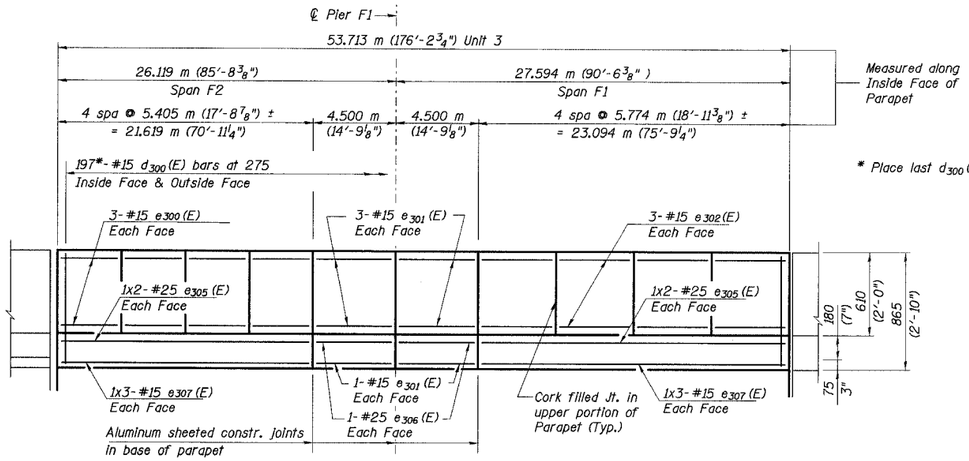

* Place last d_{300} (E) bar at NE Corner parallel to ℄ Pier 2.

INSIDE ELEVATION OF EAST PARAPET

(Looking East)

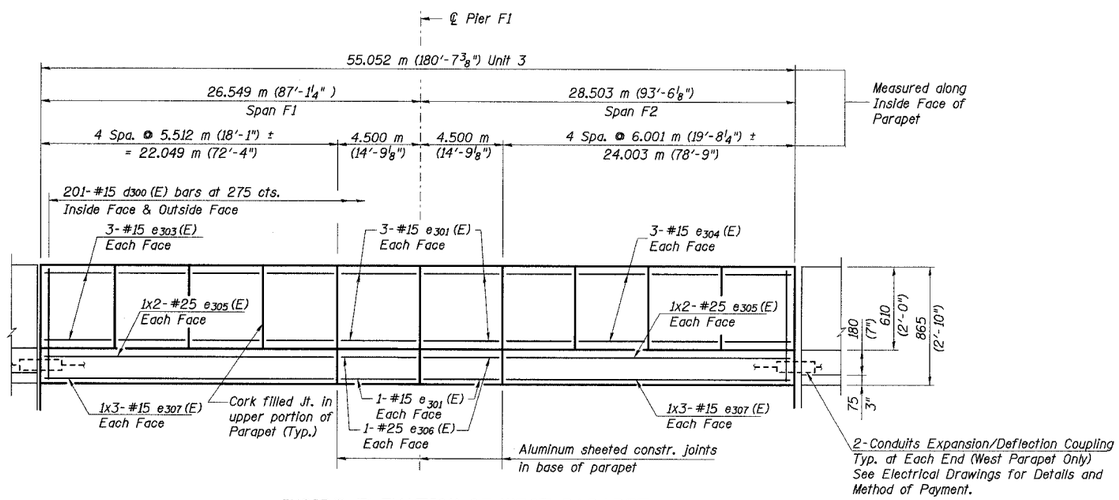

INSIDE ELEVATION OF WEST PARAPET

(Looking West)

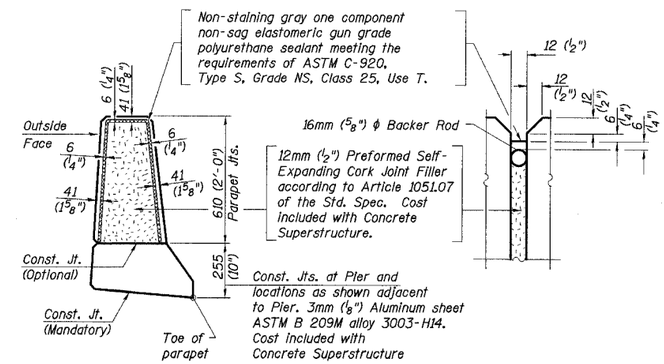

PARAPET JOINT DETAIL

Notes:

1. Work this sheet with Sheet Nos. 26, 27 & 30 of 91 Sheets.
2. Min. lap splice length for parapet reinforcement :
   #15 - 640
   #20 - 790
   #25 - 1320
3. For details and method of payment of conduit, see Electrical Drawings.
4. All horizontal dimensions shown are taken at toe of parapet.
5. Reinforcement bars designated (E) shall be epoxy coated.
6. Bars indicated thus 4x6-#15 etc. indicates 4 lines of bars with 6 lengths per line.
7. All dimensions are in millimeters (mm) except as noted.

DESIGNED	JAP
CHECKED	JY
DRAWN	LK
CHECKED	JY

ILLINOIS DEPARTMENT OF TRANSPORTATION
I-94 EAST BOUND / IL 394 SOUTH BOUND
PARAPET ELEVATION
SPANS F1 & F2 - UNIT 3
RAMP F OVER THORN CREEK
F.A.P. 332 SECTION (0203.1 & 0312-708W) R-3
COOK COUNTY
STA. 440+704.350 STRUCTURE NO. 016-2845
DATE JUL 18, 2005
SCALE ---
HNTB

JBeauchamp
N:\484650\Cadd\bs\SN_2800\cds\CTR_19_2800\su1903346_2800.dgn
11-JUL-2005 11:32