F.A.I. RTE.	SECTION	COUNTY	TOTAL SHEETS	SHEET NO.
80/94	*	COOK	870	734
STA.		TO STA.		
FED. ROAD DIST. NO.		ILLINOIS	FED. AID PROJECT	

*(0203.1 & 0312-708W) R-3 CONTRACT NO. 62108

DRAINAGE STRUCTURE TYPE 2.4mx0.9m

REINFORCEMENT BARS SCHEDULE

TYPE	H METERS	a_1 BARS			b_1 BARS			h_1 BARS			h_2 BARS			h_3 BARS			n_1 BARS			n_2 BARS			v_1 BARS			v_2 BARS		
		SIZE	NO.	LENGTH	SIZE	NO.	LENGTH	SIZE	NO.	LENGTH	SIZE	NO.	LENGTH	SIZE	NO.	LENGTH	SIZE	NO.	LENGTH	SIZE	NO.	LENGTH	SIZE	NO.	LENGTH	SIZE	NO.	LENGTH
1	>2.4	#15	16	1.2 m	#10	8	2.72 m	#15	16	4.38 m	#15	16	1.8 m	#15	16	3.3 m	#15	30	1.52 m	#10	30	1.09 m	#15	30	2.2 m	#10	30	2.2 m
2	2.6	#15	16	1.2 m	#10	8	2.72 m	#15	18	4.38 m	#15	18	1.8 m	#15	18	3.3 m	#15	30	1.52 m	#10	30	1.09 m	#15	30	2.4 m	#10	30	2.4 m
3	2.7	#15	16	1.2 m	#10	8	2.72 m	#15	18	4.38 m	#15	18	1.8 m	#15	18	3.3 m	#15	30	1.52 m	#10	30	1.09 m	#15	30	2.5 m	#10	30	2.5 m
4	2.9	#15	16	1.2 m	#10	8	2.72 m	#15	20	4.38 m	#15	20	1.8 m	#15	20	3.3 m	#15	30	1.52 m	#10	30	1.09 m	#15	30	2.7 m	#10	30	2.7 m
5	3.0	#15	16	1.2 m	#10	8	2.72 m	#15	20	4.38 m	#15	20	1.8 m	#15	20	3.3 m	#20	30	1.52 m	#10	30	1.09 m	#20	30	2.8 m	#10	30	2.8 m
6	3.2	#15	16	1.2 m	#10	8	2.72 m	#15	22	4.38 m	#15	22	1.8 m	#15	22	3.3 m	#20	30	1.52 m	#10	30	1.09 m	#20	30	2.9 m	#10	30	2.9 m
7	3.4	#15	16	1.2 m	#10	8	2.72 m	#15	22	4.38 m	#15	22	1.8 m	#15	22	3.3 m	#20	30	1.52 m	#10	30	1.09 m	#20	30	3.1 m	#10	30	3.1 m
8	3.5	#15	16	1.2 m	#10	8	2.72 m	#15	24	4.38 m	#15	24	1.8 m	#15	24	3.3 m	#20	30	1.52 m	#10	30	1.09 m	#20	30	3.2 m	#10	30	3.2 m
9	3.7	#15	16	1.2 m	#10	8	2.72 m	#15	24	4.38 m	#15	24	1.8 m	#15	24	3.3 m	#20	30	1.52 m	#10	30	1.09 m	#20	30	3.4 m	#10	30	3.4 m
10	3.8	#15	16	1.2 m	#10	8	2.72 m	#15	26	4.38 m	#15	26	1.8 m	#15	26	3.3 m	#20	30	1.52 m	#10	30	1.09 m	#20	30	3.6 m	#10	30	3.6 m
11	4.0	#15	16	1.2 m	#10	8	2.72 m	#15	26	4.38 m	#15	26	1.8 m	#15	26	3.3 m	#20	30	1.52 m	#10	30	1.09 m	#20	30	3.7 m	#10	30	3.7 m
12	4.1	#15	16	1.2 m	#10	8	2.72 m	#15	28	4.38 m	#15	28	1.8 m	#15	28	3.3 m	#20	30	1.52 m	#10	30	1.09 m	#20	30	3.9 m	#10	30	3.9 m
13	4.3	#15	16	1.2 m	#10	8	2.72 m	#15	56	4.38 m	#20	28	1.8 m	#20	28	3.3 m	#20	48	1.52 m	#15	30	1.09 m	#20	48	4.0 m	#15	30	4.0 m
14	4.8	#15	16	1.2 m	#10	8	2.72 m	#15	64	4.38 m	#20	32	1.8 m	#20	32	3.3 m	#20	48	1.52 m	#15	30	1.09 m	#20	48	4.6 m	#15	30	4.6 m
15	5.5	#15	16	1.2 m	#10	8	2.72 m	#15	72	4.38 m	#20	36	1.8 m	#20	36	3.3 m	#20	48	1.52 m	#15	30	1.09 m	#20	48	5.3 m	#15	30	5.3 m
16	6.0	#15	16	1.2 m	#10	8	2.72 m	#15	78	4.38 m	#20	40	1.8 m	#20	40	3.3 m	#20	48	1.52 m	#15	30	1.09 m	#20	48	5.9 m	#15	30	5.9 m
17	6.7	#15	16	1.2 m	#10	8	2.72 m	#15	86	4.38 m	#20	44	1.8 m	#20	44	3.3 m	#20	48	1.52 m	#15	30	1.09 m	#20	48	6.5 m	#15	30	6.5 m

DRAINAGE STRUCTURE TYPE 2.4mx1.5m

REINFORCEMENT BARS SCHEDULE

TYPE	H METERS	a_1 BARS			b_1 BARS			h_1 BARS			h_2 BARS			h_3 BARS			n_1 BARS			n_2 BARS			v_1 BARS			v_2 BARS		
		SIZE	NO.	LENGTH	SIZE	NO.	LENGTH	SIZE	NO.	LENGTH	SIZE	NO.	LENGTH	SIZE	NO.	LENGTH	SIZE	NO.	LENGTH	SIZE	NO.	LENGTH	SIZE	NO.	LENGTH	SIZE	NO.	LENGTH
1	>2.4	#15	16	1.8 m	#10	12	2.72 m	#15	16	4.9 m	#15	16	2.4 m	#15	16	3.3 m	#15	34	1.52 m	#10	34	1.09 m	#15	34	2.2 m	#10	34	2.2 m
2	2.6	#15	16	1.8 m	#10	12	2.72 m	#15	18	4.9 m	#15	18	2.4 m	#15	18	3.3 m	#15	34	1.52 m	#10	34	1.09 m	#15	34	2.4 m	#10	34	2.4 m
3	2.7	#15	16	1.8 m	#10	12	2.72 m	#15	18	4.9 m	#15	18	2.4 m	#15	18	3.3 m	#15	34	1.52 m	#10	34	1.09 m	#15	34	2.5 m	#10	34	2.5 m
4	2.9	#15	16	1.8 m	#10	12	2.72 m	#15	20	4.9 m	#15	20	2.4 m	#15	20	3.3 m	#15	34	1.52 m	#10	34	1.09 m	#15	34	2.7 m	#10	34	2.7 m
5	3.0	#15	16	1.8 m	#10	12	2.72 m	#15	20	4.9 m	#15	20	2.4 m	#15	20	3.3 m	#20	34	1.52 m	#10	34	1.09 m	#20	34	2.8 m	#10	34	2.8 m
6	3.2	#15	16	1.8 m	#10	12	2.72 m	#15	22	4.9 m	#15	22	2.4 m	#15	22	3.3 m	#20	34	1.52 m	#10	34	1.09 m	#20	34	2.9 m	#10	34	2.9 m
7	3.4	#15	16	1.8 m	#10	12	2.72 m	#15	22	4.9 m	#15	22	2.4 m	#15	22	3.3 m	#20	34	1.52 m	#10	34	1.09 m	#20	34	3.1 m	#10	34	3.1 m
8	3.5	#15	16	1.8 m	#10	12	2.72 m	#15	24	4.9 m	#15	24	2.4 m	#15	24	3.3 m	#20	34	1.52 m	#10	34	1.09 m	#20	34	3.2 m	#10	34	3.2 m
9	3.7	#15	16	1.8 m	#10	12	2.72 m	#15	24	4.9 m	#15	24	2.4 m	#15	24	3.3 m	#20	34	1.52 m	#10	34	1.09 m	#20	34	3.4 m	#10	34	3.4 m
10	3.8	#15	16	1.8 m	#10	12	2.72 m	#15	26	4.9 m	#15	26	2.4 m	#15	26	3.3 m	#20	34	1.52 m	#10	34	1.09 m	#20	34	3.6 m	#10	34	3.6 m
11	4.0	#15	16	1.8 m	#10	12	2.72 m	#15	26	4.9 m	#15	26	2.4 m	#15	26	3.3 m	#20	34	1.52 m	#10	34	1.09 m	#20	34	3.7 m	#10	34	3.7 m
12	4.1	#15	16	1.8 m	#10	12	2.72 m	#15	28	4.9 m	#15	28	2.4 m	#15	28	3.3 m	#20	34	1.52 m	#10	34	1.09 m	#20	34	3.9 m	#10	34	3.9 m
13	4.3	#15	16	1.8 m	#10	12	2.72 m	#15	56	4.9 m	#20	28	2.4 m	#20	28	3.3 m	#20	52	1.52 m	#15	34	1.09 m	#20	52	4.0 m	#15	34	4.0 m
14	4.8	#15	16	1.8 m	#10	12	2.72 m	#15	64	4.9 m	#20	32	2.4 m	#20	32	3.3 m	#20	52	1.52 m	#15	34	1.09 m	#20	52	4.6 m	#15	34	4.6 m
15	5.5	#15	16	1.8 m	#10	12	2.72 m	#15	72	4.9 m	#20	36	2.4 m	#20	36	3.3 m	#20	52	1.52 m	#15	34	1.09 m	#20	52	5.3 m	#15	34	5.3 m
16	6.0	#15	16	1.8 m	#10	12	2.72 m	#15	78	4.9 m	#20	40	2.4 m	#20	40	3.3 m	#20	52	1.52 m	#15	34	1.09 m	#20	52	5.9 m	#15	34	5.9 m
17	6.7	#15	16	1.8 m	#10	12	2.72 m	#15	86	4.9 m	#20	44	2.4 m	#20	44	3.3 m	#20	52	1.52 m	#15	34	1.09 m	#20	52	6.5 m	#15	34	6.5 m

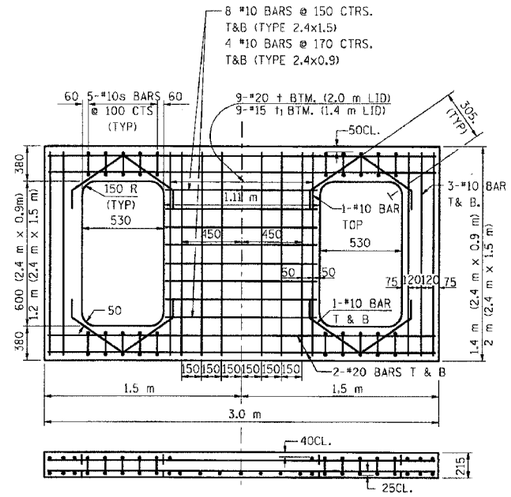

REINFORCED LID FOR
TYPE 20 & 22 FRAME & GRATE

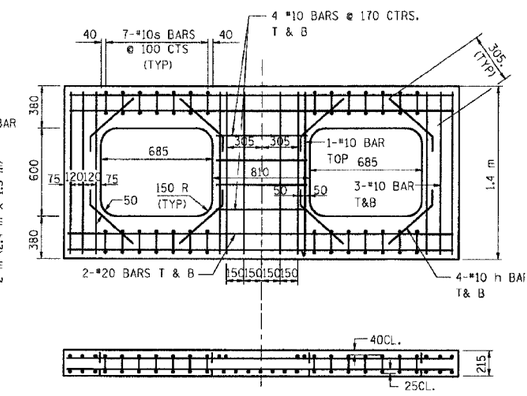

REINFORCED LID FOR
TYPE 21 FRAME & GRATE
(FOR USE IN SAG AREAS)

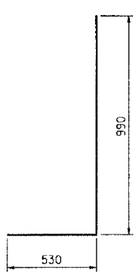

BAR n1

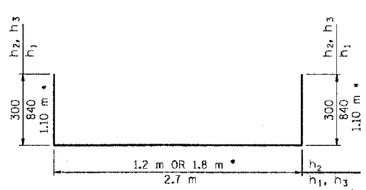

BAR h_1, h_2, h_3

* FOR TYPE 22 F & G

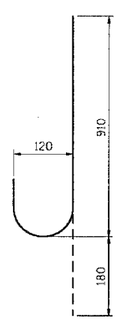

BAR n2

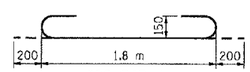

*20 BAR t

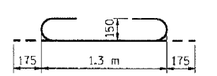

*15 BAR t1

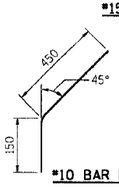

*10 BAR h

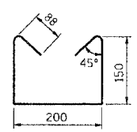

*10 BAR s

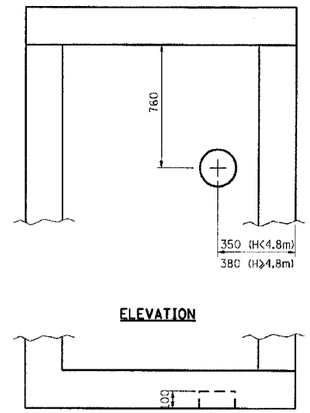

ELEVATION

PLAN

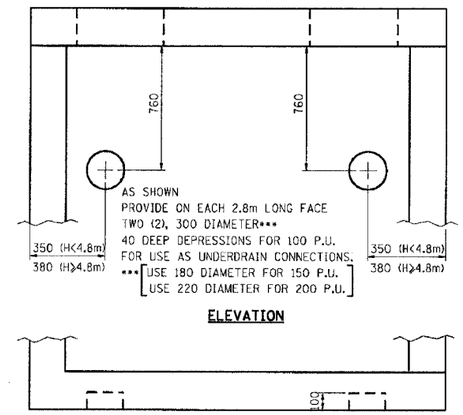

ELEVATION

PLAN

AS SHOWN
PROVIDE ON EACH FACE
ONE (1), 100 DEPRESSION
FOR USE AS UNDERDRAIN CONNECTIONS.
USE 120 DIAMETER FOR 100 P.U.
180 DIAMETER FOR 150 P.U.
220 DIAMETER FOR 200 P.U
REFER TO PLANS FOR SIZE & LOCATION OF PIPE UNDERDRAINS.

PIPE UNDERDRAIN CONNECTION DETAIL

REVISIONS	
NAME	DATE

ILLINOIS DEPARTMENT OF TRANSPORTATION
F.A.I. ROUTE 80/94 (KINGERY EXPRESSWAY)

DRAINAGE STRUCTURES
CATCH BASINS 2.4mx0.9m & 2.4mx1.5m
FOR DEPTHS WHERE H >2.4m
SHEET 2 OF 2

SCALE NONE — DRAWN BY ACE/CAD
DATE 03/03 — CHECKED BY

CS-10B (METRIC)
REVISION DATE:

G:\Project\CO14060\PRC\Detail8\CS_10b.dgn Wed Mar 19 11:42:25 2003