F.A.I. RTE.	SECTION	COUNTY	TOTAL SHEETS	SHEET NO.
80/94	*	COOK	631	14
STA.		TO STA.		
FED. ROAD DIST. NO.		ILLINOIS	FED. AID PROJECT	

* (2425 & 2626) R-2 CONTRACT NO. 62111

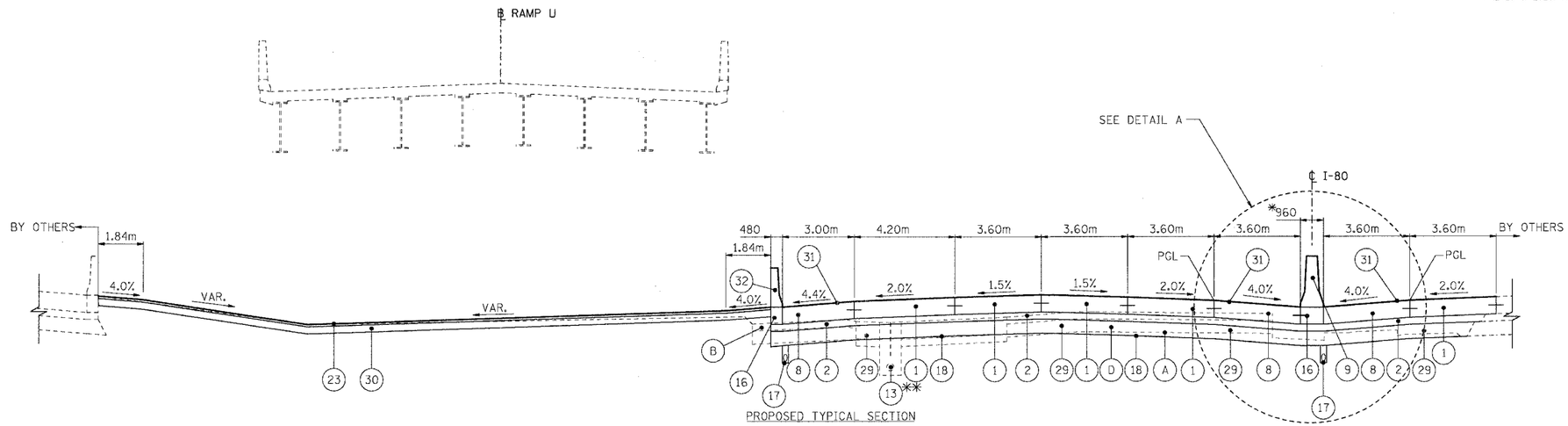

PROPOSED TYPICAL SECTION

I-80 WB/EB STA. 5+001.808 TO STA. 5+299.708

** STA. 4+970.062 TO STA. 5+137.875 & STA. 5+166.329 TO STA. 5+369.953

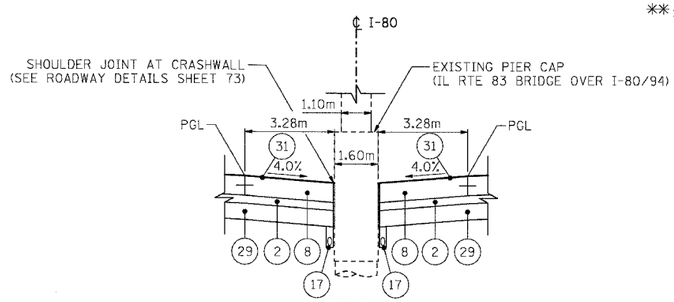

DETAIL A

STA. 5+127.133 TO STA. 5+174.383

* WIDTH VARIES 960mm TO 1.60 m
STA. 5+111.330 TO STA. 5+127.133

WIDTH VARIES 1.60m TO 960mm
STA. 5+174.383 TO STA. 5+180.783

SEE SHEETS 41 AND 42
FOR DETAILS

EXISTING LEGEND

- (A) PAVEMENT REMOVAL/BREAKING
- (B) PAVED SHOULDER REMOVAL
- (C) CONCRETE BARRIER REMOVAL
- (D) EXISTING PAVEMENT (SEE NOTES FOR THICKNESS)
- (E) EXISTING SHOULDER
- (F) EXISTING CONCRETE BARRIER
- (G) EXISTING GUARD RAIL
- (H) CURB AND GUTTER REMOVAL
- (I) EXISTING SIDEWALK
- (J) SIDEWALK REMOVAL
- (K) REM AND DISP UNS MATL 300

PROPOSED LEGEND

STRUCTURAL

□□ ITEM TO BE CONSTRUCTED TO EXTENDED LIFE CONCRETE PAVEMENT SPECIFICATIONS

1. CONTINUOUSLY REINFORCED PORTLAND CEMENT CONCRETE PAVEMENT 360mm □□
2. STABILIZED SUB-BASE 150mm □□
3. TOPSOIL FURNISH AND PLACE, 150mm
4. SEEDING, CLASS 2A
5. CONCRETE MEDIAN SURFACE, 150mm (SPECIAL)
6. SAND BACKFILL
7. EMBANKMENT □□
8. PCC SHOULDERS, 360mm □□
9. CONCRETE BARRIER, DOUBLE FACE, 1065mm HEIGHT
10. CONCRETE BARRIER, SINGLE FACE, 815mm HEIGHT
11. CONCRETE BARRIER, DOUBLE FACE 815mm HEIGHT
12. PCC SIDEWALK, 125mm
13. SLOTTED DRAIN REMOVAL
14. COMB CC&G TB 15.60
15. COMB CC&G TB 15.30
16. CONCRETE BARRIER BASE
17. PIPE UNDERDRAINS 150mm
18. GEOTECHNICAL FABRIC FOR GROUND STABILIZATION
19. TEMPORARY SHEET PILING REMOVAL
20. PCC PVT 250 JOINTED
21. BIT C PVT FD SUP 230
22. BIT C PVT FD SUP 300
23. BC SC SUPER "C" N50 50
24. AGGREGATE SUBGRADE 300mm
25. SODDING, SALT TOLERANT
26. TOPSOIL FURNISH AND PLACE, 300mm
27. COMPOST FURNISH AND PLACE, 100mm
28. EROSION CONTROL BLANKET
29. SUB-BASE GRANULAR MATERIAL, TYPE B, 300mm □□
30. AGGREGATE BASE COURSE, TYPE B, 150mm
31. SHOULDER RUMBLE STRIP
32. CONCRETE BARRIER SINGLE FACE 815 MM HEIGHT, REINFORCED
33. SUB GRAN MAT B 100
34. BIT SHLD SUPER 150

NOTES

1. ALL UNITS ARE IN MILLIMETERS UNLESS OTHERWISE NOTED.
2. SUB-BASE GRANULAR MATERIAL, TYPE B, 300mm SHALL CONSIST OF 225mm OF GRANULAR SUB-BASE WITH A 75mm GRANULAR SUB-BASE CAP.
3. CRC REINFORCEMENT CHART ON STANDARD 421001 SHALL BE MODIFIED AS FOLLOWS:

PAVEMENT WIDTH	A	B	C	D
3.6M	26 SPACES (27 BARS) AT 132mm	90mm	75mm	660mm
4.2M	31 SPACES (32 BARS) AT 130mm	90mm	75mm	660mm
4.9M	35 SPACES (36 BARS) AT 135mm	95mm	85mm	660mm

THE REINFORCEMENT SHALL BE 115mm FROM THE TOP OF PAVEMENT

4. TIE BARS IN PAVEMENT OR BETWEEN PAVEMENT AND OTHER NEW/OR EXISTING PCC APPURTENANCES WILL NOT BE PAID FOR IN ACCORDANCE WITH ARTICLE 508.07 OF THE STANDARD SPECIFICATIONS.
5. FOR LONGITUDINAL JOINT DETAILS SEE PAVEMENT ELEVATION AND JOINTING PLANS AND CONCRETE BARRIER DETAILS SHEET.
6. EARTHWORK CALCULATED USING EXISTING I-80/94 PAVEMENT SECTION OF 150mm BITUMINOUS OVERLAY AND 275mm PCC BASE COURSE

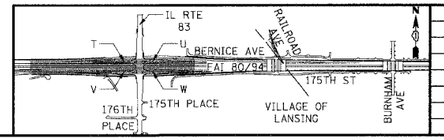

REVISIONS	
NAME	DATE

ILLINOIS DEPARTMENT OF TRANSPORTATION
F.A.I. ROUTE 80/94 (KINGERY EXPRESSWAY)
EB & WB INSIDE LANES (MAINLINE) CONSTRUCTION
COOK COUNTY

TYPICAL SECTIONS
FAI 80/94
STA. 5+002 TO STA. 5+300

SCALE: NONE
DATE: 8/22/05
DRAWN BY: RJS
CHECKED BY: DH

TENG & ASSOCIATES, INC.
ENGINEERS/ARCHITECTS/PLANNERS
CHICAGO, ILLINOIS

..\M99900I2A.DGN..\P99900I2A.DGN..\TS1R01I2A.DGN..\TS1R01I2A.DGN..\TS1A60I2A.DGN..\VRH10032A.DGN..\TS3X037A.DGN..\PRJA0092A.DGN..\TS1T0012A.DGN..\VRH10032A.DGN..\TS1T0052A.DGN
8-9-2005,15:07:35 I:\DOCUMENT\95175D\CIVIL\DGN\TS1T0052A.DGN BAJZEKKJ
1 2 3 4 5 6 7 8 9 10 11 12 13 14 15 16 17 18 19 20 21 22 23 24 25 26 27 28 29 30 31 32 33 34 35 36 37 38 39 40 41 42 43 44 45 46 47 48 49 50 51 52 53 54 55 56 57 58 59 60 61 62