F.A.I. RTE.	SECTION	COUNTY	TOTAL SHEETS	SHEET NO.
80/94	*	COOK	631	422
STA.		TO STA.		
FED. ROAD DIST. NO.		ILLINOIS	FED. AID PROJECT	

* (2425 & 2626) R-2 CONTRACT NO. 62111

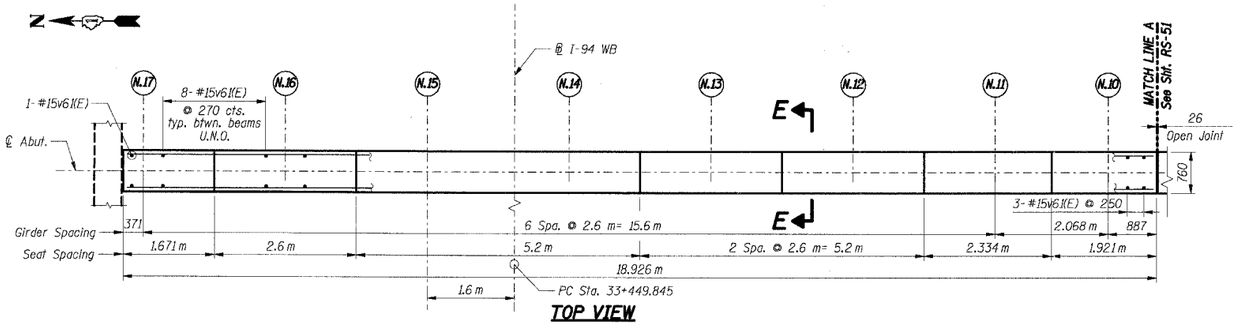

TOP VIEW

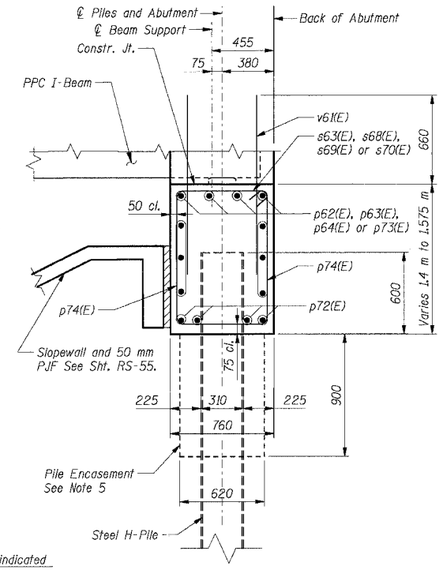

SECTION E-E

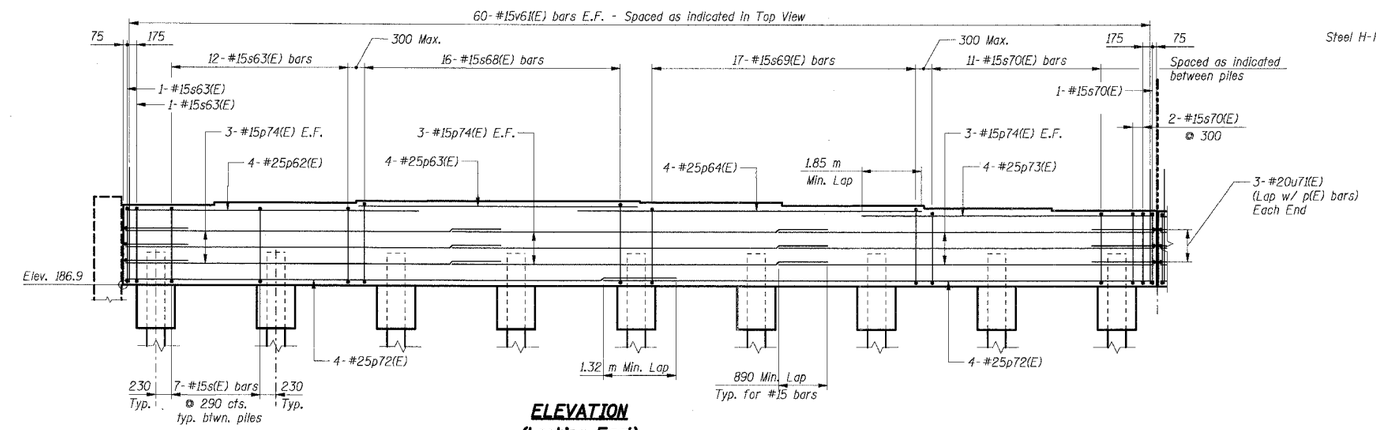

ELEVATION
(Looking East)

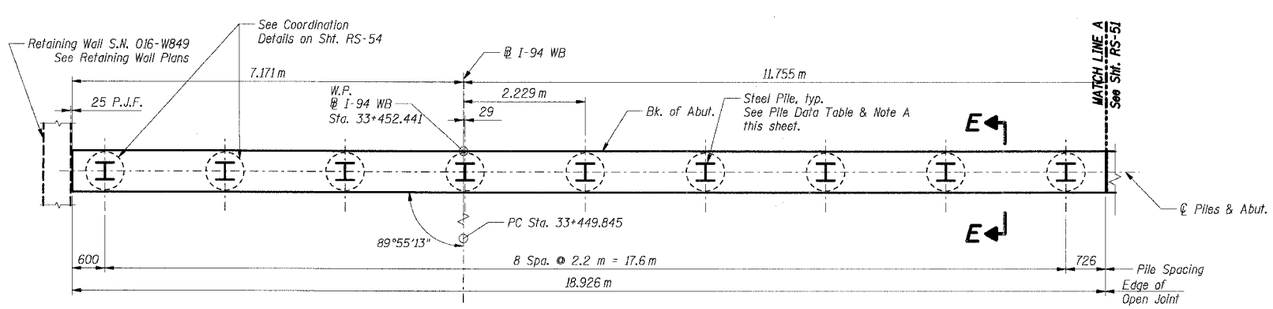

FOOTING PLAN

BAR LIST

Bar	No.	Size	Length (m)	Shape
p62(E)	4	#25	6.13	
p63(E)	4	#25	5.10	
p64(E)	4	#25	7.05	
p72(E)	8	#25	10.06	
p73(E)	4	#25	6.11	
p74(E)	18	#15	6.87	
s63(E)	14	#15	4.30	
s68(E)	16	#15	4.48	
s69(E)	17	#15	4.32	
s70(E)	13	#15	4.14	
u71(E)	5	#20	2.85	
v61(E)	120	#15	1.32	

BILL OF MATERIAL

Item	Unit	Total
Concrete Structures	Cu m	21.7
Reinforcement Bars, Epoxy Coated	kg	1,590
Structure Excavation	Cu m	0

BEARING SEAT ELEVATIONS

Girder	East Abutment	Steps
N.17	188.385	50
N.16	188.435	40
N.15	188.475	0
N.14	188.475	30
N.13	188.445	55
N.12	188.390	50
N.11	188.340	40
N.10	188.300	

Bar	A (m)
s63(E)	1.35
s68(E)	1.44
s69(E)	1.36
s70(E)	1.27

PILE DATA
(See Note A below)

Type: HP 310x79
Design Capacity: 600 kN
Required Bearing: 900 kN
Est. Length: 27 m
No. Required: 9

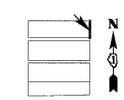

KEY PLAN

Notes:

1. All dimensions are in millimeters (mm) except as noted.
2. Reinforcement bars designated (E) shall be epoxy coated.
3. E.F. indicates each face.
4. Work this sheet with sheet RS-51.
5. For Pile Encasement details, see sheet RS-3.

NOTE A:
Pile driving shall not begin until full embankment has been in place for at least 60 days

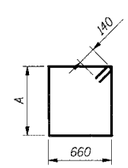

bars s63(E), s68(E), s69(E) and s70(E)

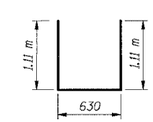

bar u71(E)

THIS SHEET FOR INFORMATION ONLY

SHT. RS-50 OF 70

REVISIONS	
NAME	DATE

ILLINOIS DEPARTMENT OF TRANSPORTATION
F.A.I. ROUTE 80/94 (KINGERY EXPRESSWAY)
EB & WB INSIDE LANES (MAINLINE) CONSTRUCTION
I-80/94 OVER RAILROAD AVENUE
STRUCTURE NO. 016-2792 STA. 6+025.000
SECTION 1977-121-R
COOK COUNTY

EAST ABUTMENT
PLAN, ELEVATION & SECTION - I

DATE: 7/18/2005
DRAWN BY: LS
CHECKED BY: TCU

TENG
TENG & ASSOCIATES, INC.
ENGINEERS/ARCHITECTS/PLANNERS
CHICAGO, ILLINOIS

..\A899G02A.DGN, ..\A899M02A.DGN, ..\A899M02A.DGN, ..\W899G22A.DGN, ..\A899G10A.DGN, ..\SL99R02A.DGN
7-12-2005, 10:25:58 T:\DOCUMENT\839750\STRUCT\DGN\ABT3172A.DGN
BAJZEKKJ