F.A.I. RTE.	SECTION	COUNTY	TOTAL SHEETS	SHEET NO.
80/94	*	COOK	631	425
STA.		TO STA.		
FED. ROAD DIST. NO.		ILLINOIS	FED. AID PROJECT	

* (2425 & 2626) R-2 CONTRACT NO. 62111

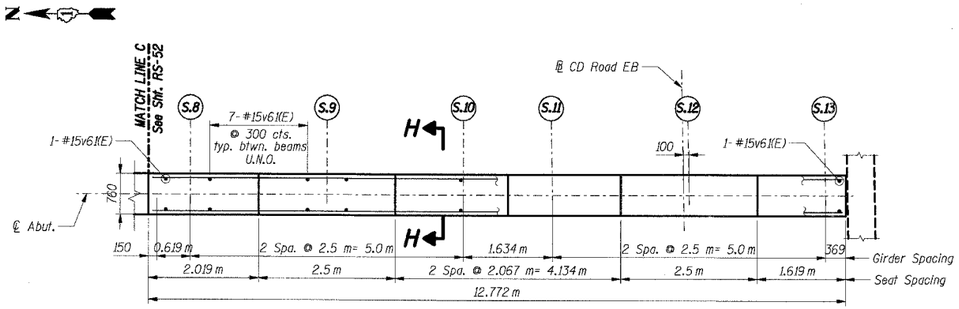

TOP VIEW

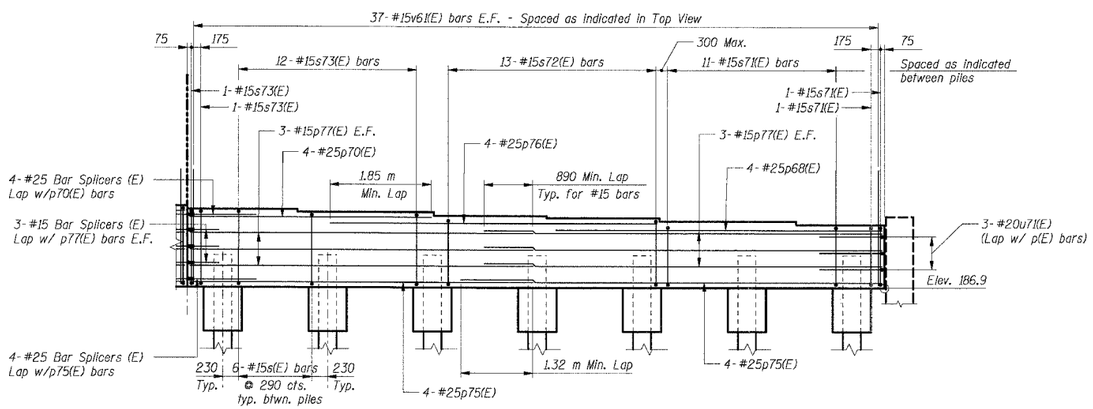

ELEVATION (Looking East)

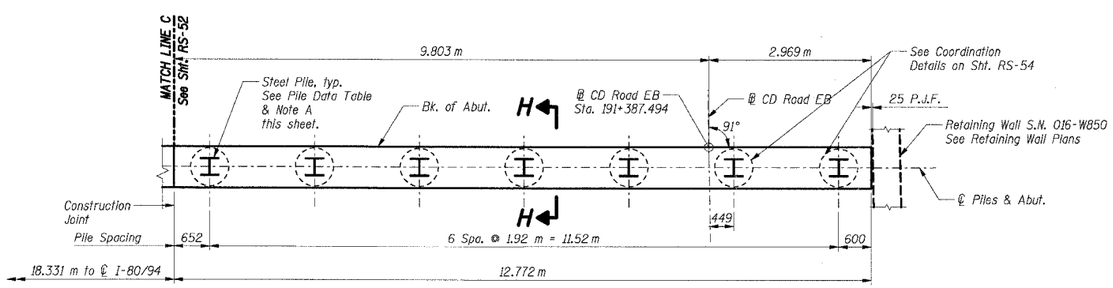

FOOTING PLAN

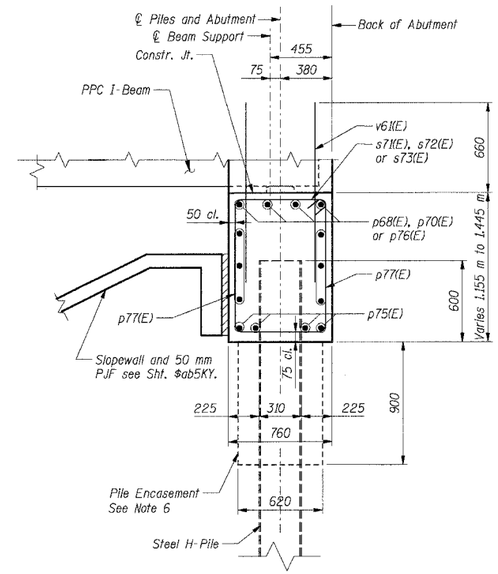

SECTION H-H

BAR LIST

Bar	No.	Size	Length (m)	Shape
p68(E)	4	#25	5.97	
p70(E)	4	#25	4.45	
p75(E)	8	#25	6.95	
p76(E)	4	#25	5.99	
p77(E)	12	#15	7.30	
s71(E)	13	#15	3.64	
s72(E)	13	#15	3.90	
s73(E)	14	#15	4.10	
u71(E)	3	#20	2.85	
v61(E)	14	#15	1.32	

BILL OF MATERIAL

Item	Unit	Total
Concrete Structures	Cu m	11.3
Reinforcement Bars, Epoxy Coated	kg	1,030
Structure Excavation	Cu m	0
Bar Splicers	Ea.	14

BEARING SEAT ELEVATIONS

Girder	East Abutment	Steps
S.8	188.345	60
S.9	188.285	65
S.10	188.220	40
S.11	188.180	60
S.12	188.120	65
S.13	188.055	

PILE DATA

(See Note A below)

Type: HP 310x79
Design Capacity: 600 kN
Required Bearing: 900 kN
Est. Length: 27 m
No. Required: 7

KEY PLAN

Bar	A (m)
s71(E)	1.02
s72(E)	1.15
s73(E)	1.25

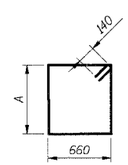

bars s71(E) thru bar s73(E)

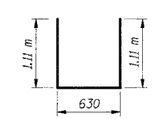

bar u71(E)

Notes:

1. All dimensions are in millimeters (mm) except as noted.
2. Reinforcement bars designated (E) shall be epoxy coated.
3. E.F. indicates each face.
4. Work this sheet with sheet RS-52.
5. For Bar Splicer details, see sheet RS-66.
6. For Pile Encasement details, see sheet RS-3.

NOTE A:
Pile driving shall not begin until full embankment with 1.5 meter surcharge has been in place for at least 30 days

THIS SHEET FOR INFORMATION ONLY

SHT. RS-53 OF 70

REVISIONS	
NAME	DATE

ILLINOIS DEPARTMENT OF TRANSPORTATION
F.A.I. ROUTE 80/94 (KINGERY EXPRESSWAY)
EB & WB INSIDE LANES (MAINLINE) CONSTRUCTION
I-80/94 OVER RAILROAD AVENUE
STRUCTURE NO. 016-2792 STA. 6+025.000
SECTION 1977-121-R
COOK COUNTY

EAST ABUTMENT PLAN, ELEVATION & SECTION - IV

DATE: 7/18/2005
DRAWN BY: LS
CHECKED BY: TCU

TENG
TENG & ASSOCIATES, INC.
ENGINEERS/ARCHITECTS/PLANNERS
CHICAGO, ILLINOIS

BAUZEKKJ
..\AB98R032A.DGN, ..\AB99R472A.DGN, ..\AB99R022A.DGN, ..\AB99R012A.DGN, ..\SL99R042A.DGN, ..\AB99M472A.DGN
7-12-2005, 10:26:00 T:\DOCUMENT\99\750\STRUCT\DGN\AB173232A.DGN