F.A.I. RTE.	SECTION	COUNTY	TOTAL SHEETS	SHEET NO.
80/94	*	COOK	631	487
STA.		TO STA.		
FED. ROAD DIST. NO.		ILLINOIS	FED. AID PROJECT	

* (2425 & 2626) R-2 CONTRACT NO. 62111

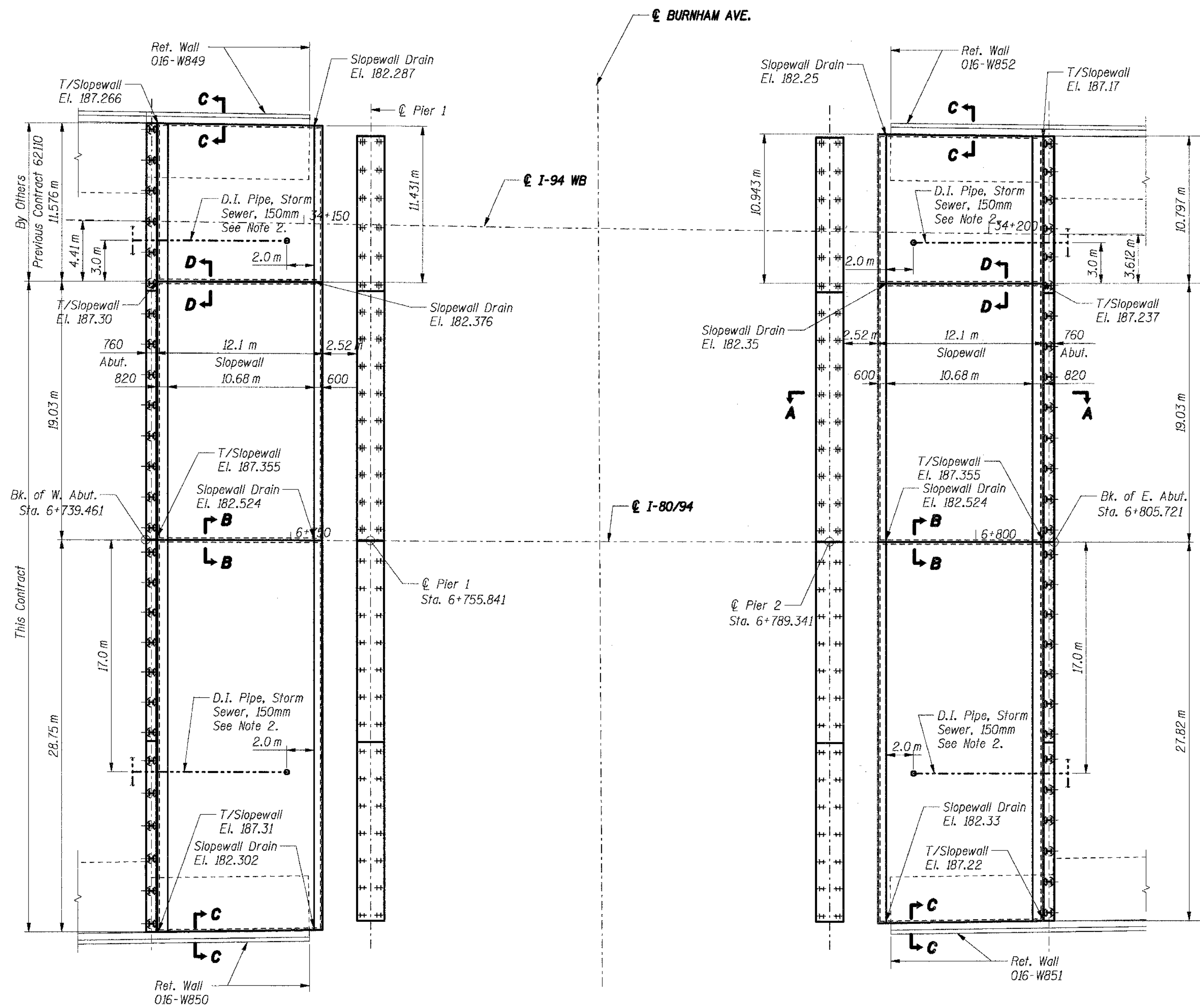

SLOPE WALL PLAN

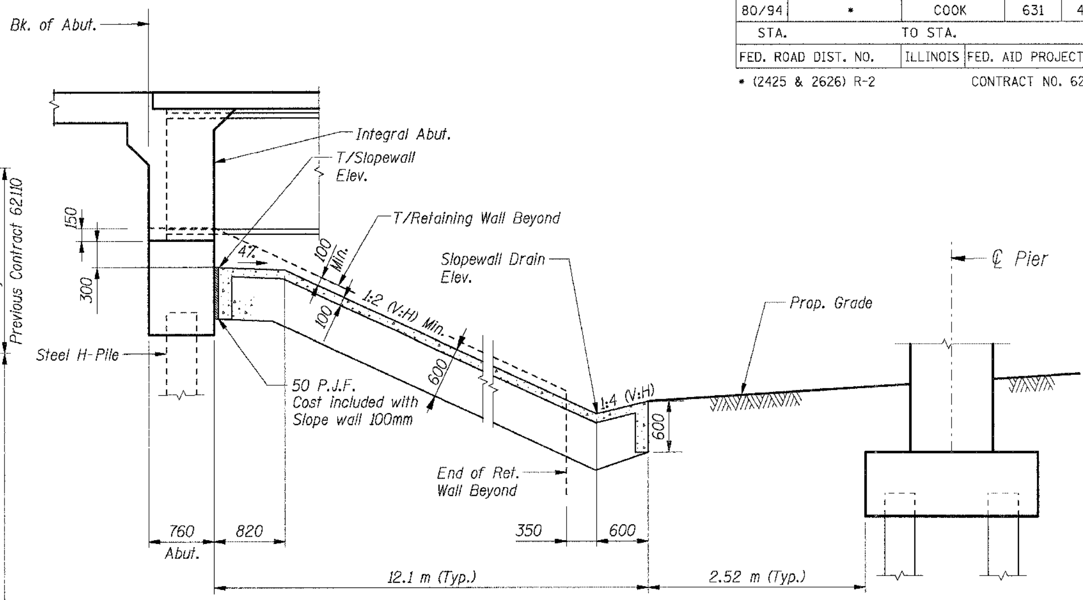

TYPICAL SECTION A-A

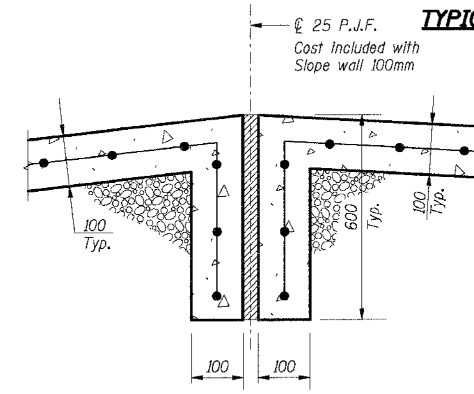

SECTION B-B

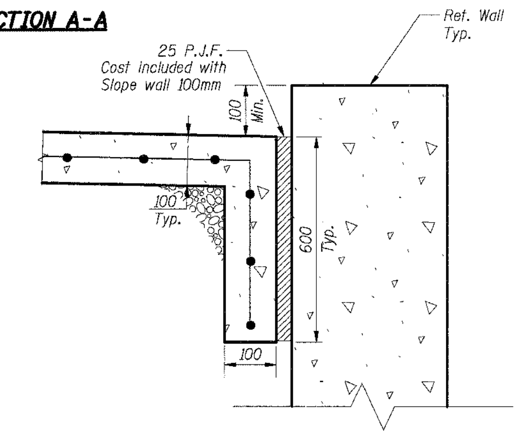

SECTION C-C

BILL OF MATERIAL

Item	Unit	Total
Slope Wall 100mm	Sq m	1,264

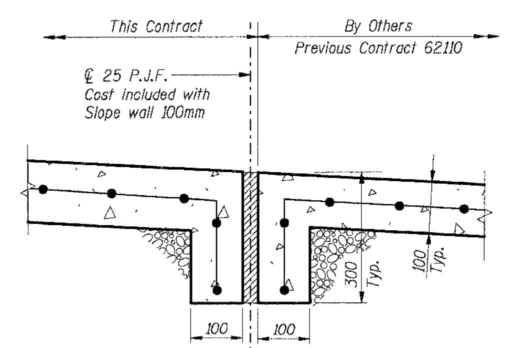

SECTION D-D

Notes:

1. All dimensions are in millimeters (mm) except as noted.
2. See Sht. BS-3 for invert elevations and connecting pipe underdrain. See Roadway Plans for pay items and quantities.
3. Protect slope wall constructed in Previous Contract 62110. Damage to slope caused by operations during this contract shall be repaired as directed by Engineer. Repairs to the existing slopewall shall not be measured for payment and shall be included with Slope Wall 100 mm.

SHT. BS-45 OF 60

REVISIONS	
NAME	DATE

ILLINOIS DEPARTMENT OF TRANSPORTATION
F.A.I. ROUTE 80/94 (KINGERY EXPRESSWAY)
EB & WB INSIDE LANES (MAINLINE) CONSTRUCTION
I-80/94 OVER BURNHAM AVENUE
STRUCTURE NO. 016-2791 STA. 6+772.591
SECTION 1977-121-R
COOK COUNTY

SLOPEWALL DETAILS

DATE: 7/18/2005

DRAWN BY: LG
CHECKED BY: MJK

TENG
TENG & ASSOCIATES, INC.
ENGINEERS/ARCHITECTS/PLANNERS
CHICAGO, ILLINOIS

..\SL99R032A.DGN, ..\HR99R012A.DGN, ..\HR99R022A.DGN, ..\AB990012A.DGN, ..\PR99001 2A.DGN, ..\RS170742A.DGN, ..\RS99R012A.DGN, ..\RS99R912A.DGN, ..\RS17R112A.DGN, ..\RS13R212A.DGN, ..\AB136232A.DGN
7-12-2005, 10:26:56 T:\DOCUMENT\931750I\STRUCT\DGN\AB176272A.DGN BAJZEKKJ