CONTRACT NO. 64517

F.A.P. RTE.	SECTION	COUNTY	TOTAL SHEETS	SHEET NO.
573	J168-4	DEKALB	416	275
STA. _____		TO STA. _____		
FED. ROAD DIST. NO. _	ILLINOIS	FED. AID PROJECT		

CONCRETE COLLARS FOR PIPE OR BOX CULVERT EXTENSIONS

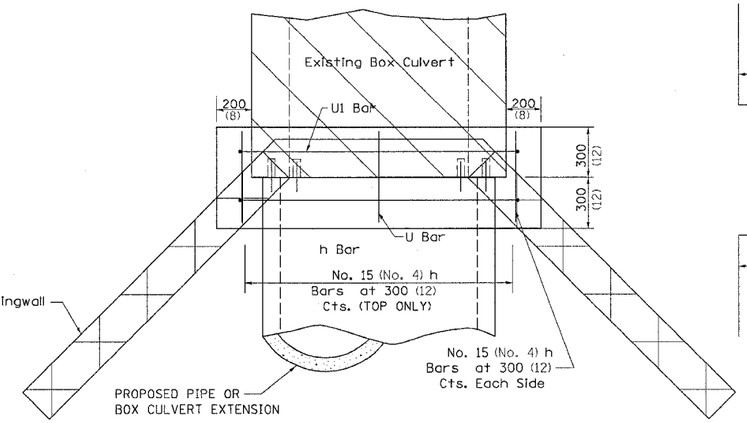

PLAN OF CULVERT WITH ANGLED WING WALLS

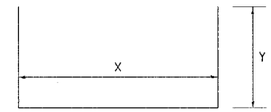

(#4) U BAR

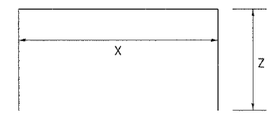

(#4) U1 BAR

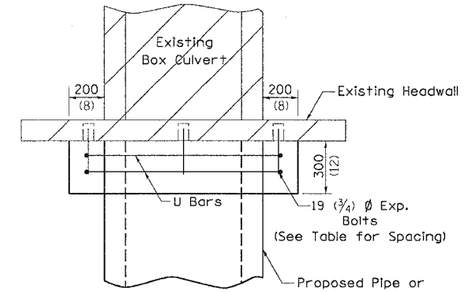

PLAN OF CULVERT WITH STRAIGHT HEADWALL

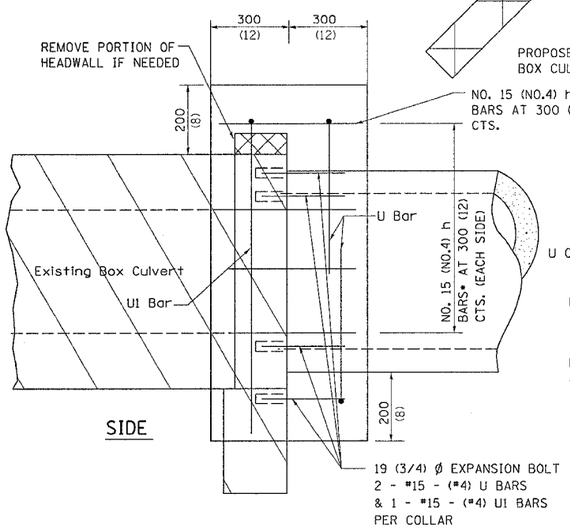

SIDE

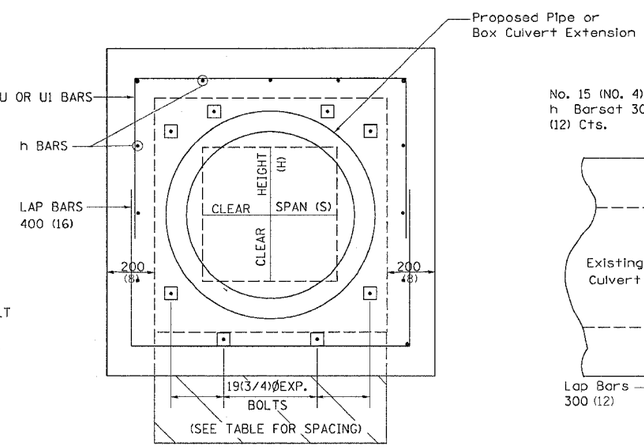

FRONT

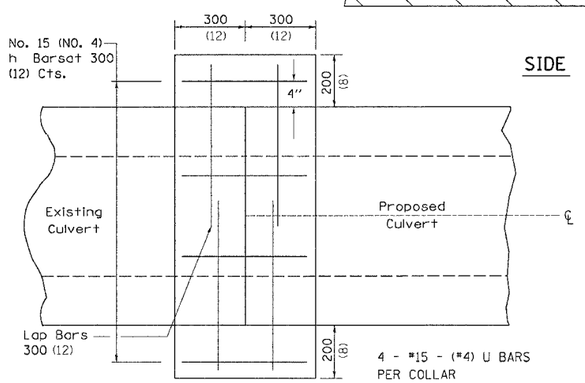

CULVERT CONNECTION WITHOUT EXISTING HEADWALL

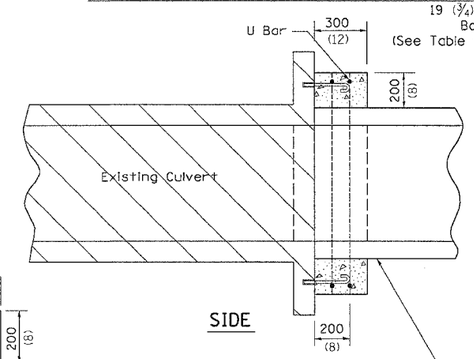

SIDE

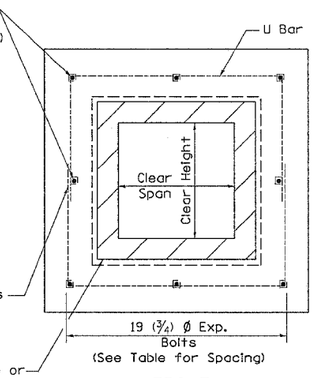

FRONT

PLACEMENT DETAILS FOR EXPANSION BOLTS

H OR S	NUMBER OF EXPANSION BOLTS REQUIRED PER SIDE			
	EXTENSIONS < 4.57m (15')		EXTENSIONS > 4.57m (15')	
	NUMBER	SPACING	NUMBER	SPACING
600 (24)	*		*	
750 (30)	2	450 (18)	2	450 (18)
900 (36)	2	600 (24)	2	600 (24)
1200 (48)	3	450 (18)	3	450 (18)
1500 (60)	4	400 (16)	3	600 (24)
1800 (72)	5	375 (15)	4	500 (20)
2100 (84)	5	450 (18)	4	600 (24)
2400 (96)	6	375 (15)	5	525 (21)
2700 (108)	6	475 (19)	5	600 (24)
3000 (120)	7	450 (18)	6	525 (21)
3300 (132)	8	425 (17)	6	600 (24)
3600 (144)	8	475 (19)	7	550 (22)

* MINIMUM ONE PER SIDE

Bill of Materials

STATION	DIMENSIONS X	DIMENSIONS Y	h Bar No.	U Bar No.	U Bar Length	EXPANSION BOLTS No.	CONCRETE COLLAR Cu. Yd.	REINF. BARS Pound
178+24.64			10	4	5.5		0.49	24.7
All h Bars 450 (18) Long					Total		0.49	24.7

General Notes

Concrete Collars shall be constructed of Class SI Concrete in accordance with Section 503 of the Standard Specifications

Reinforcement bars shall conform to Section 508 of the Standard Specifications.

The concrete will be paid for at the contract unit price per cubic meter (cubic yard) for CONCRETE COLLAR. Reinforcement will be paid for at the contract unit price per kilogram (pound) for REINFORCEMENT BARS. Expansion Bolts, when required, will be paid for at the contract unit price each for EXPANSION BOLTS of the size indicated, which price shall include furnishing, drilling holes, and installing the expansion bolts complete in place. These bolts shall extend at least 200 (8 inches) into the new concrete.

PLOT DATE = Wed Sep 14 14:20:03 2005
FILE NAME = C:\projects\b2817000\d81708mp1.dgn
PLOT SCALE = 50.0000 ' / IN.
REFERENCE = $$REF$$