CONTRACT NO. 76960

FAU RTE.	SECTION	COUNTY	TOTAL SHEETS	SHEET NO.
9128	28-RS-1	MADISON	14	4
STA.		TO STA.		
FED. ROAD DIST. NO.	ILLINOIS	FED. AID PROJECT		

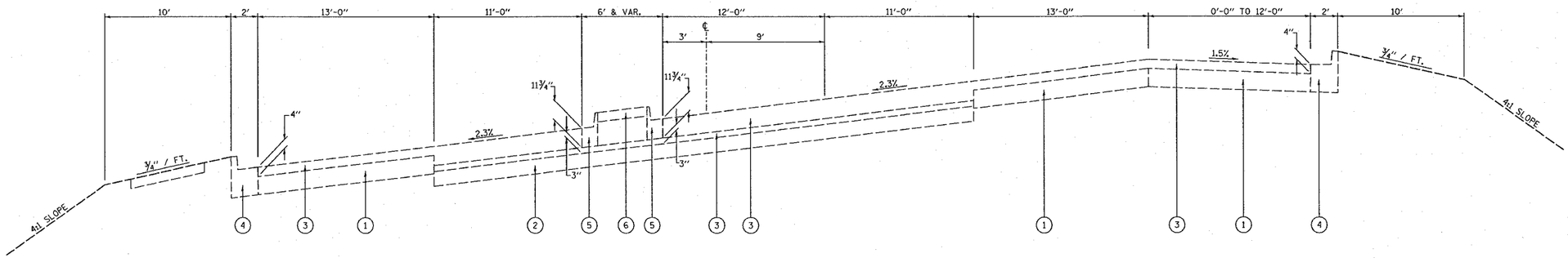

EXISTING SUPERELEVATION TYPICAL SECTION
289+94.21 TO 291+98.18

LEFT TURN LANE
289+48 TO 291+63 E.B.
292+60 TO 296+24 W.B.

RIGHT TURN LANE
288+48 TO 290+67 E.B.
293+64 TO 297+42 W.B.

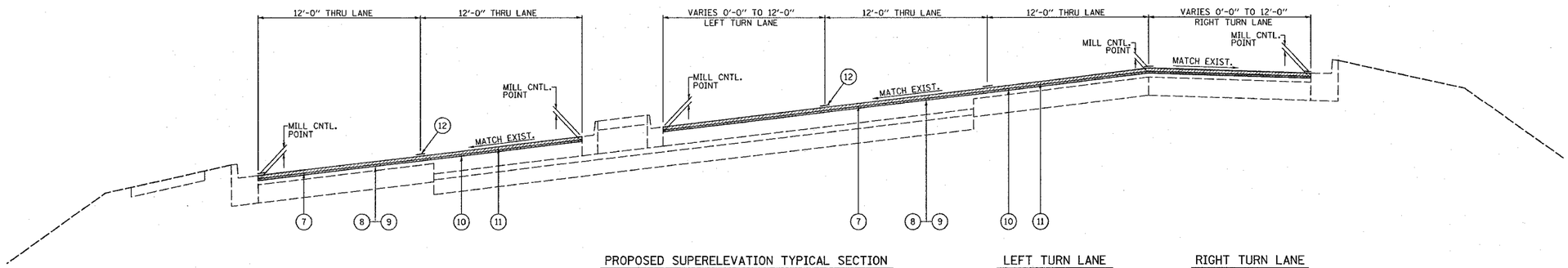

PROPOSED SUPERELEVATION TYPICAL SECTION
289+94.21 TO 291+98.18

LEFT TURN LANE
289+48 TO 291+63 E.B.
292+60 TO 296+24 W.B.

RIGHT TURN LANE
288+48 TO 290+67 E.B.
293+64 TO 297+42 W.B.

LEGEND

1. EXISTING P.C.C. PAVEMENT - 8"
2. EXISTING P.C.C. PAVEMENT - 9"
3. EXISTING BITUMINOUS OVERLAY - VARIES 3" TO 11 3/4"
4. EXISTING CONCRETE COMBINATION C&G T-B 6.24
5. EXISTING CONCRETE COMBINATION C&G T-M 6.06
6. EXISTING P.C.C. MEDIAN SURFACE - 4"
7. PROPOSED BITUMINOUS SURFACE REMOVAL - 2 1/4"
8. PROPOSED BITUMINOUS MATERIAL (PRIME COAT)
9. PROPOSED AGGREGATE (PRIME COAT)
10. PROPOSED LEVELING BINDER (MIN.) -3/4"
11. PROPOSED SURFACE COURSE - 1 1/2"
12. PROPOSED THERMOPLASTIC PAVEMENT MARKING

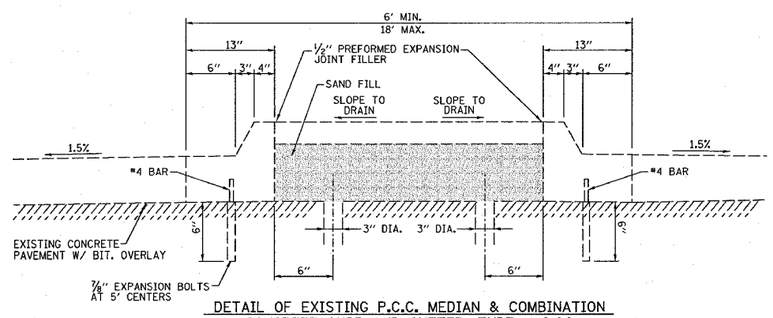

DETAIL OF EXISTING P.C.C. MEDIAN & COMBINATION CONCRETE CURB AND GUTTER, TYPE M-6.06 (MODIFIED)

REVISIONS	
NAME	DATE

ILLINOIS DEPARTMENT OF TRANSPORTATION

TYPICAL SECTIONS

FAU ROUTE 9128
SECTION 28-RS-1
MADISON COUNTY

SCALE: VERT. HORIZ.
DATE
DRAWN BY
CHECKED BY

PLOT DATE = 6/30/2005
FILE NAME = e:\proj\pcs\ed0105\plan\pln0105a.dgn
PLOT SCALE = 50.0000 ' / IN.
REFERENCE = REF