SECTION	COUNTY	TOTAL SHEETS	SHEET NO.
02-00090-00-BT	DUPAGE	117	7
STA.	TO STA.		
IDOT PROJECT NO. M-8003(222)			
SALT CREEK GREENWAY TRAIL			

CONTRACT NO. 83713

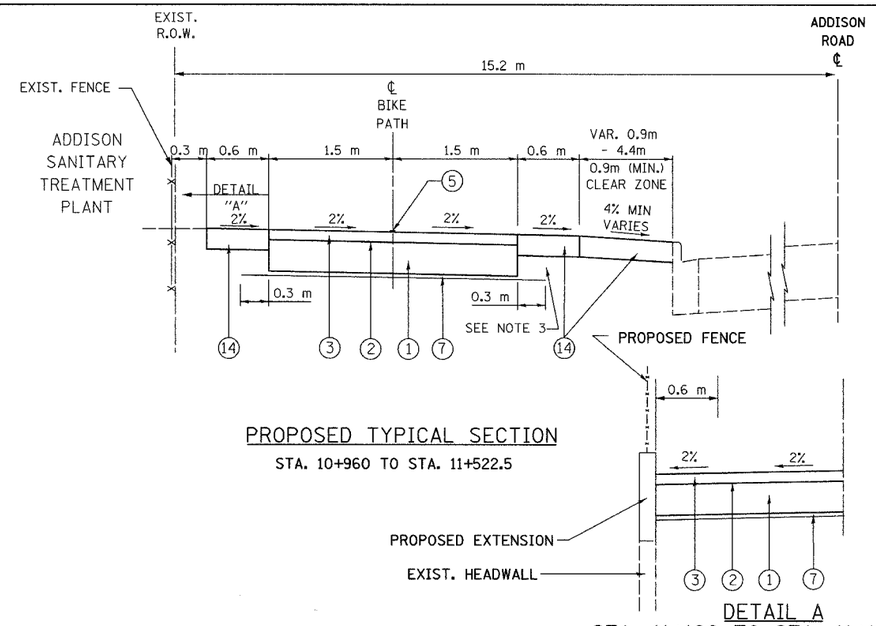

PROPOSED TYPICAL SECTION

STA. 10+960 TO STA. 11+522.5

DETAIL A

STA. 11+120 TO STA. 11+130 (LT)

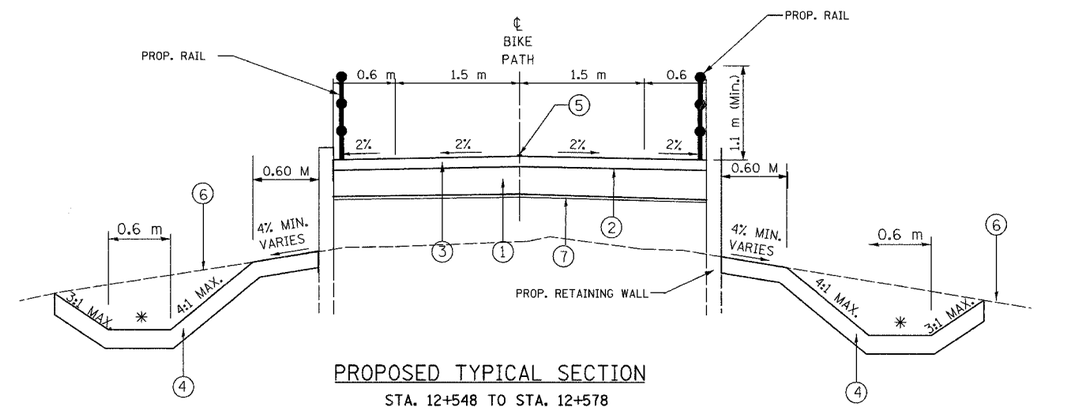

PROPOSED TYPICAL SECTION

STA. 12+548 TO STA. 12+578

STA. 12+523 TO STA. 12+548 (BRIDGE)

✳ FOR SPECIAL DITCH DETAILS SEE CROSS SECTIONS

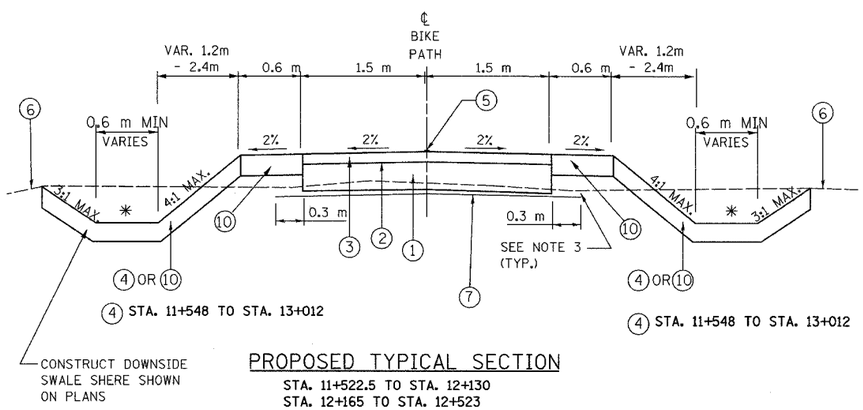

PROPOSED TYPICAL SECTION

STA. 11+522.5 TO STA. 12+130

STA. 12+165 TO STA. 12+523

STA. 13+578 TO STA. 13+012

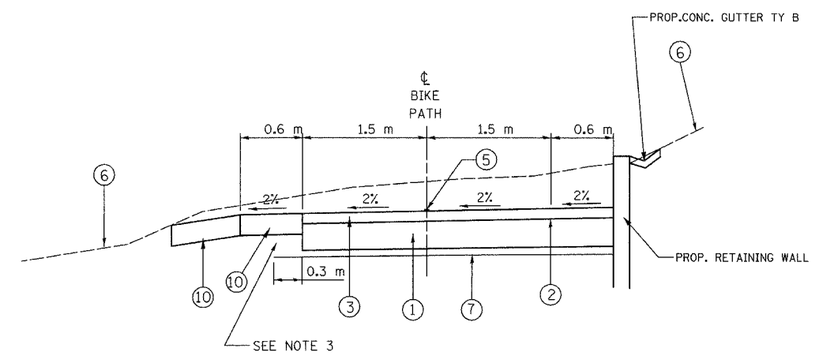

PROPOSED TYPICAL SECTION

STA. 12+130 TO STA. 12+165

ITEM	AC TYPE	VOIDS	RAP %	USAGE
BITUMINOUS CONCRETE SURFACE COURSE, SUPERPAVE, MIX. C, N50	PG 64-22	4% @ 50 GYR	15%	BIKE PATH SURFACE

DESIGNER USED UNIT WEIGHT 112 LBS/SQ YD/IN (2.39 KG/SM/MM) FOR CALCULATION PURPOSES

LEGEND:

1. AGGREGATE BASE COURSE, TYPE B, 150 mm
2. BITUMINOUS PRIME COAT
3. BITUMINOUS CONCRETE SURFACE COURSE, SUPERPAVE MIX "C", N50, 50 mm
4. 150 mm TOP SOIL AND SEEDING CLASS 4A
5. PAINT PAVEMENT MARKING, 100 mm YELLOW
6. EXISTING GROUND
7. GEOTECHNICAL FABRIC FOR GROUND STABILIZATION
8. PRECAST BLOCK RETAINING WALL
9. EXISTING SIDEWALK TO BE REMOVED
10. 150 mm TOP SOIL AND SEEDING, CLASS 1 B
11. EARTH EXCAVATION
12. SUITABLE EMBANKMENT MATERIAL (NO TOPSOIL)
13. LIMESTONE SCREENINGS 50 mm
14. 150 mm TOP SOIL AND SALT TOLERANT SODDING
18. PCC SIDEWALK PAVEMENT 150 mm
19. AGGREGATE BASE COURSE, TYPE B, 100 mm

REVISIONS		
NO.	NAME	DATE

URS
1701 GOLF ROAD, SUITE 1000 TEL (847) 228-0707
ROLLING MEADOWS, IL 60008 FAX (847) 228-1115

VILLAGE OF ADDISON

SALT CREEK GREENWAY TRAIL

TYPICAL SECTIONS

DATE: 7/18/05 DRAWN BY:MIA&VP

DESIGNED BY: MIA CHECKED BY: DDL