ROUTE	SECTION	COUNTY	TOTAL SHEETS	SHEET NO.
TR 227	98-11120-00-BR	JEFFERSON	35	25
FED. ROAD DIST. NO. 7	ILLINOIS	FED. AID PROJECT		
		CONTRACT NO. 95437		

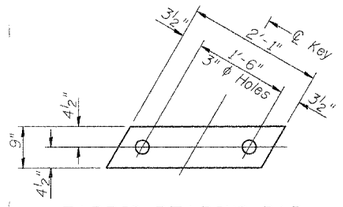

FABRIC BEARING PAD
(Interior)

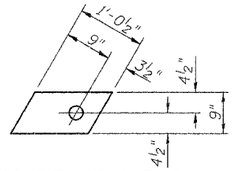

FABRIC BEARING PAD
(Exterior)

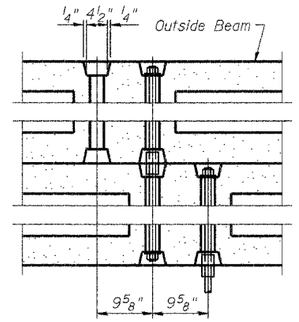

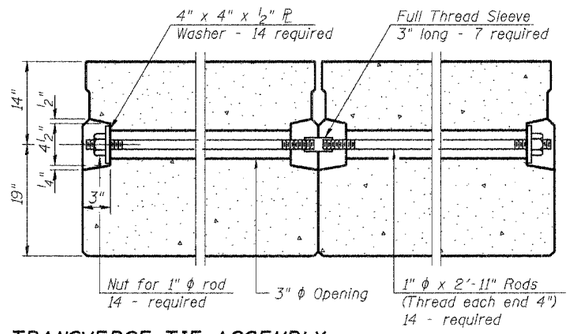

TYPICAL TRANSVERSE TIE ASSEMBLY

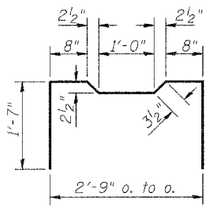

BAR A_1

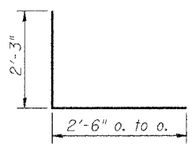

BAR D

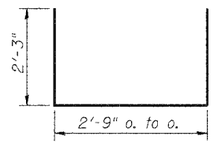

BARS U & U_1

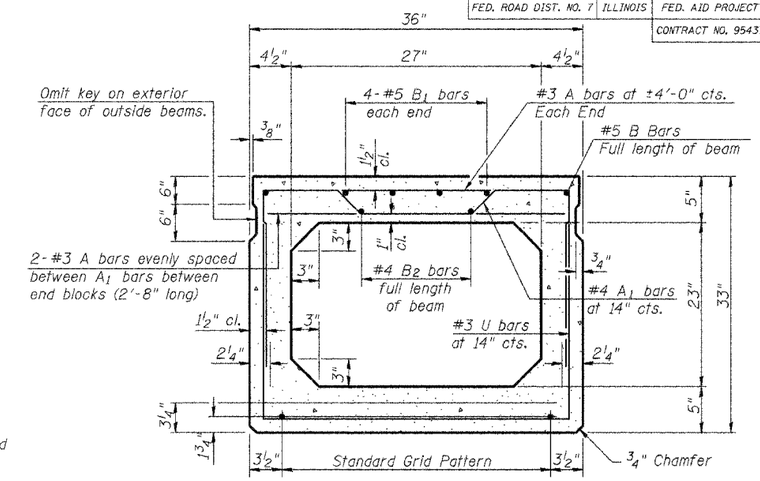

TYPICAL SECTION

15-1/2 " ϕ Strands, Each Strand Stressed to 28,900 Lbs.
7-Strands 1¾" up, 8-Strands 3¼" up

Note:
Place strands symmetrically about ℄ of beam.

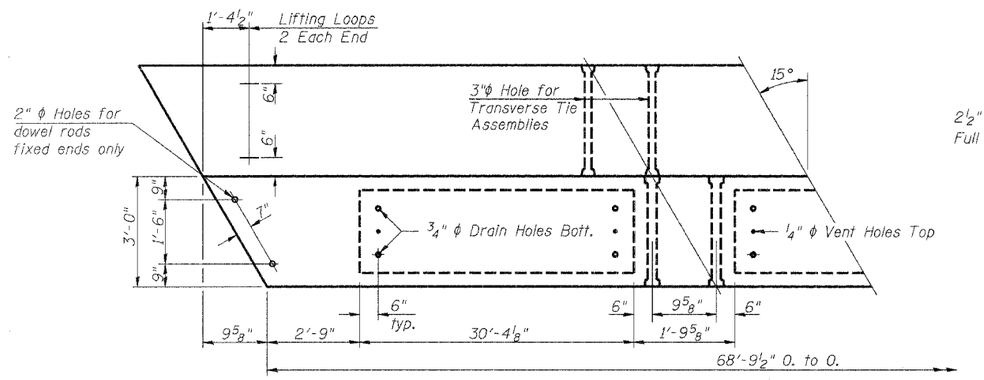

PLAN

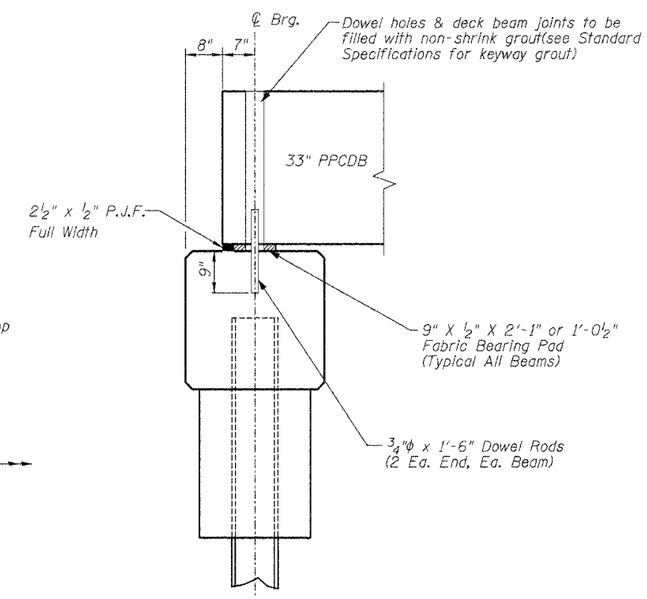

RESTRAINED BEARING ABUTMENT

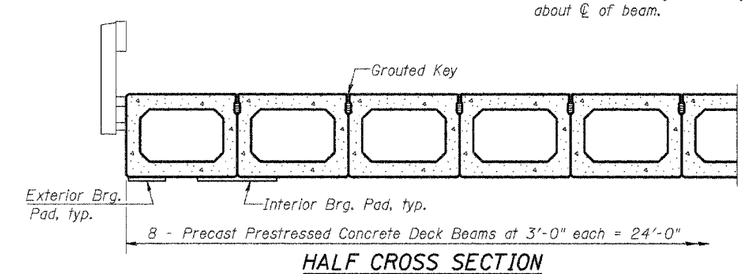

HALF CROSS SECTION

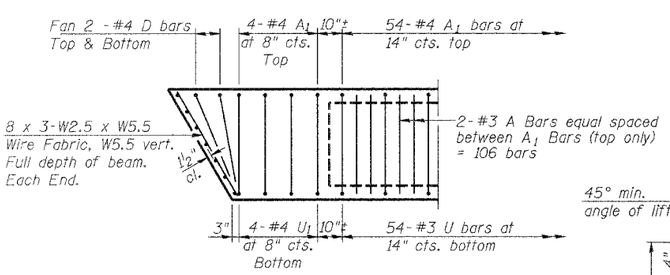

END PLAN

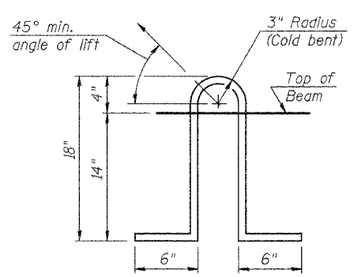

LIFTING LOOP DETAIL

NOTES

Prestressing steel shall be uncoated high strength, stress-relieved 7-wire strand, Grade 270.

The nominal diameter shall be ½" and the nominal cross-sectional area shall be 0.153 sq. in.

Lifting loops shall be 3 - ½"ϕ-270 ksi strands, as shown.

The 1"ϕ rods in the transverse tie assembly shall be tightened to a snug fit and the threads set. Pockets that receive transverse tie bar on outside shall be filled with grout after transverse tie assembly is in place.

Reinforcement bars shall conform to the requirements of AASHTO M-31, M-42 or M-53 Grade 60.

The bearing seat surfaces shall be adjusted by shimming to assure firm and even bearing. Two ⅛" fabric adjusting shims of the dimensions of the Exterior Bearing Pad shall be provided for each bearing.

Keyway surfaces shall be cleaned to remove form oil or other bond breaking material prior to shipment of the beams. Cleaning shall be done by sandblasting the keyway areas between top of the beam and the bottom edge of the key.

Required Release Strength, f'ci, shall be 4000 p.s.i. (minimum).

An equal substitiution of low-relaxation strands for the stressed-relieved strands will be permitted. However, the initial prestressing force shall be the same as for the stress-relieved strands. (28,900 lbs.)

BILL OF MATERIAL

Bar	No.	Size	Length	Shape
A	114	#3	2'-8"	——
A_1	62	#4	6'-1"	⊓
B	4	#5	35'-9"	——
B_1	8	#5	13'-9"	——
B_2	4	#4	35'-9"	——
D	8	#4	4'-9"	⊏
U	54	#3	7'-3"	⊔
U_1	8	#4	7'-3"	⊔
Precast Prestressed Conc. Deck Beams		Sq. Ft.	207	
Reinforcement Bars		Pound	940	
Total Weight Ea. Beam		Pound	47000	

SPAN 1 OR 4

PRECAST PRESTRESSED CONCRETE DECK BEAM DETAILS
PROPOSED BRIDGE OVER UNION PACIFIC RAILROAD AND CASEY FORK
TR 227 (GREEN ROAD)
SECTION 98-11120-00-BR
JEFFERSON COUNTY, ILLINOIS

Sheet 25 of 35

Job No. 52303

05/24/2005

RHUTASEL and ASSOCIATES, INC.
CONSULTING ENGINEERS • LAND SURVEYORS
CENTRALIA, ILLINOIS FREEBURG, ILLINOIS