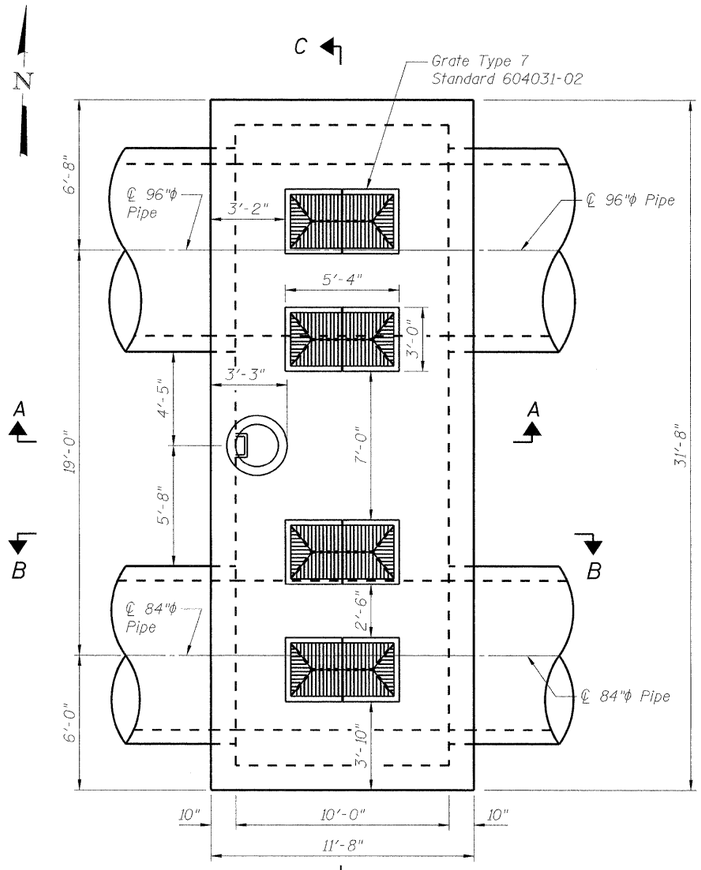

TOP PLAN

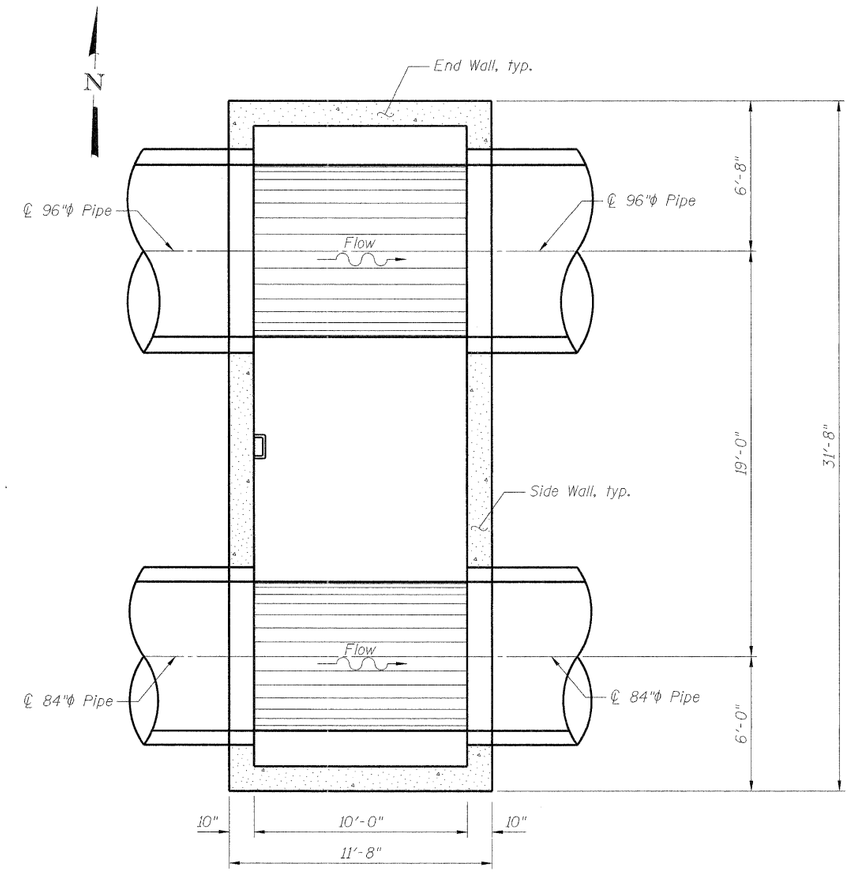

SECTIONAL PLAN

JUNCTION CHAMBER #3
BILL OF MATERIAL

Item	Unit	Total
Removal and Disposal of Unsuitable Material	Cu. Yds.	15
Porous Granular Embankment	Cu. Yds.	15
Concrete Structures	Cu. Yds.	75.4
Reinforcement Bars	Pound	7,030
Grates, Type 7	Each	4
Frames and Lids, Type 1, Closed Lid	Each	1
Braced Excavation	Cu. Yds.	334

NOTES

For additional information, see Standard Specifications.

For reinforcement details, see Sheets 33-34.

For Station and Offset, see Proposed Storm Sewer Plan and Profile.

The maximum width of excavation is the width of the junction chamber plus 4 feet, and the maximum length is the length of the junction chamber plus 4 feet. Excavation outside the maximum dimensions specified will not be measured for payment.

The design of the braced excavation is the responsibility of the Contractor. The Contractor shall submit drawings and design for the braced excavation to the Engineer for approval. The braced excavation design and drawings shall be signed and sealed by an Illinois licensed Structural Engineer, submitted and approved prior to the start of any work. The Engineer's approval shall not relieve the Contractor from the sole responsibility of the structural integrity of the braced excavation system.

All dimensions and elevations shall be verified prior to construction.

Concrete pipe sizes shall be coordinated with openings provided into junction chambers before pouring concrete.

Concrete cover for reinforcement steel to be 2" unless otherwise noted.

All concrete edges shall be chamfered 1 inch.

Concrete Compressive Strength fc'=3,500 psi.

Steel Yield Stength=60,000 psi.

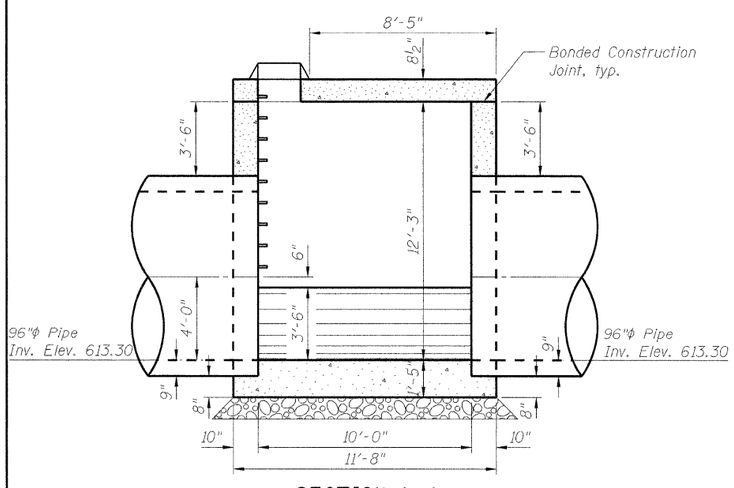

SECTION A-A

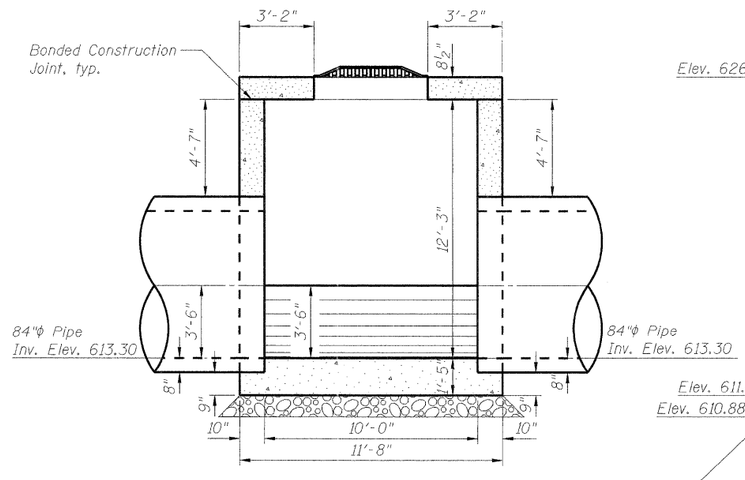

SECTION B-B

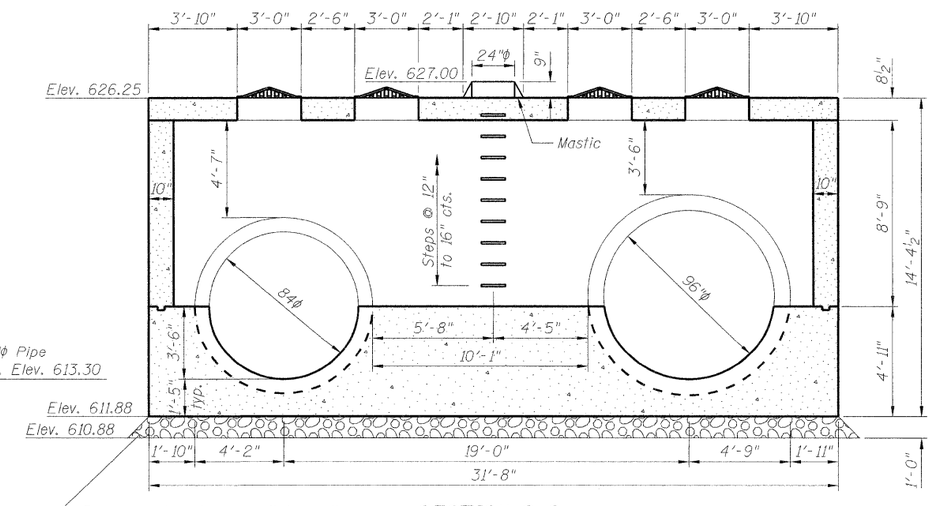

SECTION C-C

FILE NAME = g:\project\2102155_011\cadd\structure\007_Box3_Dimensions.dgn

ENTRAN	USER NAME = 2bookd	DESIGNED - TWO	REVISED -	STATE OF ILLINOIS DEPARTMENT OF TRANSPORTATION	JUNCTION CHAMBER #3 GENERAL PLAN AND ELEVATION	F.A.I. RTE. 190	SECTION 0102.5-T	COUNTY COOK	TOTAL SHEETS 41	SHEET NO. 32
		CHECKED - BHS	REVISED -					CONTRACT NO. 60F90		
	PLOT SCALE = N/A	DRAWN - TWO	REVISED -							
	PLOT DATE = 9/7/2011	CHECKED - GSP	REVISED -		SHEET NO. OF SHEETS	FED. ROAD DIST. NO. 1	ILLINOIS	FED. AID PROJECT		