11-18-11 LETTING ITEM 077

F.A.I. RTE.	SECTION	COUNTY	TOTAL SHEETS	SHEET NO.
190	0102.5-T	COOK	41	1
	ILLINOIS	CONTRACT NO. 60F90		

D-91-287-09

FOR INDEX OF SHEETS, SEE SHEET NO. 2

STATE OF ILLINOIS
DEPARTMENT OF TRANSPORTATION
DIVISION OF HIGHWAYS

PROPOSED HIGHWAY PLANS

FAI ROUTE 190 (I-190)
AT I-190 / FAI ROUTE 294 (TRI-STATE TOLLWAY)
(FROM CANADIAN NATIONAL RAILROAD TO DES PLAINES RIVER)
SECTION 0102.5-T
COOK COUNTY
NEW STORM SEWER
C-91-287-09

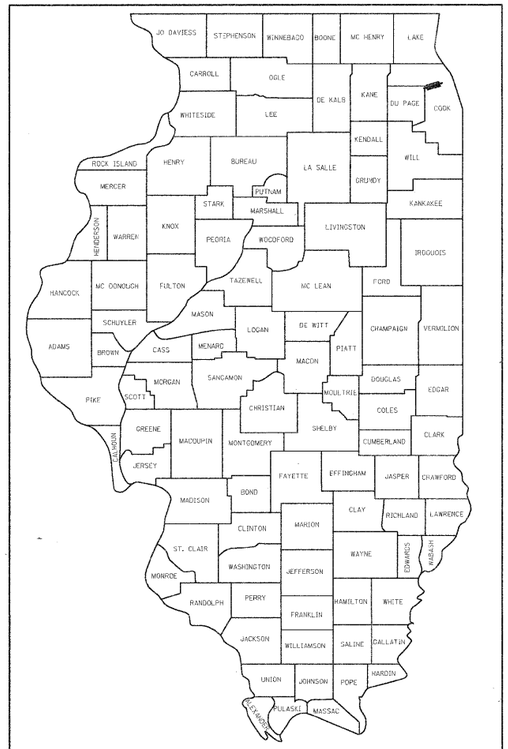

LOCATION OF SECTION INDICATED THUS:-

IMPROVEMENT BEGINS STA. 156+67.76

IMPROVEMENT ENDS STA. 208+97.90

IMPROVEMENT IS LOCATED IN THE CITY OF CHICAGO AND VILLAGE OF ROSEMONT

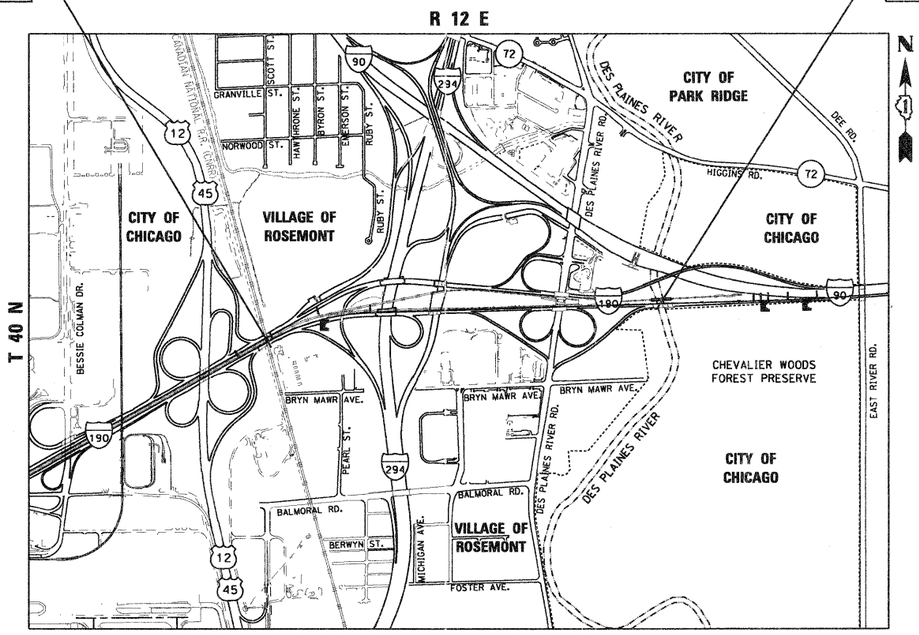

LOCATION MAP
NOT TO SCALE
GROSS LENGTH = 5230.14 FT. = 0.991 MILE
NET LENGTH = 5230.14 FT. = 0.991 MILE

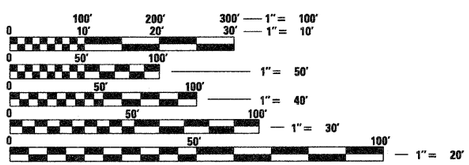

FULL SIZE PLANS HAVE BEEN PREPARED USING STANDARD ENGINEERING SCALES. REDUCED SIZED PLANS WILL NOT CONFORM TO STANDARD SCALES. IN MAKING MEASUREMENTS ON REDUCED PLANS, THE ABOVE SCALES MAY BE USED.

D.I.G.G.E.R.
CHICAGO UTILITY ALERT NETWORK (C.U.A.N.)
1-312-744-7000
CALL 72 HOURS PRIOR TO DIGGING

J.U.L.I.E.
JOINT UTILITY LOCATION INFORMATION FOR EXCAVATION
1-800-892-0123
OR 811

PROJECT ENGINEER ROBERT BORO T: 847-705-4237
PROJECT MANAGER ISSAM RAYYAN

CONTRACT NO. 60F90

ENTRAN
5440 N. CUMBERLAND AVE, SUITE 111
CHICAGO, IL 60656

LICENSED PROFESSIONAL ENGINEER
THOMAS M. HEIN
062-053199
STATE OF ILLINOIS

Thomas M. Hein
THOMAS M. HEIN, P. E.
IL. LIC. NO. 062-053199
EXP 11-30-11
DATE 9-9-11

STATE OF ILLINOIS
DEPARTMENT OF TRANSPORTATION
DIVISION OF HIGHWAYS

SUBMITTED SEPTEMBER 9, 2011
Diane M. O'Keefe for
DEPUTY DIRECTOR OF HIGHWAYS, REGION ENGINEER
October 14 2011
Scott E. Stitt, P.E. for
acting ENGINEER OF DESIGN AND ENVIRONMENT
October 14 2011
William R. Frey for
Interim DIRECTOR OF HIGHWAYS, CHIEF ENGINEER

PRINTED BY THE AUTHORITY OF THE STATE OF ILLINOIS

INDEX OF SHEETS
****

1	COVER SHEET
2	INDEX OF SHEETS, HIGHWAY STANDARDS, GENERAL NOTE AND COMMITMENTS
3 - 4	SUMMARY OF QUANTITIES
5	TYPICAL SECTIONS
6 - 7	SCHEDULE OF QUANTITIES
8 - 9	ALIGNMENT, TIES, AND BENCHMARKS
10 - 11	REMOVAL PLAN
12 - 15	STORM SEWER PLAN AND PROFILE
16	STORM SEWER PLAN AND PROFILE DETAIL
17	RIVER ROAD PLAN DETAIL
18	STORM SEWER SCHEDULE
19 - 22	SUE INVESTIGATION OF UNDERGROUND UTILITIES
23 - 24	EROSION AND SEDIMENT CONTROL PLAN
25	EROSION AND SEDIMENT CONTROL DETAILS
26 - 34	STRUCTURAL SHEETS
35 - 36	SOIL BORING LOGS
37 - 38	DRAINAGE DETAILS
39 - 41	DISTRICT DETAILS

HIGHWAY STANDARDS
****

280001-05 TEMPORARY EROSION CONTROL SYSTEMS

442201-03 CLASS C AND D PATCHES

602001-02 CATCH BASIN, TYPE A

602006-03 CATCH BASIN, TYPE B

602701-02 MANHOLE STEPS

604001-03 FRAME AND LIDS, TYPE 1

604031-02 GRATE, TYPE 7

604036-02 GRATE, TYPE 8

701601-07 URBAN LANE CLOSURE, MULTILANE, 1W OR 2W WITH NONTRAVERSABLE MEDIAN

GENERAL NOTES - MISCELLANEOUS
****

BEFORE STARTING ANY EXCAVATION, THE CONTRACTOR SHALL CALL "JULIE" AT (800) 892-0123 AND "DIGGER" AT (312) 744-7000 FOR FIELD LOCATIONS OF BURIED ELECTRIC, TELEPHONE AND GAS FACILITIES. (48 HOURS NOTIFICATION IS REQUIRED).

THE CONTRACTOR SHALL COORDINATE CONSTRUCTION ACTIVITIES WITH THE RESPECTIVE UTILITY COMPANIES, THE ILLINOIS STATE TOLL HIGHWAY AUTHORITY, THE CITY OF CHICAGO, AND THE VILLAGE OF ROSEMONT.

THE CONTRACTOR WILL NOT BE ALLOWED TO SET UP A YARD OR FIELD OFFICE ON STATE OR VILLAGE OF ROSEMONT PROPERTY WITHOUT WRITTEN PERMISSION FROM THE DEPARTMENT.

ALL DAMAGE TO EXISTING PAVEMENT, PAVEMENT MARKINGS OR RAISED REFLECTIVE PAVEMENT MARKINGS OUTSIDE THE REMOVAL LIMITS SHOWN ON THE PLANS SHALL BE REPLACED AT NO ADDITIONAL COST TO THE DEPARTMENT.

BEFORE BEGINNING ANY WORK, THE CONTRACTOR SHALL RETAIN AND RECORD FOR FUTURE REFERENCE, ALL EXISTING PAVEMENT MARKING LINES, RAISED REFLECTIVE PAVEMENT MARKERS, TREES, AND LANDSCAPING ELEMENTS IN ORDER THAT THESE LOCATIONS CAN BE RE-ESTABLISHED. EXACT LOCATIONS OF ALL PAVEMENT MARKINGS AND LANDSCAPING SHALL BE AS DIRECTED BY THE ENGINEER.

IT SHALL BE THE CONTRACTORS RESPONSIBILITY TO VERIFY ALL DIMENSIONS AND CONDITIONS EXISTING IN THE FIELD PRIOR TO ORDERING MATERIALS AND CONSTRUCTION.

THE RESIDENT ENGINEER SHALL CONTACT THE TRAFFIC CONTROL SUPERVISOR AT (847) 705-4470 A MINIMUM OF 72 HOURS PRIOR TO THE PLACEMENT ON ANY TEMPORARY TRAFFIC CONTROL DEVICES.

THE RESIDENT ENGINEER SHALL CONTACT THE EXPRESSWAYS SECTION IN THE BUREAU OF TRAFFIC REGARDING PAVEMENT MARKINGS.

DO NOT SCALE PLANS FOR CONSTRUCTION DIMENSIONS.

SAW CUTS WILL NOT BE PAID FOR SEPARATELY, BUT SHALL BE INCLUDED IN THE COST OF THE ITEM BEING REMOVED.

ANY REFERENCE TO STANDARDS THROUGHOUT THE PLANS OR SPECIAL PROVISIONS SHALL BE INTERPRETED AS THE LATEST STANDARD OF THE DEPARTMENT AS SHOWN.

WHERE SECTION OR SUBSECTION MONUMENTS ARE ENCOUNTERED, THE ENGINEER SHALL BE NOTIFIED BEFORE SUCH MONUMENTS ARE REMOVED. THE CONTRACTOR SHALL PROTECT AND CAREFULLY PRESERVE ALL PROPERTY MARKS AND MONUMENTS. THE ENGINEER, OR AN AUTHORIZED SURVEYOR OR AGENT WILL WITNESS OR OTHERWISE REFERENCE AND RESET MONUMENTS AS NECESSARY. ALL PROPERTY CORNERS EXCEPT THOSE WITHIN AREAS WHERE THE SCHEDULE SHOWS PLACEMENT OF R.O.W. MARKERS SHALL REMAIN UNDISTURBED.

THE CONTRACTOR AS REQUIRED, SHALL OBTAIN ALL NECESSARY PERMITS PRIOR TO COMMENCING WITH CONSTRUCTION.

THE CONTRACTOR WILL BE REQUIRED TO COMPLY WITH STATE OR LOCAL REGULATIONS REGARDING AIR, WATER, AND NOISE POLLUTION.

THE CONTRACTORS OPERATIONS AND TEMPORARY STORAGE ACTIVITIES SHALL BE LIMITED TO THE WORK AREA AND/OR CONSTRUCTION LIMITS. ANY ADDITIONAL STAGING AREAS ADJACENT TO THE PROJECT ARE SUBJECT TO PRIOR APPROVAL BY THE ENGINEER. NO ADDITIONAL COMPENSATION WILL BE ALLOWED TO THE CONTRACTOR FOR COMPLIANCE WITH THE ABOVE REQUIREMENTS.

THE CONTRACTORS PERSONNEL SHALL PARK ONLY IN THE DESIGNATED AREAS AND AT THE DISCRETION OF THE ENGINEER.

ACCESS SHALL BE PROVIDED AT ALL TIMES TO PROPERTIES ABUTTING THE PROPOSED IMPROVEMENT.

ALL ELEVATIONS IN THE PLANS ARE BASED UPON THE NORTH AMERICAN VERTICAL DATUM OF 1988 (NAVD88).

ALL JACKING / RECEIVING PITS ON STATE OR TOLLWAY PROPERTY MUST BE FENCED AND PROTECTED AGAINST THE ENTRY OF VEHICLES.

JACKING / RECEIVING PITS AND THE RIGHT-OF-WAY FENCE MUST BE TEMPORARILY FENCED WHEN THE CONTRACTOR IS NOT WORKING.

GENERAL NOTES - DRAINAGE
****

THE COST OF MAKING ANY CONNECTIONS TO EXISTING DRAINAGE STRUCTURES SHALL BE INCLUDED IN THE UNIT PRICE FOR THE PROPOSED ITEM OF WORK SPECIFIED.

LENGTHS AND SIZES OF STORM SEWERS AS SHOWN ON THE PLANS AND DRAINAGE STRUCTURE ELEVATIONS SHALL BE VERIFIED BY THE CONTRACTOR IN THE FIELD PRIOR TO ORDERING AND INSTALLATION OF DRAINAGE ITEMS. THE INVERTS OF THE PROPOSED DRAINAGE STRUCTURES MAY REQUIRE REVISIONS TO MEET EXISTING FIELD CONDITIONS. ANY ADJUSTMENTS SHALL BE AS DIRECTED BY THE ENGINEER.

THE CONTRACTOR SHALL MAINTAIN THE SURFACE DRAINAGE OF THE ROAD, STORM SEWER FLOWS FROM THE PUMP STATION, AND ADJACENT WORK AREAS DURING CONSTRUCTION OF THIS PROJECT. THIS WORK SHALL NOT BE PAID FOR SEPARATELY, BUT SHALL BE CONSIDERED IN THE COST OF THE CONTRACT.

STORM SEWER SHALL BE BACKFILLED IN ACCORDANCE WITH ARTICLE 550.07 METHOD 1 ONLY.

ANY LOOSE MATERIAL DEPOSITED IN THE FLOW LINE OF DITCHES, GUTTERS, CROSSROAD PIPES, OR DRAINAGE STRUCTURES DUE TO CONSTRUCTION OPERATIONS SHALL BE REMOVED AT THE CLOSE OF EACH WORKING DAY. AT THE CONCLUSION OF CONSTRUCTION OPERATIONS, ALL STRUCTURES SHALL BE FREE OF DIRT AND DEBRIS. THIS WORK SHALL NOT BE PAID FOR SEPARATELY, BUT SHALL BE CONSIDERED IN THE COST OF THE CONTRACT.

GENERAL NOTES - UTILITIES
****

THE CONTRACTOR SHALL PROTECT EXISTING AND NEW UTILITIES. WHEN REQUIRED BY THE ENGINEER, THE CONTRACTOR SHALL BRACE AND SUPPORT THE UTILITIES PROPERLY IN ORDER TO PREVENT SETTLEMENT, DISPLACEMENT, OR DAMAGE TO THE UTILITIES. THE PROTECTION OF THE UTILITIES AS SPECIFIED HEREIN WILL NOT BE PAID FOR SEPARATELY, BUT THE COST THEREOF SHALL BE CONSIDERED AS INCIDENTAL TO THE CONTRACT.

THE CONTRACTOR SHALL BE RESPONSIBLE FOR CONTACTING THE OWNERS OF ALL EXISTING FACILITIES SO THE UTILITIES AND THEIR APPURTENANCES MAY BE LOCATED AND ADJUSTED OR MOVED, IF NECESSARY, PRIOR TO THE START OF CONSTRUCTION OPERATIONS. THE CONTRACTOR SHALL COOPERATE WITH ALL UTILITY OWNERS AS PROVIDED FOR IN THE STANDARD SPECIFICATIONS.

GENERAL NOTES - LANDSCAPING
****

FERTILIZER NUTRIENTS SHALL BE APPLIED AT THE FOLLOWING RATES PER ACRE:

	SEEDING	SODDING
NITROGEN FERTILIZER NUTRIENT -	90 LBS./ACRE	60 LBS./ACRE
PHOSPHORUS FERTILIZER NUTRIENT -	90 LBS./ACRE	60 LBS./ACRE
POTASSIUM FERTILIZER NUTRIENT -	90 LBS./ACRE	60 LBS./ACRE

GENERAL NOTES - ILLINOIS STATE TOLL HIGHWAY AUTHORITY
****

THE CONTRACTOR SHALL LOCATE AND EXPOSE THE TOLLWAYS FIBER OPTIC LINE PRIOR TO COMMENCING CONSTRUCTION.

THE CONTRACTOR SHALL PROVIDE A SIGN NEAR THE PROJECT LOCATION WHICH SHOWS THE TYPE OF FACILITY AND PERMIT NUMBER.

BEFORE CONSTRUCTION BEGINS, THE CONTRACTOR MUST OBTAIN A CONSTRUCTION PERMIT FROM THE ILLINOIS STATE TOLL HIGHWAY AUTHORITY FOR WORK UNDER I-294 (TRI-STATE TOLLWAY) FROM STATION 163+43 TO STATION 180+25.

COMMITMENTS
****

NONE

STORM SEWER INSTALLATION UPSTREAM OF PUMP STATION #24
****

COORDINATE SEQUENCING OF ELECTRICAL SUB-STATION POWER DOWN AND REMOVAL OF EXISTING EQUIPMENT PRIOR TO COMMENCING EXCAVATION AND STORM SEWER INSTALLATION.

INSTALL STORM SEWER, FITTINGS, AND MANHOLE RISERS FROM THE PUMP STATION INTAKE TO THE EXISTING STORM SEWER.

REMOVE CONFLICTING SECTION OF EXISTING STORM SEWER AND MAINTAIN SEWER FLOW TO THE EXISTING PUMP STATION.

COMPLETE INSTALLATION OF PROPOSED STORM SEWER AND FINALIZE CONNECTION TO EXISTING SEWER. COORDINATE TIMING OF STORM SEWER CONNECTION FOR AN EXTENDED PERIOD OF DRY WEATHER AND LOW FLOW CONDITIONS.

MAINTAIN FLOW DIVERSION TO THE EXISTING PUMP STATION UNTIL SUCH TIME THAT THE NEW PUMP STATION IS OPERATIONAL.

STORM SEWER, JACKED IN PLACE THROUGH EXISTING LATERAL
****

COMPLETE STORM SEWER REMOVAL AS SPECIFIED IN THE PLANS AT LOCATION OF STORM SEWER CROSSING.

MAINTAIN FLOW OF EXISTING STORM SEWER TO DOWNSTREAM LOCATION (COST IS CONSIDERED INCIDENTAL TO CONTRACT).

JACK STORM SEWER IN PLACE.

UPON COMPLETION AND ACCEPTANCE OF DOWNSTREAM MAINLINE SEWER, CONTINUE INSTALLATION OF STORM SEWER LATERAL AND PREPARE DIRECT CONNECTION.

SUMMARY OF QUANTITIES

CODE NO.	ITEM	UNIT	100% STATE URBAN TOTAL QUANTITY	CONSTRUCTION TYPE CODE 0040	
20100110	TREE REMOVAL (6 TO 15 UNITS DIAMETER)	UNIT	316	316	0
20100210	TREE REMOVAL (OVER 15 UNITS DIAMETER)	UNIT	123	123	0
20101100	TREE TRUNK PROTECTION	EACH	22	22	0
20200100	EARTH EXCAVATION	CU YD	85	85	0
20700220	POROUS GRANULAR EMBANKMENT	CU YD	47	0	47
20800150	TRENCH BACKFILL	CU YD	391	391	0
21101615	TOPSOIL FURNISH AND PLACE, 4"	SQ YD	21,741	21,741	0
21301072	EXPLORATION TRENCH 72" DEPTH	FOOT	105	105	0
25000200	SEEDING, CLASS 2	ACRE	2.4	2.4	0.0
25000350	SEEDING, CLASS 7	ACRE	4.5	4.5	0.0
25000400	NITROGEN FERTILIZER NUTRIENT	POUND	341	341	0
25000500	PHOSPHORUS FERTILIZER NUTRIENT	POUND	341	341	0
25000600	POTASSIUM FERTILIZER NUTRIENT	POUND	341	341	0
25000750	MOWING	ACRE	4.5	4.5	0.0
25100630	EROSION CONTROL BLANKET	SQ YD	11,602	11,602	0
25200100	SODDING	SQ YD	10,139	10,139	0
25200200	SUPPLEMENTAL WATERING	UNIT	152	152	0
28000305	TEMPORARY DITCH CHECKS	FOOT	60	60	0
28000400	PERIMETER EROSION BARRIER	FOOT	4,912	4,912	0
28000510	INLET FILTERS	EACH	7	7	0
35501316	HOT-MIX ASPHALT BASE COURSE, 8"	SQ YD	115	115	0
40201000	AGGREGATE FOR TEMPORARY ACCESS	TON	34	34	0
~~40603310~~	~~HOT MIX ASPHALT SURFACE COURSE, MIX "C", N50~~	~~TON~~	~~13~~	~~13~~	0
40600100	BITUMINUS MATERIALS (PRIME COAT)	GALLON	11	11	
40603340	HOT-MIX ASPHALT SURFACE COURSE, MIX "D", N70	TON	25	25	0
44000100	PAVEMENT REMOVAL	SQ YD	115	115	0
44201765	CLASS D PATCHING, TYPE II, 10 INCH	SQ YD	17	17	0
44201771	CLASS D PATCHING, TYPE IV, 10 INCH	SQ YD	89	89	0
50300225	CONCRETE STRUCTURES	CU YD	196	0	196
50800105	REINFORCEMENT BARS	POUND	22,130	0	22,130
~~54218506~~	~~REINFORCED CONCRETE PIPE TEE, 72" PIPE WITH 36" RISER~~	~~EACH~~	~~3~~	~~3~~	~~0~~
~~54218528~~	~~REINFORCED CONCRETE PIPE TEE, 84" PIPE WITH 36" RISER~~	~~EACH~~	~~8~~	~~8~~	~~0~~
~~54218550~~	~~REINFORCED CONCRETE PIPE TEE, 96" PIPE WITH 36" RISER~~	~~EACH~~	~~2~~	~~2~~	~~0~~
54248510	CONCRETE COLLAR	CU YD	19	19	0
550A0520	STORM SEWERS, CLASS A, TYPE 2 72"	FOOT	389	389	0
550A0540	STORM SEWERS, CLASS A, TYPE 2 84"	FOOT	1195	1195	0

CODE NO.	ITEM	UNIT	100% STATE URBAN TOTAL QUANTITY	CONSTRUCTION TYPE CODE 0040	
550A0640	STORM SEWERS, CLASS A, TYPE 3 12"	FOOT	89	89	0
550A0660	STORM SEWERS, CLASS A, TYPE 3 15"	FOOT	24	24	0
550A0680	STORM SEWERS, CLASS A, TYPE 3 18"	FOOT	47	47	0
550A0710	STORM SEWERS, CLASS A, TYPE 3 24"	FOOT	16	16	0
550A0720	STORM SEWERS, CLASS A, TYPE 3 27"	FOOT	15	15	0
550A0730	STORM SEWERS, CLASS A, TYPE 3 30"	FOOT	16	16	0
550A0840	STORM SEWERS, CLASS A, TYPE 3 84"	FOOT	274	274	0
550A1160	STORM SEWERS, CLASS A, TYPE 4 96"	FOOT	964	964	0
550A1710	STORM SEWERS, CLASS A, TYPE 6 84"	FOOT	78	78	0
55100500	STORM SEWER REMOVAL 12"	FOOT	98	98	0
55100700	STORM SEWER REMOVAL 15"	FOOT	48	48	0
55100900	STORM SEWER REMOVAL 18"	FOOT	54	54	0
55101200	STORM SEWER REMOVAL 24"	FOOT	75	75	0
55101300	STORM SEWER REMOVAL 27"	FOOT	52	52	0
55101400	STORM SEWER REMOVAL 30"	FOOT	43	43	0
55102300	STORM SEWER REMOVAL 72"	FOOT	401	401	0
55102500	STORM SEWER REMOVAL 84"	FOOT	215	215	0
56106600	ADJUSTING WATER MAIN 12"	FOOT	60	60	
60200205	CATCH BASINS, TYPE A, 4'-DIAMETER, TYPE 1 FRAME, CLOSED LID	EACH	3	3	0
60200805	CATCH BASINS, TYPE A, 4'-DIAMETER, TYPE 8 GRATE	EACH	2	2	0
60203905	CATCH BASINS, TYPE A, 5'-DIAMETER, TYPE 1 FRAME, CLOSED LID	EACH	4	4	0
60206600	CATCH BASINS, TYPE B, TYPE 7 GRATE	EACH	1	1	0
60218400	MANHOLES, TYPE A, 4'-DIAMETER, TYPE 1 FRAME, CLOSED LID	EACH	2	0	2
60257900	MANHOLES TO BE RECONSTRUCTED	EACH	1	1	
60402110	GRATES, TYPE 7	EACH	4	0	4
~~60402210~~	~~GRATES, TYPE 8~~	~~EACH~~	~~1~~	~~1~~	~~0~~
60406100	FRAMES AND LIDS, TYPE 1, CLOSED LID	EACH	1	0	1
60500040	REMOVING MANHOLES	EACH	2	2	0
66400105	CHAIN LINK FENCE, 4'	FOOT	206	206	0
66400305	CHAIN LINK FENCE, 6'	FOOT	38	38	0
* 66900200	NON-SPECIAL WASTE DISPOSAL	CU YD	6,450	6,450	0
67000400	ENGINEER'S FIELD OFFICE, TYPE A	CAL MO	12	12	0
* 66900450	SPECIAL WASTE PLANS AND REPORTS	L SUM	1.0	1.0	0.0
67100100	MOBILIZATION	L SUM	1.0	1.0	0.0
* 66900530	SOIL DISPOSAL ANALYSIS	EACH	3	3	0
70102630	TRAFFIC CONTROL AND PROTECTION, STANDARD 701601	L SUM	1.0	1.0	0.0
70106800	CHANGEABLE MESSAGE SIGN	CAL MO	24	24	0
X0323389	STORM SEWER CONNECTION	EACH	9	9	0
X2020502	BRACED EXCAVATION	CU YD	1,035	0	1,035
X6022402	MANHOLES, TYPE A, 4'-DIAMETER, TYPE 1 FRAME, CLOSED LID, SPECIAL	EACH	20	20	0

* SPECIALTY ITEMS

Rev.

ENTRAN

USER NAME = 2bookd	DESIGNED - DJB	REVISED -	
	DRAWN - ENTRAN	REVISED -	
PLOT SCALE = 50.00 ' / IN.	CHECKED - DAK	REVISED -	
PLOT DATE = 9/7/2011	DATE - 09/07/11	REVISED -	

STATE OF ILLINOIS
DEPARTMENT OF TRANSPORTATION

PUMP STATION 24 STORM SEWER IMPROVEMENTS
SUMMARY OF QUANTITIES

SCALE: 50.00 ' / IN. | SHEET NO. OF SHEETS | STA. TO STA.

F.A.I. RTE.	SECTION	COUNTY	TOTAL SHEETS	SHEET NO.
190	0102.5-T	COOK	41	3

CONTRACT NO. 60F90

FED. ROAD DIST. NO. 1 | ILLINOIS | FED. AID PROJECT

FILE NAME = G:\projects\2102155.011\CADD\Civil\Sht\0160F90-03sht-500.dgn

SUMMARY OF QUANTITIES

CODE NO.	ITEM	UNIT	TOTAL QUANTITY	CONSTRUCTION TYPE CODE ~~0014~~	
X6640300	CHAIN LINK FENCE REMOVAL	FOOT	~~244~~	244	0
X7011015	TRAFFIC CONTROL AND PROTECTION (EXPRESSWAYS)	L SUM	1.0	1.0	0.0
Z0013797	STABILIZED CONSTRUCTION ENTRANCE	SQ YD	560	560	0
Z0013798	CONSTRUCTION LAYOUT	L SUM	1.0	1.0	0.0
Z0030850	TEMPORARY INFORMATION SIGNING	SQ FT	51	51	0
~~Z5421592~~	~~REINFORCED CONCRETE PIPE ELBOW 72"~~	~~EACH~~	~~4~~	~~4~~	~~0~~
~~Z5421593~~	~~REINFORCED CONCRETE PIPE ELBOW 84"~~	~~EACH~~	~~10~~	~~10~~	~~0~~
~~Z5421594~~	~~REINFORCED CONCRETE PIPE ELBOW 96"~~	~~EACH~~	~~1~~	~~1~~	~~0~~
55202184	STORM SEWERS JACKED IN PLACE, 84"	FOOT	1,801	1,801	0
55202196	STORM SEWERS JACKED IN PLACE, 96"	FOOT	876	876	0
~~Z6022400~~	~~MANHOLES, TYPE A, 3' DIA. SPECIAL (INCLUDING FRAMES AND LIDS)~~	~~EACH~~	~~6~~	~~6~~	~~6~~
54219272	REINFORCED CONCRETE PIPE TEE, 72" PIPE WITH 48" RISER	EACH	3	3	0
54219284	REINFORCED CONCRETE PIPE TEE, 84" PIPE WITH 48" RISER	EACH	9	9	0
54219296	REINFORCED CONCRETE PIPE TEE, 96" PIPE WITH 48" RISER	EACH	4	4	0

CODE NO.	ITEM	UNIT	TOTAL QUANTITY	CONSTRUCTION TYPE CODE ~~0014~~ 0040	

(*) SPECIALTY ITEMS

FILE NAME = G:\projects\2102155.011\CADD\Civil\Sht\D160F90-03sht-SQC.dgn

ENTRAN

USER NAME = 2bookd	DESIGNED - DJB	REVISED -	
	DRAWN - ENTRAN	REVISED -	
PLOT SCALE = 50.00 ' / IN.	CHECKED - DAK	REVISED -	
PLOT DATE = 9/7/2011	DATE - 09/07/11	REVISED -	

STATE OF ILLINOIS
DEPARTMENT OF TRANSPORTATION

PUMP STATION 24 STORM SEWER IMPROVEMENTS
SUMMARY OF QUANTITIES

SCALE: 50.00 ' / IN. | SHEET NO. OF SHEETS | STA. TO STA.

Rev.

F.A.I. RTE.	SECTION	COUNTY	TOTAL SHEETS	SHEET NO.
190	0102.5-T	COOK	41	4

CONTRACT NO. 60F90

FED. ROAD DIST. NO. 1 | ILLINOIS | FED. AID PROJECT

PIPE TRENCH SECTION FOR SINGLE PIPE

STA. 156+67.76 TO STA. 157+04.59

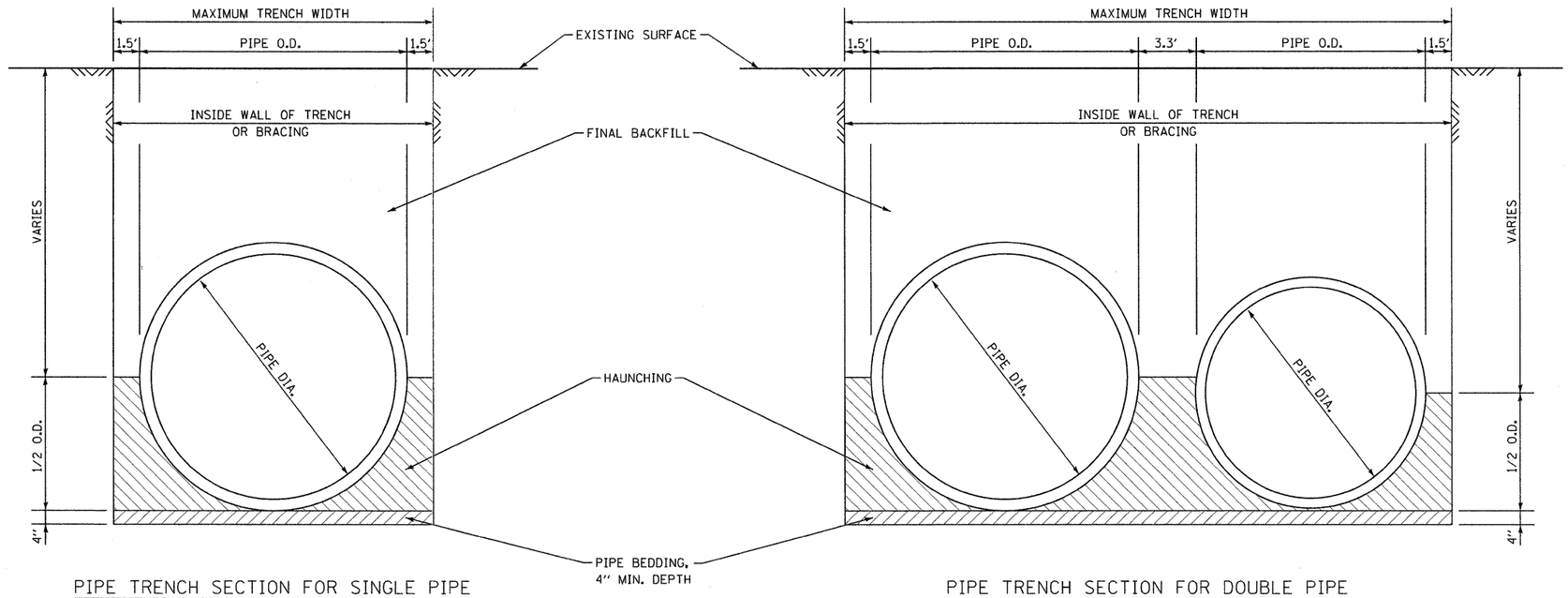

PIPE TRENCH SECTION FOR DOUBLE PIPE

STA. 157+32.29 TO STA. 160+52.66
STA. 182+68.85 TO STA. 183+56.69
STA. 188+57.20 TO STA. 190+08.86

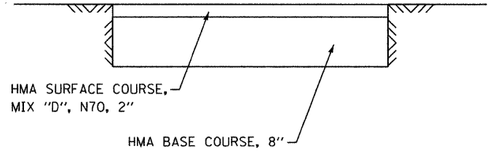

CTA PARKING LOT SECTION

HMA MIXTURE REQUIREMENTS

MIX DESIGNS	AIR VOIDS
CTA PARKING LOT	
HMA SURFACE COURSE, MIX 'D', N70, (IL-9.5mm); 2"	4% @ 70 GYRATIONS
HMA BASE COURSE (HMA BINDER IL-19 mm); 8"	4% @ 70 GYRATIONS
PATCHING	
HMA SURFACE COURSE, MIX 'D', N70, (IL-9.5mm); 2"	4% @ 70 GYRATIONS
CLASS D PATCH (HMA BINDER IL-19mm)	4% @ 70 GYRATIONS

NOTE:

THE UNIT WEIGHT USED TO CALCULATE ALL HOT-MIX ASPHALT SURFACE MIXTURES IS 112 LBS/SY/IN.

THE "AC TYPE" FOR POLYMERIZED HMA MIXES SHALL BE "SBS/SBR PG 76-22" AND FOR NON-POLYMERIZED HMA THE "AC TYPE" SHALL BE "PG 64-22" UNLESS MODIFIED BY DISTRICT ONE SPECIAL PROVISIONS.
FOR "PERCENT OF RAP" SEE DISTRICT ONE SPECIAL PROVISIONS.

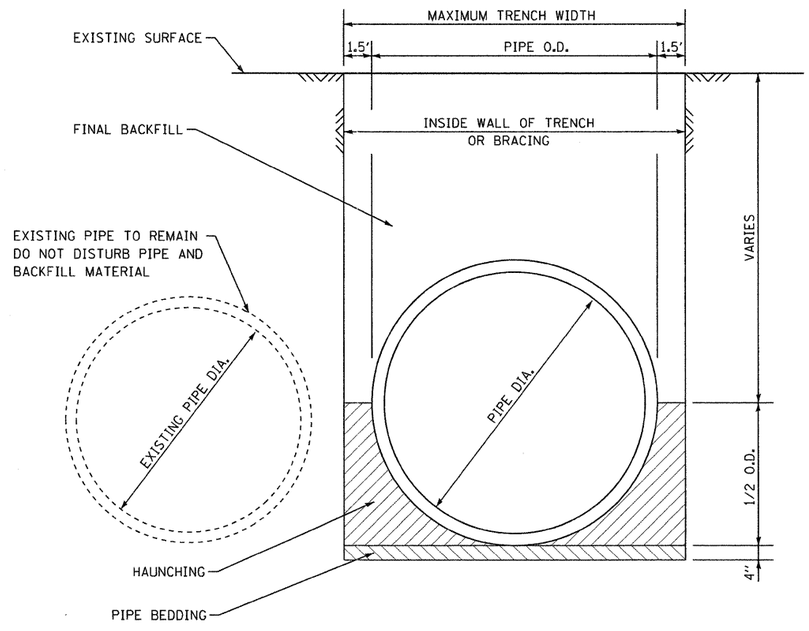

PIPE TRENCH SECTION - ADJACENT TO EXISTING PIPE

STA. 160+52.66 TO STA. 163+43.25
STA. 180+24.77 TO STA. 182+68.85
STA. 183+68.34 TO STA. 186+72.22
STA. 192+04.06 TO STA. 194+58.63
STA. 196+77.20 TO STA. 198+40.55
STA. 200+59.95 TO STA. 205+04.00
STA. 207+66.71 TO STA. 208+97.90

THE MATERIAL FOR PIPE BEDDING AND HAUNCHING SHALL BE WET COARSE AGGREGATE OR MOIST FINE AGGREGATE AND SHALL MEET THE REQUIREMENTS OF THE STANDARD SPECIFICATIONS. THE AGGREGATE GRADATION SHALL BE CA-6, CA-9, CA-10, CA-18, FA-1, FA-2, FA-5, FA-6, FA-10, OR FA-21.

THE MATERIAL FOR FINAL BACKFILL SHALL BE SUITABLE MATERIAL EXCAVATED FROM THE TRENCH OR SELECTED GRANULAR MATERIAL MEETING THE REQUIREMENTS OUTLINED FOR HAUNCHING. BACKFILL MATERIAL SHALL BE DEPOSITED AND COMPACTED AS SPECIFIED IN METHOD 1 IN ACCORDANCE WITH THE STANDARD SPECIFICATIONS.

FINAL BACKFILL SHALL EXTEND TO THE EXISTING OR FINISHED SURFACE.

THE BACKFILL MATERIAL FOR TRENCHES WHERE THE INNER EDGE OF THE TRENCH IS FOUND WITHIN 2 FT OF THE EDGE OF PAVEMENT, CURB, GUTTER, STABILIZED SHOULDER, OR SIDEWALK, SHALL BE TRENCH BACKFILL IN ACCORDANCE WITH ARTICLE 208 OF THE STANDARD SPECIFICATIONS.

GENERAL NOTES

1. THE WORK SHALL BE CONSTRUCTED IN CONFORMANCE WITH THE APPLICABLE PORTIONS OF SECTION 550 OF THE STANDARD SPECIFICATIONS
2. THE EXCAVATION, BEDDING, BACKFILL, AND DISPOSAL OF MATERIAL SHALL BE INCLUDED IN THE UNIT PRICE OF STORM SEWERS OF THE TYPE AND CLASS SPECIFIED.
3. IF A WATERMAIN IS ENCOUNTERED DURING STORM SEWER CONSTRUCTION, THE REQUIREMENTS OF THE IEPA SHALL GOVERN THE HORIZONTAL AND VERTICAL SEPERATION OF THE WATERMAIN AND STORM SEWER.
4. ALL EXCAVATED MATERIAL NOT NEEDED FOR THE WORK SHALL BE DISPOSED OF ACCORDING TO ARTICLE 202.03 AND IS INCLUDED IN THE COST FOR STORM SEWER.
5. REFER TO THE PLANS AND SPECIFICATIONS FOR SURFACE RESTORATION.

SCHEDULE OF QUANTITIES

20100110 TREE REMOVAL (6 TO 15 UNITS DIAMETER)

STATION	OFFSET(FT)	UNIT
160+61.3	215.0 RT	15.00
180+69.1	217.0 RT	15.00
180+69.1	217.0 RT	15.00
180+75.6	201.5 RT	15.00
180+89.3	222.3 RT	15.00
181+09.6	215.5 RT	12.00
181+09.6	215.5 RT	13.00
181+37.0	220.3 RT	6.00
181+37.0	220.3 RT	6.00
181+37.0	220.3 RT	6.00
185+74.8	209.9 RT	6.00
185+74.8	209.9 RT	7.00
185+74.8	209.9 RT	7.00
186+11.3	223.5 RT	8.00
186+11.3	223.5 RT	10.00
186+41.1	232.4 RT	8.00
186+41.1	232.4 RT	8.00
192+64.9	112.2 RT	8.00
192+67.7	125.1 RT	8.00
192+78.0	129.4 RT	7.00
192+93.1	127.7 RT	10.00
193+12.4	125.7 RT	14.00
197+08.2	110.5 RT	8.00
197+08.2	110.5 RT	8.00
198+06.7	100.1 RT	11.00
198+35.3	101.0 RT	6.00
198+35.3	101.0 RT	6.00
198+35.3	101.0 RT	6.00
198+53.9	105.1 RT	14.00
198+53.9	105.1 RT	14.00
198+79.0	128.6 RT	8.00
201+27.6	88.8 RT	8.00
203+99.3	87.4 RT	8.00
	TOTAL =	316

20100210 TREE REMOVAL (OVER 15 UNITS DIAMETER)

STATION	OFFSET(FT)	UNIT
160+19.6	203.2 RT	18.00
160+60.2	200.2 RT	24.00
190+39.5	139.9 RT	16.00
190+27.2	194.6 RT	16.00
190+47.7	168.1 RT	16.00
192+48.8	127.2 RT	17.00
208+32.2	73.9 RT	16.00
	TOTAL =	123

20101100 TREE TRUNK PROTECTION

STATION	OFFSET(FT)	EACH
160+66.7	239.7 RT	1.0
160+77.0	229.8 RT	1.0
181+94.4	132.2 RT	1.0
186+48.4	244.6 RT	1.0
186+98.7	234.9 RT	1.0
189+86.7	91.3 RT	1.0
190+11.1	84.6 RT	1.0
190+25.7	261.5 RT	1.0
190+43.1	229.5 RT	1.0
192+68.5	146.5 RT	1.0
192+99.6	140.8 RT	1.0
193+81.3	124.4 RT	1.0
194+12.7	121.7 RT	1.0
194+19.7	123.3 RT	1.0
194+73.3	104.3 RT	1.0
194+74.9	82.0 RT	1.0
197+25.5	139.2 RT	1.0
197+36.1	68.8 RT	1.0
197+54.1	130.0 RT	1.0
198+13.3	151.0 RT	1.0
201+41.1	115.0 RT	1.0
202+17.7	117.1 RT	1.0
	TOTAL =	22

20800150 TRENCH BACKFILL

STATION	OFFSET(FT)	-	STATION	OFFSET(FT)	CU YD
CTA PARKING LOT					
184+23.9	223.1 RT	-	185+01.6	220.6 RT	323.1
DIA. = 84"	AVG. DEPTH = 15.8'		TABLE, CU YD/FT = 4.153		
SB RIVER ROAD - ADJUSTING WATER MAIN 12					
195+70.8	62.9	-	195+58.3	122.3	42.2
DIA. = 12"	AVG. DEPTH = 5.0'		TABLE, CU YD/FT = 0.696		
NB RIVER ROAD - STORM SEWER, 30"					
196+20.2	77.3 RT	-	196+20.2	93.0 RT	26.1
DIA. = 30"	AVG. DEPTH = 9.2'		TABLE, CU YD/FT = 1.653		
				TOTAL =	391

21101615 TOPSOIL FURNISH AND PLACE, 4"

STATION	WIDTH(FT)	-	STATION	WIDTH(FT)	SQ YD
REFER TO "25000200 SEEDING CL 2" FOR QUANTITY					11,602.1
REFER TO "25200100 SODDING" FOR QUANTITY					10,139.4
				TOTAL =	21,741

21301072 EXPLORATION TRENCH 72" DEPTH

STATION	OFFSET(FT)	-	STATION	OFFSET(FT)	FOOT
171+53.8	273.3 RT	-	171+54.7	288.3 RT	15.0
173+86.0	256.0 RT	-	173+87.0	271.0 RT	15.0
179+81.2	211.9 RT	-	179+82.1	226.9 RT	15.0
ADDITIONAL PROVISIONAL QUANTITY					60.0
				TOTAL =	105

25000200 SEEDING, CLASS 2

STATION	WIDTH(FT)	-	STATION	WIDTH(FT)	ACRE
157+45.0	VARIES	-	163+40.5	VARIES	0.87
164+54.5	VARIES	-	165+03.7	VARIES	0.02
165+10.5	VARIES	-	165+47.2	VARIES	0.02
170+88.0	VARIES	-	171+05.9	VARIES	0.01
174+42.7	VARIES	-	174+63.6	VARIES	0.01
178+25.6	VARIES	-	178+57.5	VARIES	0.02
180+14.5	VARIES	-	184+20.6	VARIES	0.62
185+00.0	VARIES	-	186+78.4	VARIES	0.23
205+67.0	VARIES	-	209+20.3	VARIES	0.56
STABILIZED CONSTRUCTION ENTRANCE #1					0.01
STABILIZED CONSTRUCTION ENTRANCE #2					0.01
STABILIZED CONSTRUCTION ENTRANCE #8					0.01
				TOTAL =	2.40

25100630 EROSION CONTROL BLANKET

STATION	WIDTH(FT)	-	STATION	WIDTH(FT)	SQ YD
REFER TO "25000200 SEEDING CL 2" FOR QUANTITY					11,602.1
				TOTAL =	11,602

25200100 SODDING

STATION	WIDTH(FT)	-	STATION	WIDTH(FT)	SQ YD
188+44.2	VARIES	-	190+35.8	VARIES	2,496.7
191+90.2	VARIES	-	194+80.5	VARIES	2,089.9
196+71.9	VARIES	-	199+74.8	VARIES	2,187.4
200+29.3	VARIES	-	205+09.6	VARIES	3,031.9
STABILIZED CONSTRUCTION ENTRANCE #3					66.7
STABILIZED CONSTRUCTION ENTRANCE #4					66.7
STABILIZED CONSTRUCTION ENTRANCE #5					66.7
STABILIZED CONSTRUCTION ENTRANCE #6					66.7
STABILIZED CONSTRUCTION ENTRANCE #7					66.7
				TOTAL =	10,139

28000305 TEMPORARY DITCH CHECKS

STATION	OFFSET(FT)	-	STATION	OFFSET(FT)	FOOT
162+07.3	152.3 RT				15.0
162+96.7	207.3 RT				15.0
171+33.1	299.6 RT				15.0
174+00.0	280.6 RT				15.0
				TOTAL =	60

28000400 PERIMETER EROSION BARRIER

STATION	OFFSET(FT)	-	STATION	OFFSET(FT)	FOOT
157+44.2	261.7 RT	-	158+73.4	295.9 RT	133.7
158+73.4	295.9 RT	-	160+34.3	187.4 RT	194.0
160+34.3	187.4 RT	-	162+15.8	221.7 RT	184.7
162+31.7	224.1 RT	-	163+46.8	239.4 RT	116.2
157+32.6	307.7 RT	-	159+11.0	340.4 RT	181.4
159+11.0	340.4 RT	-	160+58.0	242.1 RT	176.9
160+58.0	242.1 RT	-	160+82.8	247.2 RT	25.3
160+82.8	247.2 RT	-	163+10.1	364.8 RT	255.9
164+53.8	253.1 RT	-	164+67.0	244.1 RT	15.9
164+67.0	244.1 RT	-	165+05.3	289.3 RT	59.3
165+05.3	289.3 RT	-	164+92.1	298.5 RT	16.1
170+86.9	279.1 RT	-	171+06.9	277.5 RT	20.0
171+06.9	277.5 RT	-	171+08.4	297.5 RT	20.0
171+08.4	297.5 RT	-	170+88.5	299.0 RT	20.0
174+61.5	245.8 RT	-	174+41.6	247.3 RT	20.0
174+41.6	247.3 RT	-	174+43.8	275.6 RT	28.3
174+43.8	275.6 RT	-	174+63.7	274.0 RT	20.0
178+25.5	207.5 RT	-	178+47.8	205.8 RT	22.3
178+47.8	205.8 RT	-	178+58.8	244.4 RT	40.2
178+58.8	244.4 RT	-	178+28.6	247.5 RT	30.3
180+86.7	121.3 RT	-	180+13.5	207.3 RT	112.9
180+13.5	207.3 RT	-	180+15.5	233.3 RT	26.1
180+15.5	233.3 RT	-	181+16.2	227.4 RT	100.9
181+16.2	227.4 RT	-	183+46.6	254.4 RT	232.0
181+85.7	114.0 RT	-	181+91.5	188.5 RT	74.7
181+91.5	188.5 RT	-	183+35.2	204.0 RT	144.5
183+35.2	204.0 RT	-	184+21.6	198.9 RT	86.6
183+68.3	254.1 RT	-	184+21.1	253.3 RT	52.8
184+99.4	245.2 RT	-	186+79.4	234.7 RT	180.4
185+46.7	163.5 RT	-	186+33.7	202.5 RT	95.3
186+33.7	202.5 RT	-	186+78.3	201.1 RT	44.7
188+47.2	217.8 RT	-	189+01.9	274.3 RT	78.7
189+01.9	274.3 RT	-	190+16.2	273.1 RT	114.2
191+89.2	117.8 RT	-	191+93.5	149.9 RT	32.4
191+93.5	149.9 RT	-	193+55.6	138.0 RT	162.6
193+55.6	138.0 RT	-	193+69.2	122.3 RT	20.8
193+69.2	122.3 RT	-	194+80.5	121.5 RT	111.3
194+80.5	121.5 RT	-	195+18.3	112.9 RT	38.9
196+70.8	62.3 RT	-	196+71.2	112.7 RT	50.5
196+71.2	112.7 RT	-	197+19.3	160.2 RT	67.5
197+19.3	160.2 RT	-	199+50.1	157.8 RT	230.9
199+50.1	157.8 RT	-	199+75.6	120.3 RT	45.3
200+01.6	90.8 RT	-	200+27.1	90.5 RT	25.5
200+27.1	90.5 RT	-	200+64.3	126.9 RT	52.0
200+64.3	126.9 RT	-	204+98.6	124.1 RT	434.4
204+98.6	124.1 RT	-	205+34.4	87.6 RT	51.1
205+34.4	87.6 RT	-	205+79.8	87.1 RT	45.4
205+66.0	160.8 RT	-	205+66.8	243.9 RT	83.1
205+66.8	243.9 RT	-	206+68.2	242.8 RT	101.4
206+68.2	242.8 RT	-	206+67.3	157.9 RT	84.9
206+67.3	157.9 RT	-	207+02.7	128.4 RT	46.0
207+02.7	128.4 RT	-	208+52.1	126.9 RT	149.4
208+52.1	126.9 RT	-	208+52.1	133.0 RT	6.1
208+52.1	133.0 RT	-	209+21.8	132.3 RT	69.7
209+21.8	132.3 RT	-	209+21.0	53.9 RT	78.3
				TOTAL =	4,912

28000510 INLET FILTERS

STATION	OFFSET(FT)	EACH
162+65.2	181.0 RT	1.0
163+13.4	339.6 RT	1.0
163+38.1	266.5 RT	1.0
178+55.4	247.0 RT	1.0
183+68.4	273.9 RT	1.0
186+15.6	186.1 RT	1.0
189+77.6	143.4 RT	1.0
	TOTAL =	7

35501316 HOT-MIX ASPHALT BASE COURSE, 8"

STATION	WIDTH(FT)	-	STATION	WIDTH(FT)	SQ YD
184+23.9	13.3	-	185+01.6	13.3	114.9
				TOTAL =	115

40603340 HOT-MIX ASPHALT SURFACE COURSE, MIX "D", N70

STATION	WIDTH(FT)	-	STATION	WIDTH(FT)	TON
RATE =	112.00	POUND / SQ YD / INCH			
DEPTH =	2.00	INCH			
CTA PARKING LOT					
184+23.9	13.3	-	185+01.6	13.3	12.9
PATCHING					
195+54.8	6.0	-	195+72.8	6.0	4.8
195+77.5	15.0	-	195+82.9	15.0	1.0
196+08.8	12.0	-	196+27.1	12.0	5.2
196+31.5	15.0	-	196+36.5	15.0	0.9
				TOTAL =	25

44000100 PAVEMENT REMOVAL

STATION	WIDTH(FT)	-	STATION	WIDTH(FT)	SQ YD
REFER TO "35501316 HMA BASE CSE 8" FOR QUANTITY					114.9
				TOTAL =	115

SCHEDULE OF QUANTITIES

44201765 CLASS D PATCHES, TYPE II, 10 INCH

STATION	WIDTH(FT)	-	STATION	WIDTH(FT)	SQ YD
195+77.5	15.0	-	195+82.5	15.0	8.3
196+31.5	15.0	-	196+36.5	15.0	8.3
				TOTAL =	17

44201771 CLASS D PATCHES, TYPE IV, 10 INCH

STATION	WIDTH(FT)	-	STATION	WIDTH(FT)	SQ YD
195+54.8	6.0	-	195+72.8	6.0	42.6
196+15.4	35.0	-	196+27.4	35.0	46.9
				TOTAL =	89

54248510 CONCRETE COLLAR

STATION	OFFSET(FT)	CU YD
156+67.8	112.7 RT	2.5
157+32.4	271.6 RT	2.5
157+29.6	182.3 RT	2.1
160+52.7	221.5 RT	2.1
182+68.9	219.7 RT	2.1
186+76.2	214.9 RT	2.5
188+75.9	179.5 RT	2.5
190+38.9	147.0 RT	3.0
	TOTAL =	19.3

55102300 STORM SEWER REMOVAL 72"

STATION	OFFSET(FT)	-	STATION	OFFSET(FT)	FOOT
157+59.4	142.8 RT	-	160+53.2	221.7 RT	304.2
182+69.8	219.6 RT	-	183+66.0	214.0 RT	96.4
				TOTAL =	401

55102500 STORM SEWER REMOVAL 84"

STATION	OFFSET(FT)	-	STATION	OFFSET(FT)	FOOT
156+67.8	112.7 RT	-	157+24.4	131.3 RT	59.6
188+75.9	179.5 RT	-	190+20.5	167.6 RT	145.1
208+80.1	107.6 RT	-	208+90.1	107.4 RT	10.0
				TOTAL =	215

60257900 MANHOLES TO BE RECONSTRUCTED

STATION	OFFSET(FT)	EACH
163+32.5	267.9 RT	1.0
	TOTAL =	1

60500040 REMOVING MANHOLES

STATION	OFFSET(FT)	EACH
165+38.8	280.2 RT	1.0
189+87.8	142.8 RT	1.0
	TOTAL =	2

66400105 CHAIN LINK FENCE, 4'

STATION	OFFSET(FT)	-	STATION	OFFSET(FT)	FOOT
183+49.9	251.7 RT	-	183+73.9	251.5 RT	24.0
184+23.4	197.1 RT	-	184+23.4	251.0 RT	54.0
185+02.2	196.5 RT	-	185+01.7	247.8 RT	51.2
208+71.8	49.6 RT	-	208+73.5	117.4 RT	67.8
208+73.5	117.4 RT	-	208+82.3	117.4 RT	8.7
				TOTAL =	206

66400305 CHAIN LINK FENCE, 6'

STATION	OFFSET(FT)	-	STATION	OFFSET(FT)	FOOT
160+15.2	219.0 RT	-	160+36.0	226.6 RT	22.2
160+36.0	226.6 RT	-	160+50.0	234.9 RT	16.2
				TOTAL =	38

56106600 ADJUSTING WATER MAIN 12"

STATION	OFFSET(FT)	-	STATION	OFFSET(FT)	FOOT
195+70.4	64.9 RT	-	195+58.3	123.6 RT	60.0
				TOTAL =	60

X0323389 STORM SEWER CONNECTION

STATION	OFFSET(FT)	EACH
163+39.9	273.0 RT	1.0
164+77.3	265.7 RT	1.0
165+39.5	272.8 RT	1.0
178+44.4	224.7 RT	1.0
189+82.6	149.4 RT	1.0
196+20.2	93.0 RT	1.0
198+44.5	88.6 RT	1.0
201+94.5	89.4 RT	1.0
207+91.6	84.7 RT	1.0
	TOTAL =	9

X6022402 MANHOLES, TYPE A, 4'-DIAMETER, TYPE 1 FRAME, CLOSED LID, SPECIAL

STATION	OFFSET(FT)	EACH
INSTALLED ON PIPE TEE		
156+71.6	113.9 RT	1.0
157+05.4	159.5 RT	1.0
158+95.3	302.3 RT	1.0
158+98.2	314.0 RT	1.0
160+41.6	225.5 RT	1.0
160+47.2	207.6 RT	1.0
163+27.0	248.1 RT	1.0
182+27.4	203.1 RT	1.0
182+72.9	219.5 RT	1.0
186+68.2	215.2 RT	1.0
188+79.9	179.2 RT	1.0
188+83.1	197.6 RT	1.0
198+36.6	96.4 RT	1.0
201+86.5	94.1 RT	1.0
205+00.0	91.3 RT	1.0
207+83.7	88.4 RT	1.0
INSTALLED OVER STORM SEWER JACKED-IN-PLACE		
165+30.2	276.0 RT	1.0
171+00.0	285.1 RT	1.0
174+55.0	258.3 RT	1.0
178+36.7	229.4 RT	1.0
	TOTAL =	20

X6640300 CHAIN LINK FENCE REMOVAL

STATION	OFFSET(FT)	-	STATION	OFFSET(FT)	FOOT
REFER TO "66400105 CH LK FENCE 4" FOR QUANTITY					205.7
REFER TO "66400305 CH LK FENCE 6" FOR QUANTITY					38.4
				TOTAL =	244

Z0013797 STABILIZED CONSTRUCTION ENTRANCE

STATION	WIDTH(FT)	-	STATION	WIDTH(FT)	SQ YD
STABILIZED CONSTRUCTION ENTRANCE #1					70.0
STABILIZED CONSTRUCTION ENTRANCE #2					70.0
STABILIZED CONSTRUCTION ENTRANCE #3					70.0
STABILIZED CONSTRUCTION ENTRANCE #4					70.0
STABILIZED CONSTRUCTION ENTRANCE #5					70.0
STABILIZED CONSTRUCTION ENTRANCE #6					70.0
STABILIZED CONSTRUCTION ENTRANCE #7					70.0
STABILIZED CONSTRUCTION ENTRANCE #8					70.0
				TOTAL =	560

REINFORCED CONCRETE PIPE TEE, 72" PIPE WITH 48" RISER

STATION	OFFSET(FT)	EACH
158+98.2	314.0 RT	1.0
160+41.6	225.5 RT	1.0
182+72.9	219.5 RT	1.0
	TOTAL =	3

REINFORCED CONCRETE PIPE TEE, 84" PIPE WITH 48" RISER

STATION	OFFSET(FT)	EACH
156+71.6	113.9 RT	1.0
157+05.4	159.5 RT	1.0
158+95.3	302.3 RT	1.0
160+47.2	207.6 RT	1.0
163+27.0	248.1 RT	1.0
182+27.4	203.1 RT	1.0
186+68.2	215.2 RT	1.0
188+83.1	198.0 RT	1.0
188+79.9	179.2 RT	1.0
	TOTAL =	9

REINFORCED CONCRETE PIPE TEE, 96" PIPE WITH 48" RISER

STATION	OFFSET(FT)	EACH
198+36.6	96.4 RT	1.0
201+86.5	94.1 RT	1.0
205+00.0	91.3 RT	1.0
207+83.7	88.4 RT	1.0
	TOTAL =	4

FILE NAME = g:\pr-proj\c12\2102155.011\cadd\civil\sht\0160F90-26sht-schedule.dgn

ENTRAN

USER NAME = 2bookd	DESIGNED - DJB	REVISED -	
	DRAWN - ENTRAN	REVISED -	
PLOT SCALE = 50.00 ' / IN.	CHECKED - DAK	REVISED -	
PLOT DATE = 10/25/2011	DATE - 09/07/11	REVISED -	

STATE OF ILLINOIS
DEPARTMENT OF TRANSPORTATION

PUMP STATION 24 STORM SEWER IMPROVEMENTS
SCHEDULE OF QUANTITIES

SCALE: 50.00 ' / IN. | SHEET NO. OF SHEETS | STA. TO STA.

F.A.I. RTE.	SECTION	COUNTY	TOTAL SHEETS	SHEET NO.
190	0102.5-T	COOK	41	7
		CONTRACT NO. 60F90		

FED. ROAD DIST. NO. 1 | ILLINOIS | FED. AID PROJECT

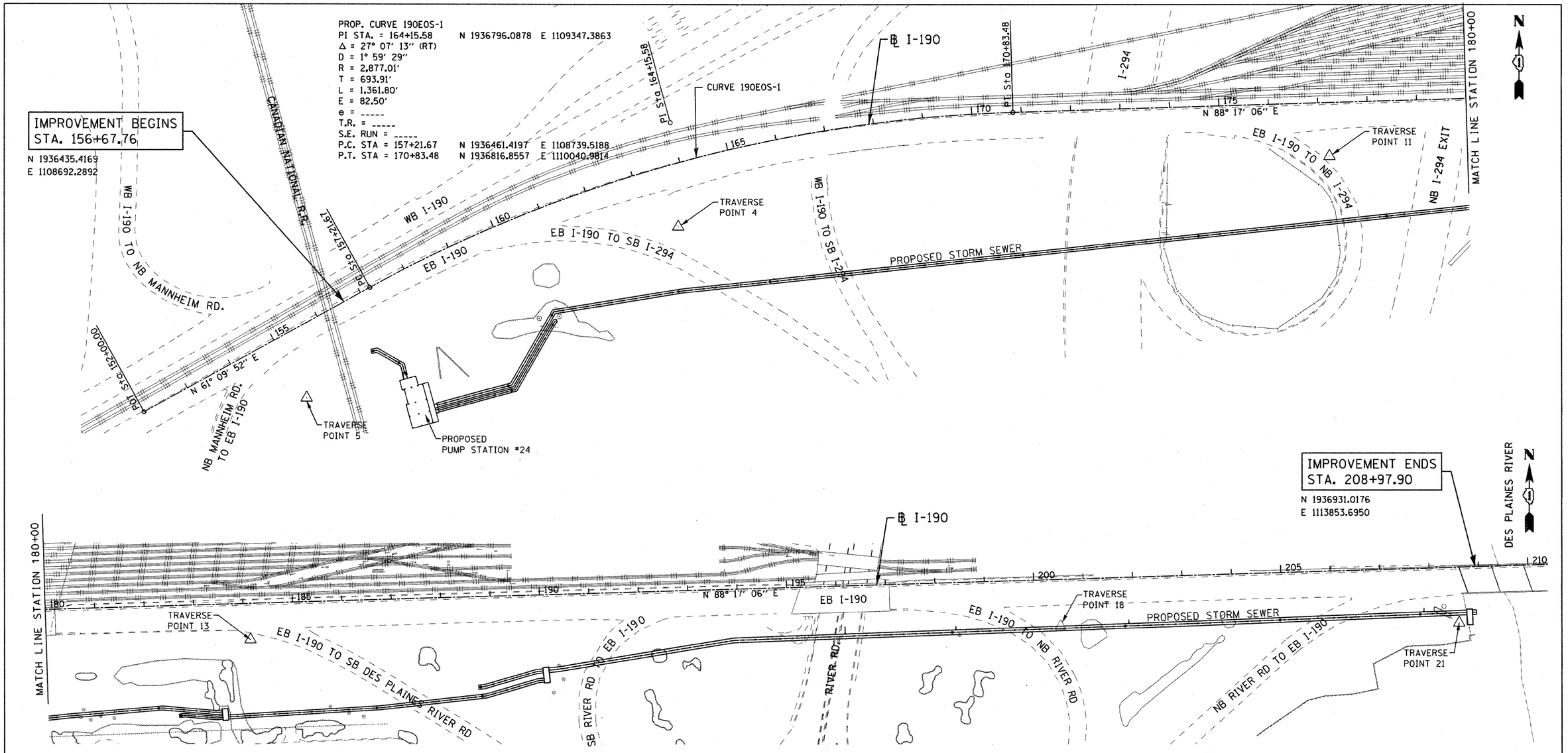

FILE NAME = g:\projects\2102155.011\cadd\civil\sht\0162F90-09sht-ATB01.dgn

ENTRAN	USER NAME = 2bookd	DESIGNED - DJB	REVISED -	STATE OF ILLINOIS DEPARTMENT OF TRANSPORTATION	PUMP STATION 24 STORM SEWER IMPROVEMENTS ALIGNMENT, TIES & BENCHMARKS	F.A.I. RTE.	SECTION	COUNTY	TOTAL SHEETS / SHEET NO.
		DRAWN - ENTRAN	REVISED -			190	0102.5-T	COOK	41 / 8
	PLOT SCALE = 100.00 ′ / IN.	CHECKED - DAK	REVISED -					CONTRACT NO. 60F90	
	PLOT DATE = 9/7/2011	DATE - 09/07/11	REVISED -		SCALE: 100.00 ′ / IN. SHEET NO. OF SHEETS STA. TO STA.	FED. ROAD DIST. NO. 1	ILLINOIS	FED. AID PROJECT	

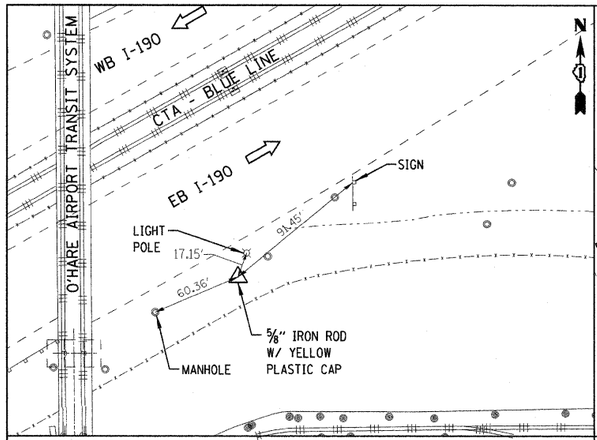

TRAVERSE POINT #100
N 1935294.5774
E 1106816.3744
STA N/A , OFFSET N/A

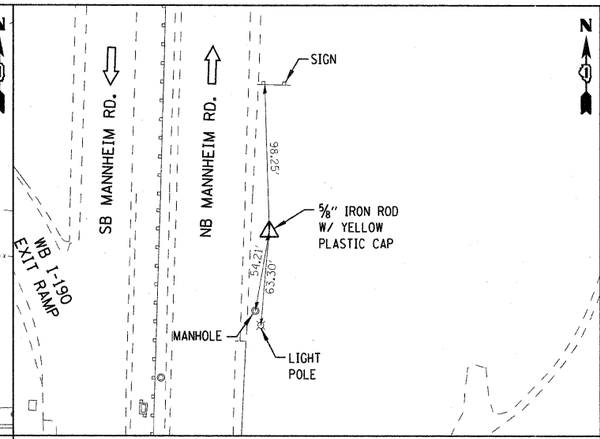

TRAVERSE POINT #103
N 1936331.2083
E 1107900.4522
STA N/A , OFFSET N/A

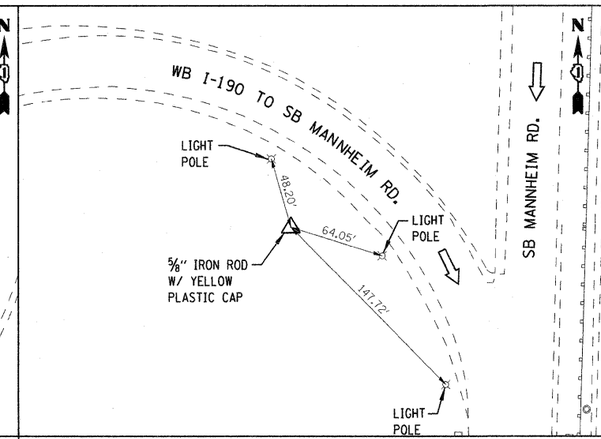

TRAVERSE POINT #104
N 1936354.9433
E 1107629.5577
STA N/A , OFFSET N/A

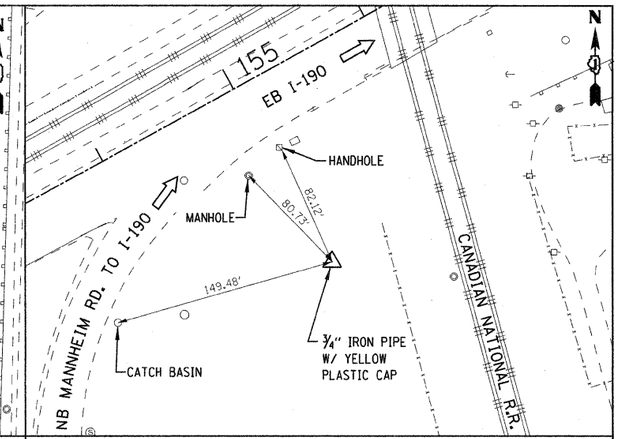

TRAVERSE POINT #5
N 1936242.7000
E 1108615.7350
STA 155+07.75, OFFSET 131.90' RT EL= 639.99

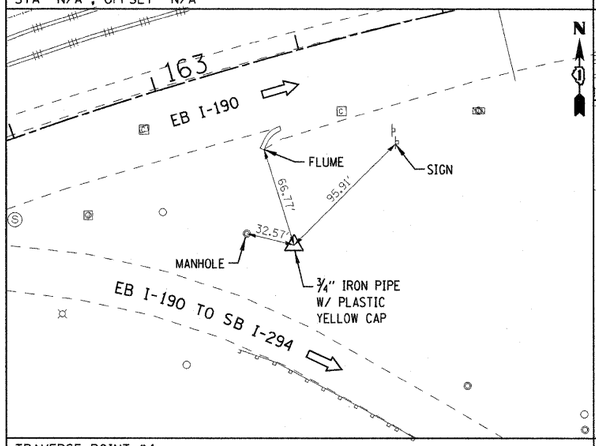

TRAVERSE POINT #4
N 1936589.2600
E 1109367.7670
STA 163+66.20, OFFSET 122.17' RT EL= 638.26

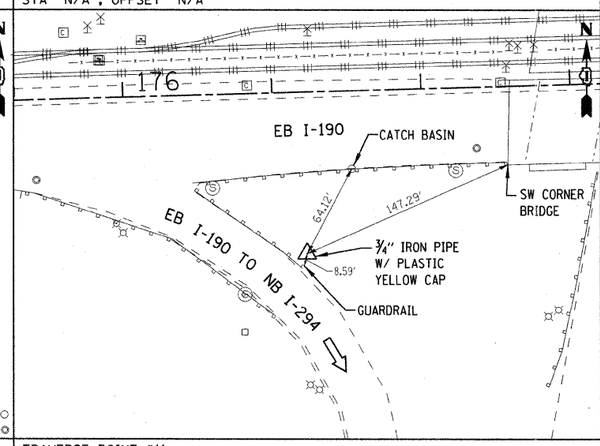

TRAVERSE POINT #11
N 1936732.0700
E 1110685.2430
STA 177+24.91, OFFSET 104.03' RT EL= 657.40

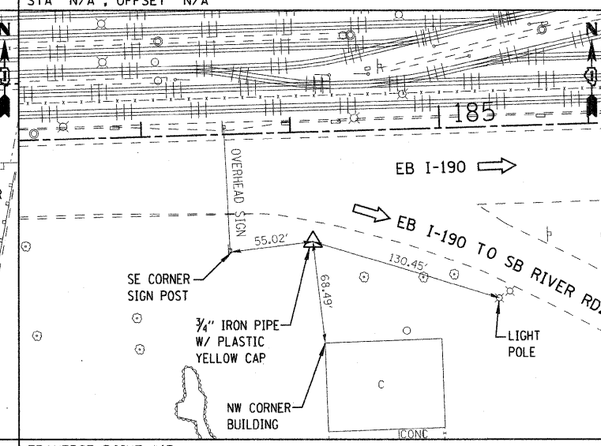

TRAVERSE POINT #13
N 1936787.4920
E 1111376.4130
STA 184+17.43, OFFSET 69.32' RT EL= 646.56

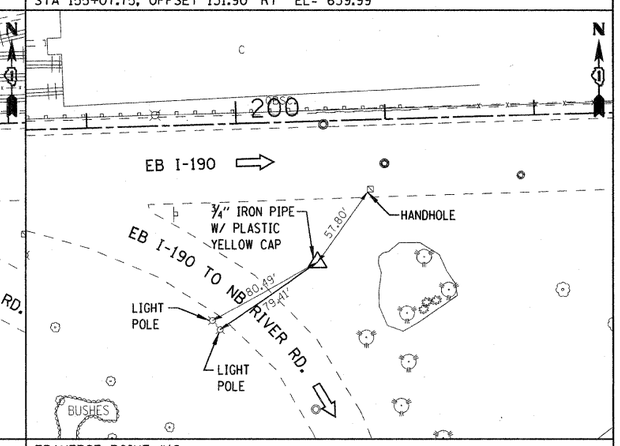

TRAVERSE POINT #18
N 1936815.4790
E 1113015.1150
STA 200+56.24, OFFSET 90.39' RT EL= 646.31

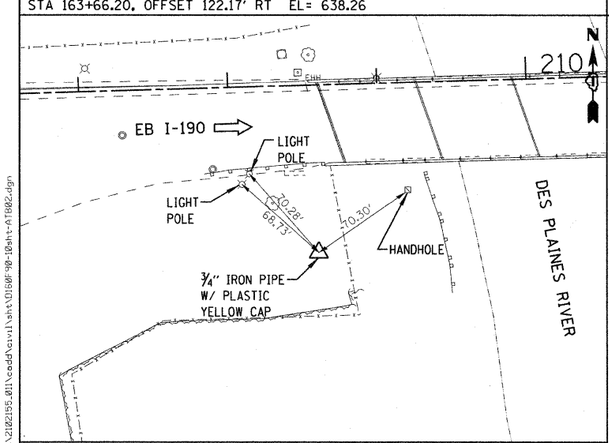

TRAVERSE POINT #21
N 1936822.1170
E 1113821.2200
STA 208+62.18, OFFSET 107.88' RT EL= 626.89

BENCHMARK

BM-1 CUT "□" IN THE SOUTHEAST CORNER OF SOUTH CONCRETE ABUTMENT OF CANADIAN NATIONAL RAILROAD BRIDGE OVER I-190.
ELEV. = 643.99

BM-2 CUT "□" ON EXISTING STORM SEWER HEADWALL AT DES PLAINES RIVER.
ELEV. = 621.89

NOTE:
VERTICAL AND HORIZONTAL CONTROL
NAVD 1988 DATUM PER GPS VRS NETWORK

NORTHING AND EASTING COORDINATES ARE NOT IN STATE PLANE COORDINATE SYSTEM

FILE NAME = g:\projects\2122155.011\cadd\civil\sht\0190-98-10sht-ht1802.dgn

ENTRAN	USER NAME = 2bookd	DESIGNED - DJB	REVISED -	STATE OF ILLINOIS DEPARTMENT OF TRANSPORTATION	PUMP STATION 24 STORM SEWER IMPROVEMENTS ALIGNMENT, TIES & BENCHMARKS	F.A.I. RTE.	SECTION	COUNTY	TOTAL SHEETS / SHEET NO.
		DRAWN - ENTRAN	REVISED -			190	0102.5-T	COOK	41 / 9
	PLOT SCALE = 100.00 ' / IN.	CHECKED - DAK	REVISED -					CONTRACT NO. 60F90	
	PLOT DATE = 9/7/2011	DATE - 09/07/11	REVISED -		SCALE: 100.00 ' / IN. SHEET NO. OF SHEETS STA. TO STA.	FED. ROAD DIST. NO. 1	ILLINOIS	FED. AID PROJECT	

CTA BLUE LINE

155+00

160+00

165+00

℄ I-190

STORM SEWER REM 84

EXISTING PUMP STATION
(REMOVED BY OTHERS)

STORM SEWER REM 72

TREE REMOVAL (TYP.)

EXIST. R.O.W.

BEGIN IMPROVEMENT
STA. 156+67.76

UNDER
SEPARATE
CONTRACT

STORM SEWER REM 27

ELECTRICAL SUBSTATION
REMOVED BY OTHERS.
COORDINATE WITH PROVIDER

CH LK FENCE REMOV

PUMP STATION BY OTHERS
COORDINATE WITH CONTRACTOR

EASEMENT (TYP.)

CANADIAN NATIONAL R.R.

EXIST. R.O.W.

EXISTING SEWER CONNECTION
TO BE ABANDONED AND PLUGGED
(SEE DETAIL)

I-294 SB RAMP

I-294 SB RAMP

MATCH LINE STATION 167+00

STORM SEWER REM 15

REMOV MANHOLES

EXISTING SEWER CONNECTION
TO BE ABANDONED AND PLUGGED
(SEE DETAIL)

N

MATCH LINE STATION 167+00

170+00

175+00

180+00

℄ I-190

CTA BLUE LINE

I-294 NB EXIT
TO I-90

MATCH LINE STATION 182+00

N

℄ I-294

STORM SEWER REM 12

TREE REMOVAL (TYP.)

EXISTING SEWER CONNECTION
TO BE ABANDONED AND PLUGGED
(SEE DETAIL)

EXIST. R.O.W.

EXIST. R.O.W.

LEGEND

PAVEMENT REMOVAL

LINEAR REMOVAL ITEM

X TREE REMOVAL

• SEE SCHEDULE OF QUANTITIES FOR STATION / OFFSETS

FILE NAME = G:\projects\2102155.011\CADD\Civil\Sht\U160F90-24sht-rem01.dgn

ENTRAN	USER NAME = 2bookd	DESIGNED - DJB	REVISED -
		DRAWN - ENTRAN	REVISED -
	PLOT SCALE = 50.00 ' / IN.	CHECKED - DAK	REVISED -
	PLOT DATE = 10/11/2011	DATE - 09/07/11	REVISED -

STATE OF ILLINOIS
DEPARTMENT OF TRANSPORTATION

PUMP STATION 24 STORM SEWER IMPROVEMENTS
REMOVAL PLAN

SCALE: 50.00 ' / IN. | SHEET NO. OF SHEETS | STA. TO STA.

F.A.I. RTE.	SECTION	COUNTY	TOTAL SHEETS	SHEET NO.
190	0102.5-T	COOK	41	10
		CONTRACT NO. 60F90		

FED. ROAD DIST. NO. 1 | ILLINOIS | FED. AID PROJECT

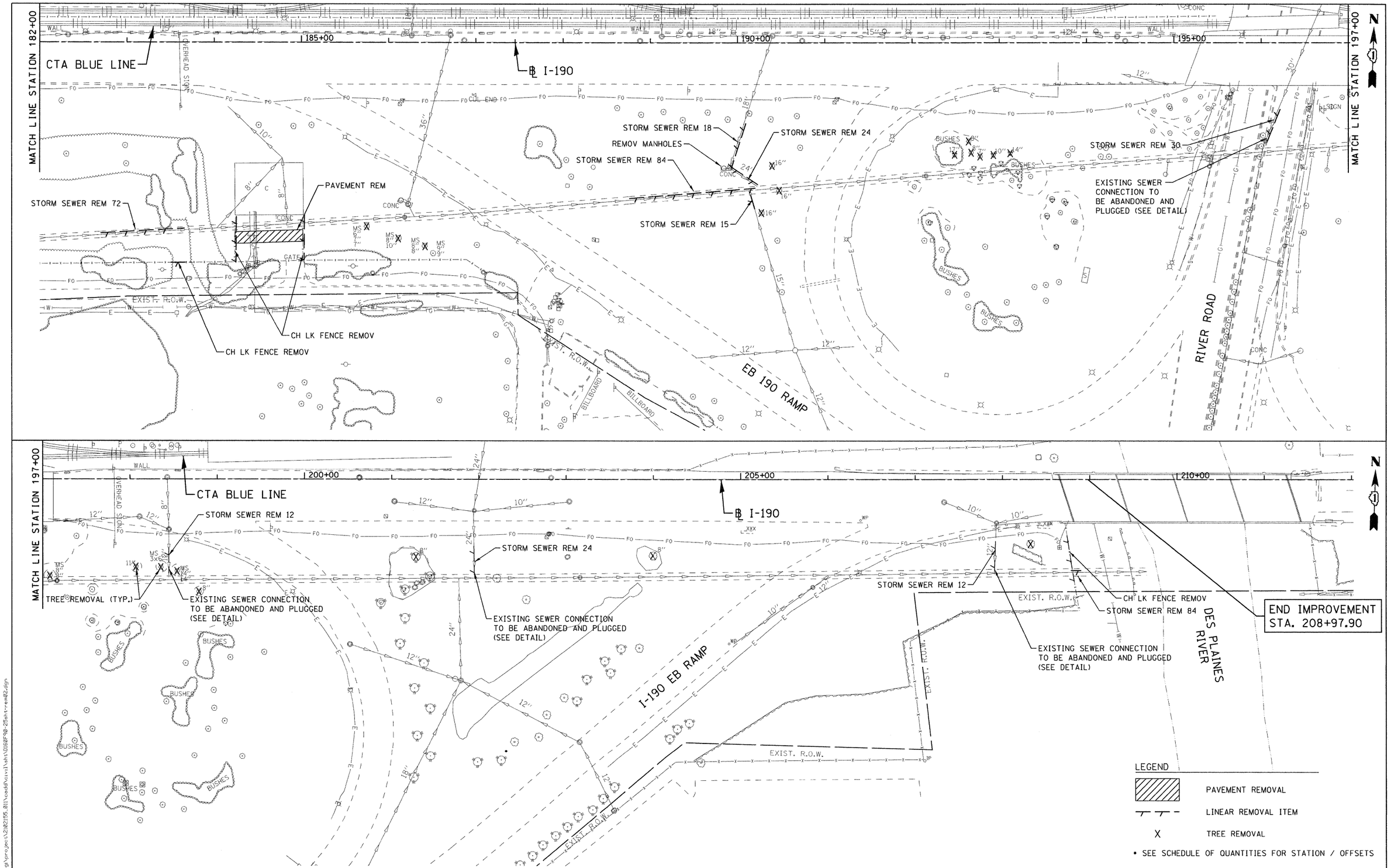

FILE NAME = g:\projects\2102155.01\cadd\civil\sh\0160F90-25sht-rem02.dgn

ENTRAN

USER NAME = 2bookd	DESIGNED - DJB	REVISED -	
	DRAWN - ENTRAN	REVISED -	
PLOT SCALE = 50.00 ft / IN.	CHECKED - DAK	REVISED -	
PLOT DATE = 10/11/2011	DATE - 09/07/11	REVISED -	

STATE OF ILLINOIS
DEPARTMENT OF TRANSPORTATION

PUMP STATION 24 STORM SEWER IMPROVEMENTS
REMOVAL PLAN

SCALE: 50.00 ft / IN. SHEET NO. OF SHEETS STA. TO STA.

F.A.I. RTE.	SECTION	COUNTY	TOTAL SHEETS	SHEET NO.
190	0102.5-T	COOK	41	11
		CONTRACT NO. 60F90		

FED. ROAD DIST. NO. 1 ILLINOIS FED. AID PROJECT

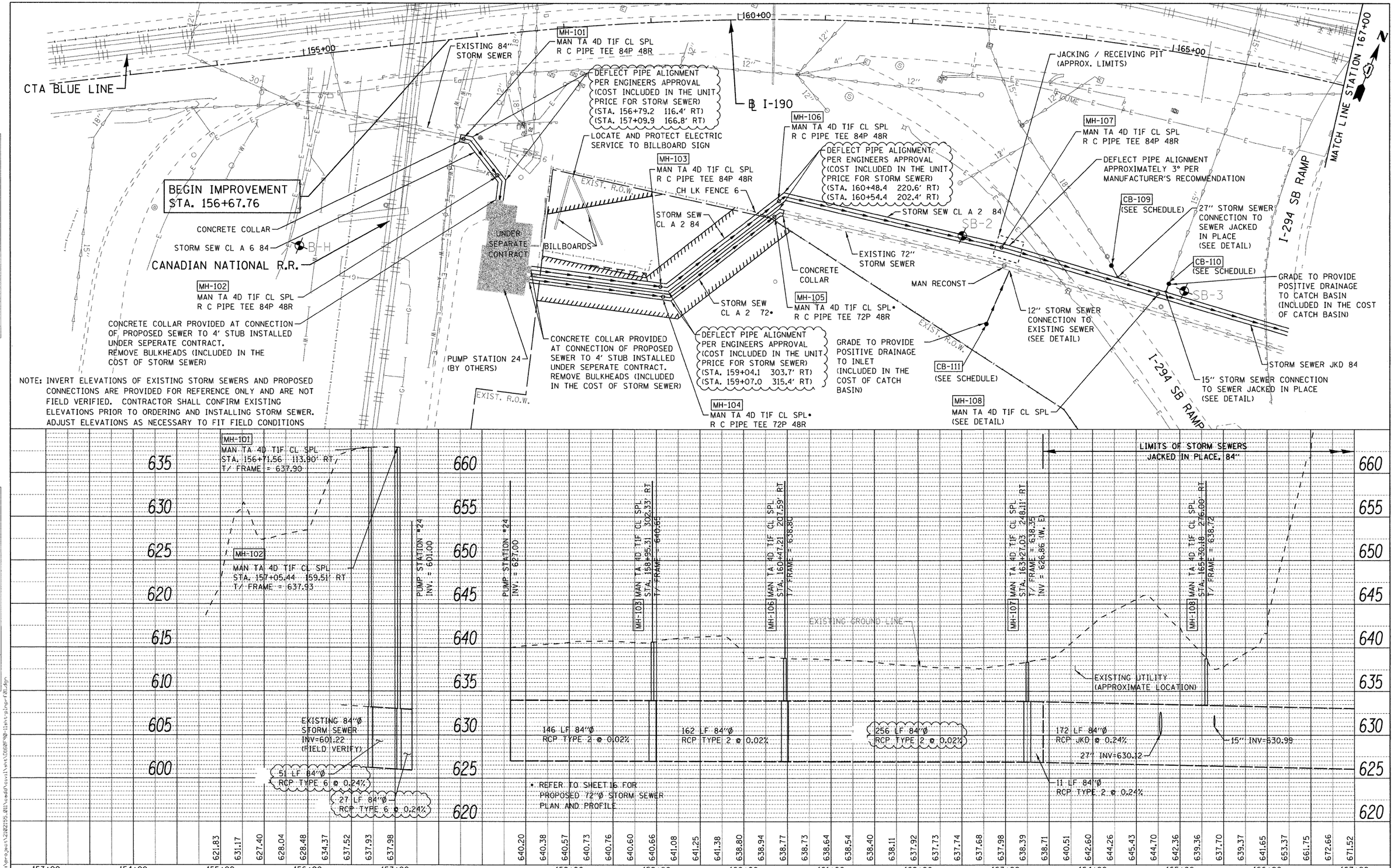

PLAN		BY	DATE
SURVEYED			
PLOTTED			
ALIGNMENT CHECKED			
RT. OF WAY CHECKED			
CADD FILE NAME			
NOTE BOOK			
NO.			

PROFILE		BY	DATE
SURVEYED			
PLOTTED			
GRADES CHECKED			
BLM NOTED			
STRUCTURE NOTATIONS CHKD			
NOTE BOOK			
NO.			

FILE NAME = g:\projects\2102155.001\cadd\civil\sht\D160F90-ilsht-plnprf01.dgn

ENTRAN

USER NAME = 2bookd	DESIGNED - DJB	REVISED -	
	DRAWN - ENTRAN	REVISED -	
PLOT SCALE = 50.00 ft / IN.	CHECKED - DAK	REVISED -	
PLOT DATE = 10/25/2011	DATE - 09/07/11	REVISED -	

STATE OF ILLINOIS
DEPARTMENT OF TRANSPORTATION

PUMP STATION 24 STORM SEWER IMPROVEMENTS
STORM SEWER PLAN AND PROFILE

SCALE: 50.00 ft / IN. SHEET NO. OF SHEETS STA. TO STA.

F.A.I. RTE.	SECTION	COUNTY	TOTAL SHEETS	SHEET NO.
190	0102.5-T	COOK	41	12
		CONTRACT NO. 60F90		
FED. ROAD DIST. NO. 1	ILLINOIS	FED. AID PROJECT		

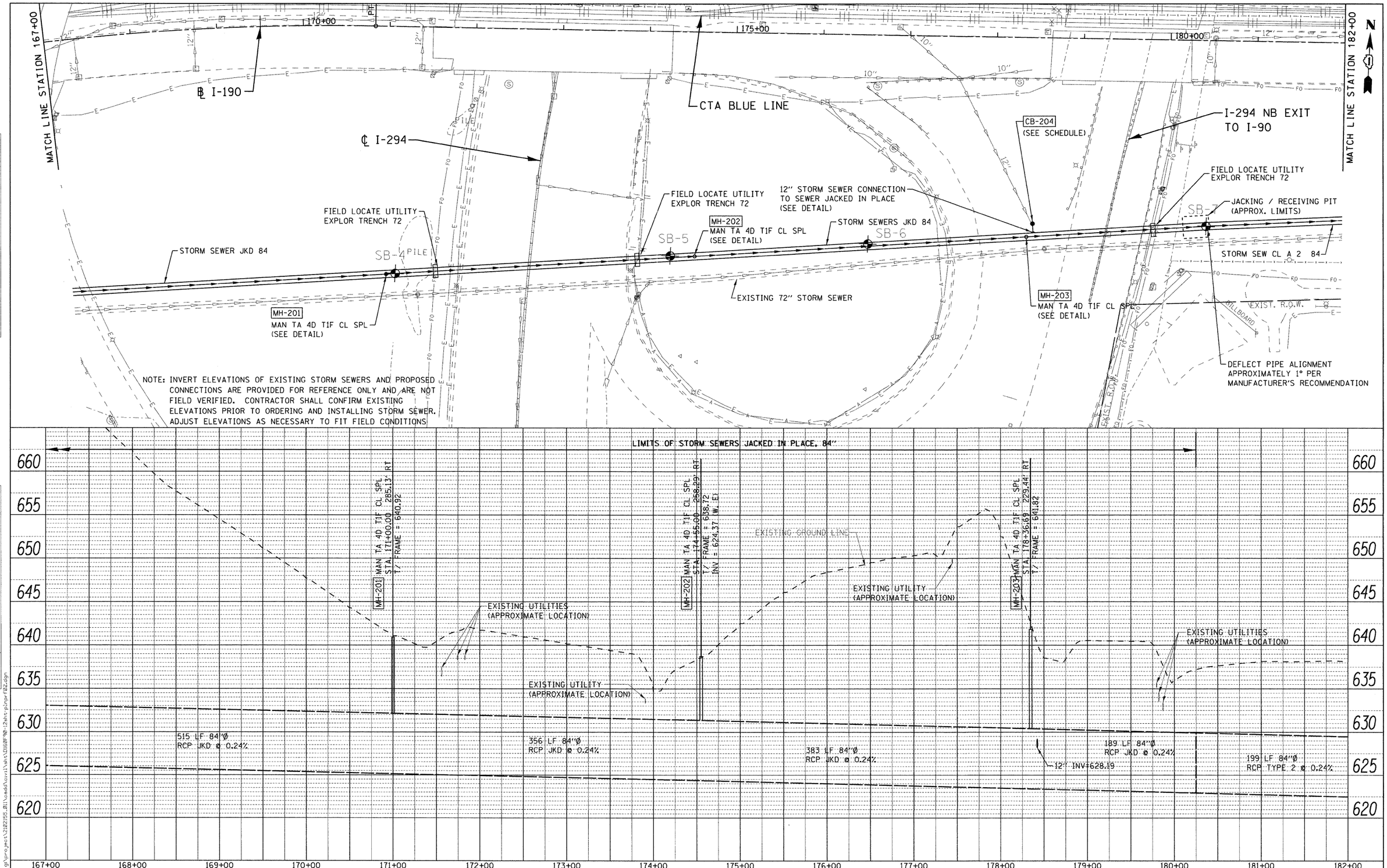

PLAN — SURVEYED / PLOTTED / ALIGNMENT CHECKED / R.O.W. CHECKED / CADD FILE NAME — NOTE BOOK NO. — DATE

PROFILE — SURVEYED / PLOTTED / GRADES CHECKED / R.O.W. CHECKED / STRUCTURE NO(S)/TYPE(S) CHKD — NOTE BOOK NO. — BY — DATE

FILE NAME = g:\proj\ms\2102152.dll\cadd\civil\sh\D160F90-12sht-p1pr22.dgn

ENTRAN	USER NAME = 2bookd	DESIGNED - DJB	REVISED -	STATE OF ILLINOIS DEPARTMENT OF TRANSPORTATION	PUMP STATION 24 STORM SEWER IMPROVEMENTS STORM SEWER PLAN AND PROFILE
		DRAWN - ENTRAN	REVISED -		
	PLOT SCALE = 50.00 ft. / IN.	CHECKED - DAK	REVISED -		
	PLOT DATE = 10/11/2011	DATE - 09/07/11	REVISED -		SCALE: 50.00 ft / IN. SHEET NO. OF SHEETS STA. TO STA.

F.A.I. RTE.	SECTION	COUNTY	TOTAL SHEETS	SHEET NO.
190	0102.5-T	COOK	41	13

CONTRACT NO. 60F90

FED. ROAD DIST. NO. 1 | ILLINOIS | FED. AID PROJECT

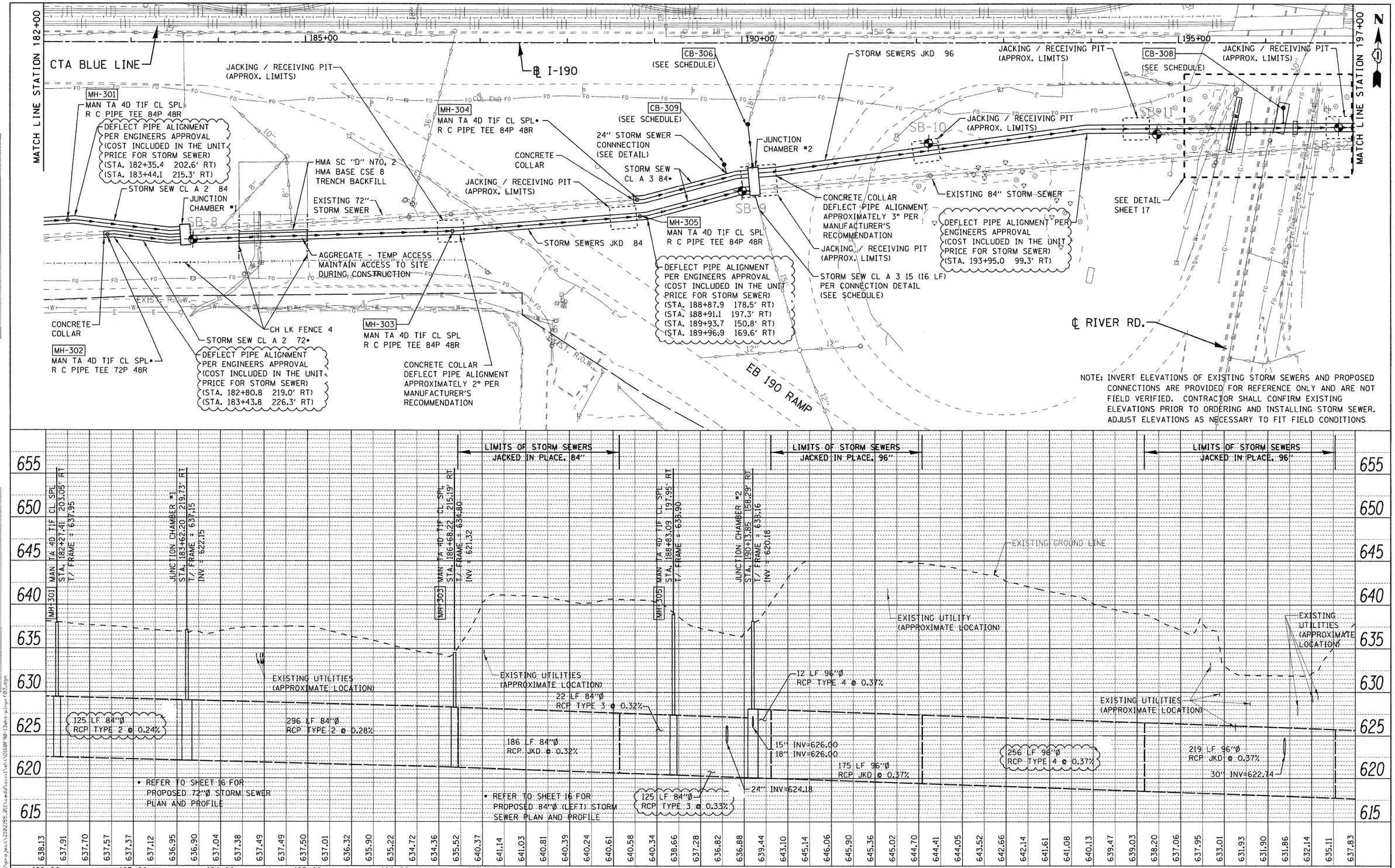

PLAN — SURVEYED / PLOTTED / ALIGNMENT CHECKED / RT. OF WAY CHECKED / CADD FILE NAME — NOTE BOOK NO. — BY — DATE

PROFILE — SURVEYED / PLOTTED / GRADES CHECKED / B.M. NOTED / STRUCTURE NOTATNS CHKD — NOTE BOOK NO. — BY — DATE

FILE NAME = g:\Projects\2102155.01\cadd\civil\sh\D160F90-13sht-plnprf03.dgn

ENTRAN

USER NAME = 2bookd	DESIGNED - DJB	REVISED -	
	DRAWN - ENTRAN	REVISED -	
PLOT SCALE = 50.00 ft / IN.	CHECKED - DAK	REVISED -	
PLOT DATE = 10/25/2011	DATE - 09/07/11	REVISED -	

STATE OF ILLINOIS
DEPARTMENT OF TRANSPORTATION

PUMP STATION 24 STORM SEWER IMPROVEMENT
STORM SEWER PLAN AND PROFILE

SCALE: 50.00 ft / IN. SHEET NO. OF SHEETS STA. TO STA.

F.A.I. RTE.	SECTION	COUNTY	TOTAL SHEETS	SHEET NO.
190	0102.5-T	COOK	41	14
		CONTRACT NO. 60F90		

FED. ROAD DIST. NO. 1 | ILLINOIS | FED. AID PROJECT

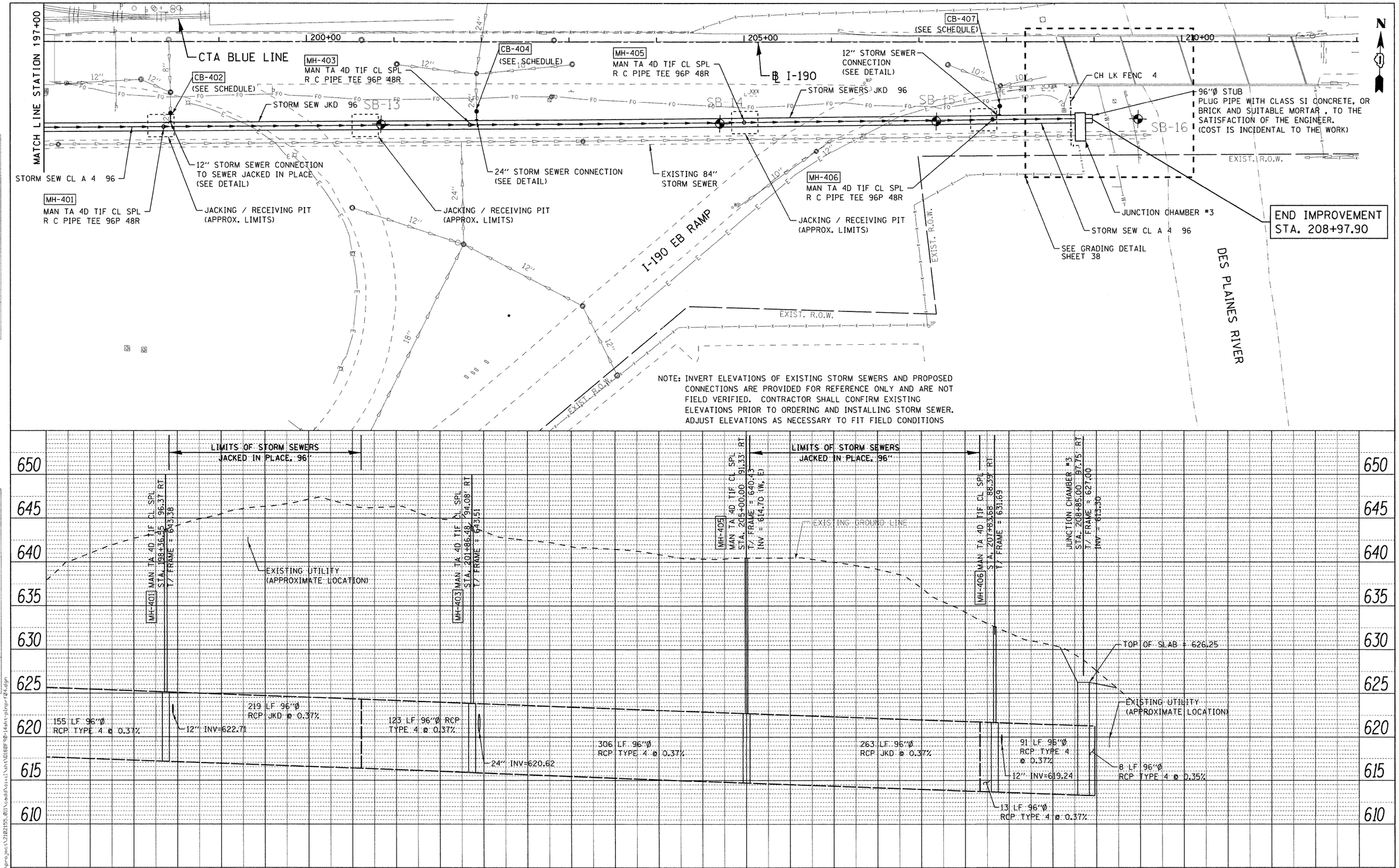

PLAN
NOTE BOOK NO.
SURVEYED
PLOTTED
ALIGNMENT CHECKED
RT. OF WAY CHECKED
CADD FILE NAME
DATE

PROFILE
NOTE BOOK NO.
SURVEYED
PLOTTED
GRADES CHECKED
B.M. NGVD
STRUCTURE NOTAT'NS CH'KD
BY
DATE

FILE NAME = g:\project\2102155.011\cadd\civil\sht\DIGF-90-14sht-plnpr-F04.dgn

ENTRAN

USER NAME = 2bookd	DESIGNED - DJB	REVISED -	
	DRAWN - ENTRAN	REVISED -	
PLOT SCALE = 50.00 ft / IN.	CHECKED - DAK	REVISED -	
PLOT DATE = 10/11/2011	DATE - 09/07/11	REVISED -	

STATE OF ILLINOIS
DEPARTMENT OF TRANSPORTATION

PUMP STATION 24 STORM SEWER IMPROVEMENT
STORM SEWER PLAN AND PROFILE

SCALE: 50.00 ft / IN. SHEET NO. OF SHEETS STA. TO STA.

F.A.I. RTE.	SECTION	COUNTY	TOTAL SHEETS	SHEET NO.
190	0102.5-T	COOK	41	15
		CONTRACT NO. 60F90		

FED. ROAD DIST. NO. 1 ILLINOIS FED. AID PROJECT

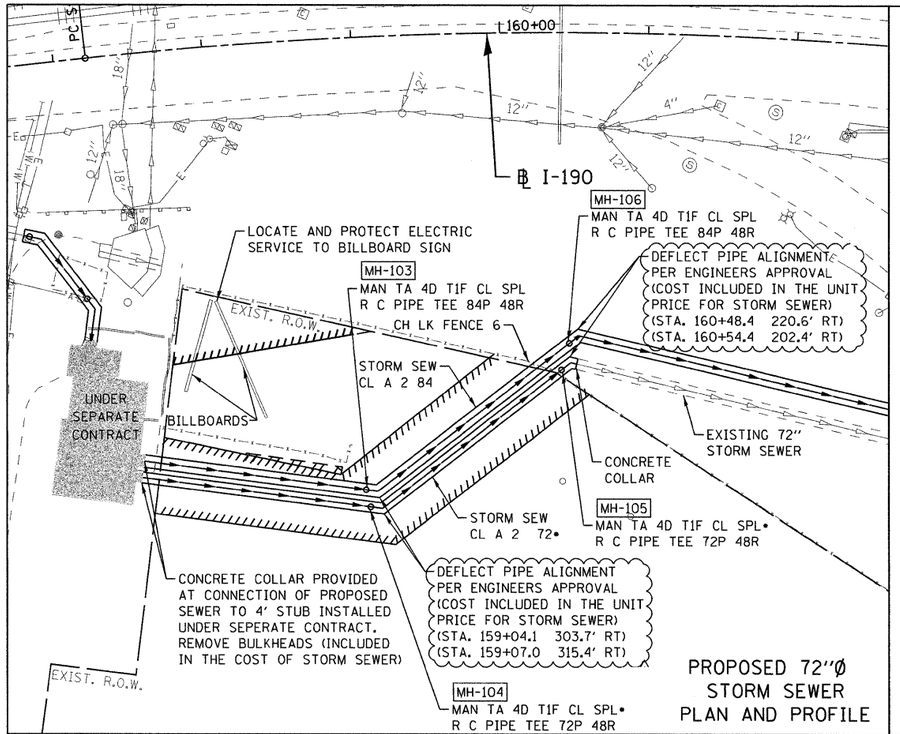

PROPOSED 72"Ø STORM SEWER PLAN AND PROFILE

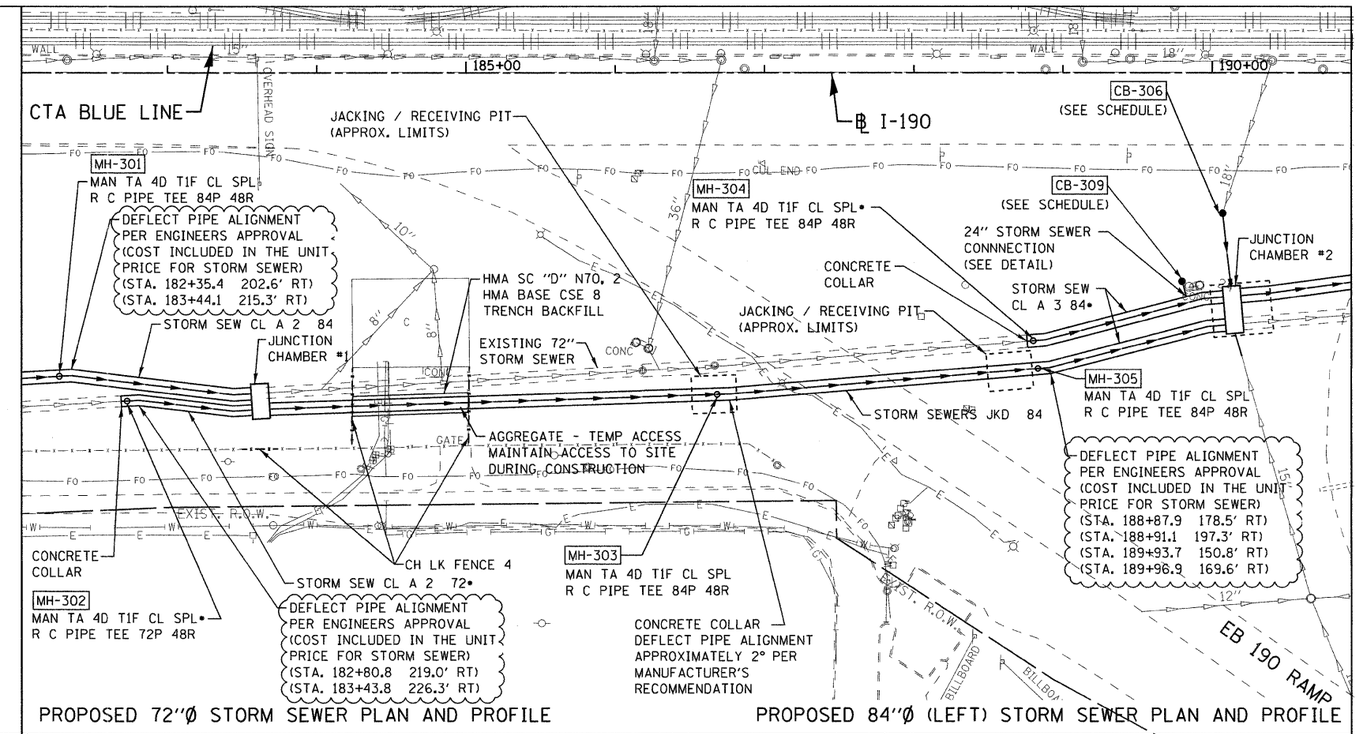

PROPOSED 72"Ø STORM SEWER PLAN AND PROFILE

PROPOSED 84"Ø (LEFT) STORM SEWER PLAN AND PROFILE

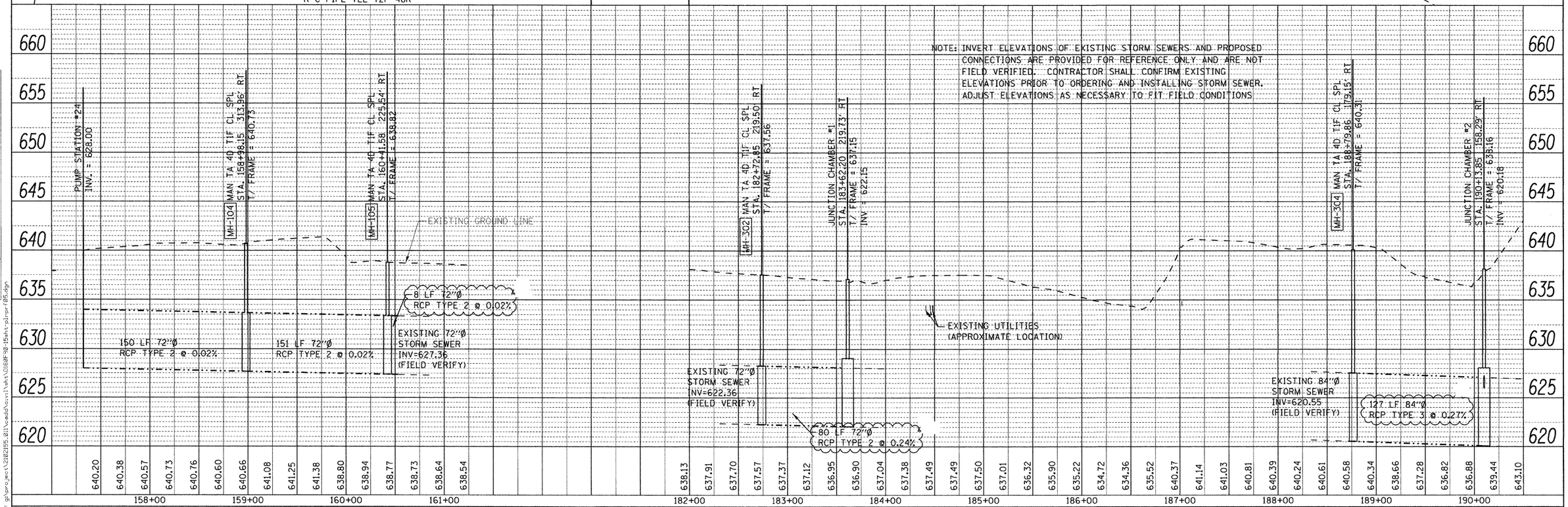

NOTE: INVERT ELEVATIONS OF EXISTING STORM SEWERS AND PROPOSED CONNECTIONS ARE PROVIDED FOR REFERENCE ONLY AND ARE NOT FIELD VERIFIED. CONTRACTOR SHALL CONFIRM EXISTING ELEVATIONS PRIOR TO ORDERING AND INSTALLING STORM SEWER. ADJUST ELEVATIONS AS NECESSARY TO FIT FIELD CONDITIONS

PLAN	SURVEYED	PLOTTED	ROADWAY CHECKED	RT. OF WAY CHECKED	AREA FILE NAME	NOTE BOOK	NO.	BY	DATE

PROFILE	SURVEYED	PLOTTED	GRADES CHECKED	B.M. NOTED	STRUCTURE NOTATNS CHKD	NOTE BOOK	NO.	BY	DATE

FILE NAME = g:\proj_west\2102195.01\roadway\sht\D160F90-15sht-plnprf05.dgn

ENTRAN

USER NAME = 2book.d	DESIGNED - DJB	REVISED -
	DRAWN - ENTRAN	REVISED -
PLOT SCALE = 50.00 ft / IN.	CHECKED - DAK	REVISED -
PLOT DATE = 10/25/2011	DATE - 09/07/11	REVISED -

STATE OF ILLINOIS
DEPARTMENT OF TRANSPORTATION

PUMP STATION 24 STORM SEWER IMPROVEMENT
STORM SEWER PLAN AND PROFILE DETAIL

SCALE: 50.00 ft / IN. SHEET NO. OF SHEETS STA. TO STA.

F.A.I. RTE.	SECTION	COUNTY	TOTAL SHEETS	SHEET NO.
190	0102.5-T	COOK	41	16
		CONTRACT NO.60F90		
FED. ROAD DIST. NO. 1	ILLINOIS	FED. AID PROJECT		

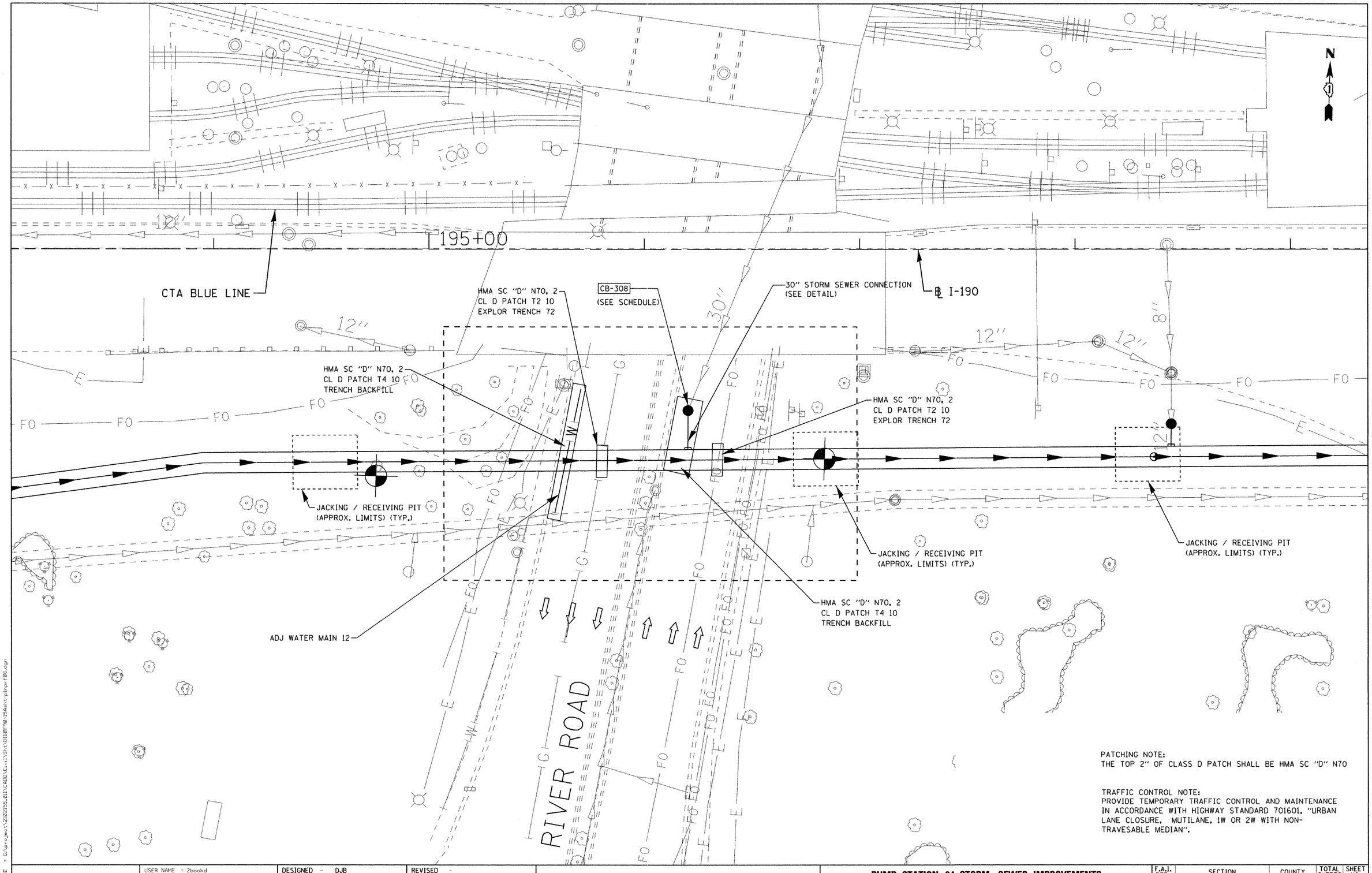

PATCHING NOTE:
THE TOP 2" OF CLASS D PATCH SHALL BE HMA SC "D" N70

TRAFFIC CONTROL NOTE:
PROVIDE TEMPORARY TRAFFIC CONTROL AND MAINTENANCE IN ACCORDANCE WITH HIGHWAY STANDARD 701601, "URBAN LANE CLOSURE, MUTILANE, 1W OR 2W WITH NON-TRAVESABLE MEDIAN".

FILE NAME = G:\projects\2102155.01\CADD\Civil\Sht\0160F90-15Ahst-plnprf06.dgn

ENTRAN	USER NAME = 2bookd	DESIGNED - DJB	REVISED -
		DRAWN - ENTRAN	REVISED -
	PLOT SCALE = 20.00 ft / IN.	CHECKED - DAK	REVISED -
	PLOT DATE = 10/11/2011	DATE - 09/07/11	REVISED -

STATE OF ILLINOIS
DEPARTMENT OF TRANSPORTATION

PUMP STATION 24 STORM SEWER IMPROVEMENTS
RIVER ROAD PLAN DETAIL

SCALE: 20.00 ft / IN. SHEET NO. OF SHEETS STA. TO STA.

F.A.I. RTE.	SECTION	COUNTY	TOTAL SHEETS	SHEET NO.
190	0102.5-T	COOK	41	17
		CONTRACT NO. 60F90		
FED. ROAD DIST. NO. 1	ILLINOIS	FED. AID PROJECT		

SCHEDULE OF STORM SEWERS

UPSTREAM STRUCTURE	DOWNSTREAM STRUCTURE	SLOPE	SEWER INVERTS		STORM SEWER REMOVAL, 12"	STORM SEWER REMOVAL, 15"	STORM SEWER REMOVAL, 18"	STORM SEWER REMOVAL, 24"	STORM SEWER REMOVAL, 27"	STORM SEWER REMOVAL, 30"	STORM SEWER CLASS A, TYPE 3, 12"	STORM SEWER CLASS A, TYPE 3, 15"	STORM SEWER CLASS A, TYPE 3, 18"	STORM SEWER CLASS A, TYPE 3, 24"	STORM SEWER CLASS A, TYPE 3, 27"	STORM SEWER CLASS A, TYPE 3, 30"	UPSTREAM DRAINAGE STRUCTURE							
																	CATCH BASINS, TYPE A, 4' DIA. WITH TYPE 1 FRAME, CLOSED LID	CATCH BASINS, TYPE A, 4' DIA. WITH TYPE 8 GRATE	CATCH BASINS, TYPE A, 5' DIA. WITH TYPE 1 FRAME, CLOSED LID	CATCH BASINS, 6'-DIAMETER TYPE B, TYPE 7 GRATE	GRATE ELEV.	STATION	OFFSET	
		%	UPSTREAM	DOWNSTREAM	LF	LF	LF	LF	LF	LF	LF	LF	LF	LF	LF	LF	EACH	EACH	EACH	EACH				
CB-109	PR 84" SS	2.00%	630.48	630.12					52						15				1		642.28	164+66.56	252.87'	RT
CB-110	PR 84" SS	2.00%	631.15	630.99		32						8						1			638.39	165+41.52	262.83'	RT
CB-111	EX 72" SS	1.08%	632.05	631.35							65							1			638.55	163+17.12	336.57'	RT
CB-204	PR 84" SS	2.00%	628.35	628.19	31						8						1				639.35	178+43.54	214.22'	RT
CB-306	J.C. #2	2.00%	626.56	626.00			54	38					47						1		642.34	190+06.82	93.44'	RT
EX 15" SS	J.C. #2	2.00%	626.32	626.00		16						16												
CB-308	PR 96" SS	2.00%	622.90	622.74						43						16			1		631.73	196+20.20	74.78'	RT
CB-309	PR 84" SS	2.00%	624.34	624.18										8						1	635.26	189+79.58	139.29'	RT
CB-402	PR 96" SS	2.00%	622.87	622.71	34						8						1				645.63	198+44.53	81.07'	RT
CB-404	PR 96" SS	2.00%	620.78	620.62				37						8					1		645.03	201+94.30	78.87'	RT
CB-407	PR 96" SS	2.00%	619.40	619.24	33						8						1				635.46	207+92.03	73.06'	RT
				TOTALS	98	48	54	75	52	43	89	24	47	16	15	16	3	2	4	1				

UPSTREAM STRUCTURE	DOWNSTREAM STRUCTURE	SLOPE	SEWER INVERTS		STORM SEWER, CLASS A, TYPE 2, 72"	STORM SEWER, CLASS A, TYPE 2, 84"	STORM SEWER, CLASS A, TYPE 3, 84"	STORM SEWER, CLASS A, TYPE 4, 96"	STORM SEWER, CLASS A, TYPE 6, 84"	STORM SEWERS, JACKED IN PLACE, 84"	STORM SEWERS, JACKED IN PLACE, 96"
		%	UPSTREAM	DOWNSTREAM	LF	LF	LF	LF	LF	LF	LF
MH-101	MH-102	0.24%	601.22	601.07					51		
MH-102	PS #24	0.24%	601.07	601.00					27		
PS #24	MH-103	0.02%	627.00	626.96		146					
MH-103	MH-106	0.02%	626.96	626.92		162					
MH-106	MH-107	0.02%	626.92	626.86		256					
MH-107	MH-108	0.24%	626.86	626.41		11				172	
MH-108	MH-201	0.24%	626.41	625.17						515	
MH-201	MH-202	0.24%	625.17	624.31						356	
MH-202	MH-203	0.24%	624.31	623.39						383	
MH-203	MH-301	0.24%	623.39	622.45		199				189	
MH-301	J.C. #1	0.24%	622.45	622.15		125					
J.C. #1	MH-303	0.28%	622.15	621.32		296					
MH-303	MH-305	0.32%	621.32	620.61			22			186	
MH-305	J.C. #2	0.33%	620.61	620.18			125				
J.C. #2	MH-401	0.37%	620.18	617.15				423			394
MH-401	MH-403	0.37%	617.15	615.86				123			219
MH-403	MH-405	0.37%	615.86	614.70				306			
MH-405	MH-406	0.37%	614.70	613.65				13			263
MH-406	J.C. #3	0.37%	613.65	613.30				91			
J.C. #3	OUTLET	0.35%	613.30	613.27				8			
PS #24	MH-104	0.02%	628.00	627.70	150						
MH-104	MH-105	0.02%	627.70	627.39	151						
MH-105	EX 72" SS	0.02%	627.39	627.36	8						
MH-302	J.C. #1	0.24%	622.36	622.15	80						
MH-304	J.C. #2	0.27%	620.55	620.18			127				
				TOTALS	389	1195	274	964	78	1801	876

NOTE: INVERT ELEVATIONS OF EXISTING STORM SEWERS AND PROPOSED CONNECTIONS ARE PROVIDED FOR REFERENCE ONLY AND ARE NOT FIELD VERIFIED. CONTRACTOR SHALL CONFIRM EXISTING ELEVATIONS PRIOR TO ORDERING AND INSTALLING STORM SEWER. ADJUST ELEVATIONS AS NECESSARY TO FIT FIELD CONDITIONS

FILE NAME = g:\proj\2182155_011\cadd\civil\sht\D160F90-26sht-sssched.dgn

ENTRAN

USER NAME = 2bookd	DESIGNED - DJB	REVISED -	
	DRAWN - ENTRAN	REVISED -	
PLOT SCALE = 1.00 ' / IN.	CHECKED - DAK	REVISED -	
PLOT DATE = 10/25/2011	DATE - 09/07/11	REVISED -	

STATE OF ILLINOIS
DEPARTMENT OF TRANSPORTATION

PUMP STATION 24 STORM SEWER IMPROVEMENTS
STORM SEWER SCHEDULE

SCALE: 1.00 ' / IN. | SHEET NO. OF SHEETS | STA. TO STA.

F.A.I. RTE.	SECTION	COUNTY	TOTAL SHEETS	SHEET NO.
190	0102.5-T	COOK	41	18
		CONTRACT NO. 60F90		

FED. ROAD DIST. NO. 1 | ILLINOIS | FED. AID PROJECT

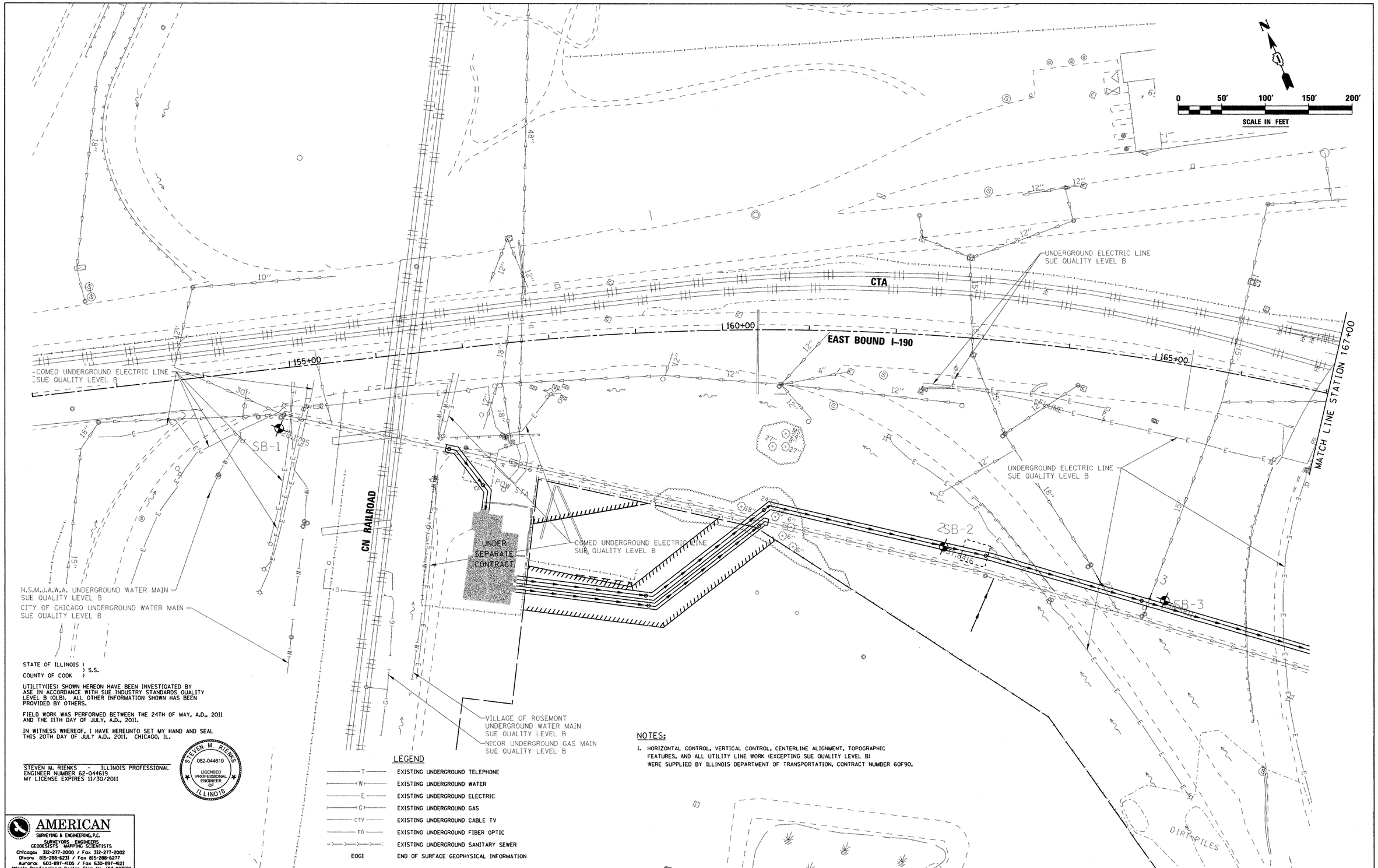

STATE OF ILLINOIS)
) S.S.
COUNTY OF COOK)

UTILITY(IES) SHOWN HEREON HAVE BEEN INVESTIGATED BY ASE IN ACCORDANCE WITH SUE INDUSTRY STANDARDS QUALITY LEVEL B (QLB). ALL OTHER INFORMATION SHOWN HAS BEEN PROVIDED BY OTHERS.

FIELD WORK WAS PERFORMED BETWEEN THE 24TH OF MAY, A.D., 2011 AND THE 11TH DAY OF JULY, A.D., 2011.

IN WITNESS WHEREOF, I HAVE HEREUNTO SET MY HAND AND SEAL THIS 20TH DAY OF JULY A.D., 2011. CHICAGO, IL.

STEVEN M. RIENKS - ILLINOIS PROFESSIONAL ENGINEER NUMBER 62-044619
MY LICENSE EXPIRES 11/30/2011

STEVEN M. RIENKS
062-044619
LICENSED PROFESSIONAL ENGINEER OF ILLINOIS

LEGEND

—T—	EXISTING UNDERGROUND TELEPHONE
—W—	EXISTING UNDERGROUND WATER
—E—	EXISTING UNDERGROUND ELECTRIC
—G—	EXISTING UNDERGROUND GAS
—CTV—	EXISTING UNDERGROUND CABLE TV
—FO—	EXISTING UNDERGROUND FIBER OPTIC
—>—>—>—	EXISTING UNDERGROUND SANITARY SEWER
EOGI	END OF SURFACE GEOPHYSICAL INFORMATION

NOTES:

1. HORIZONTAL CONTROL, VERTICAL CONTROL, CENTERLINE ALIGNMENT, TOPOGRAPHIC FEATURES, AND ALL UTILITY LINE WORK (EXCEPTING SUE QUALITY LEVEL B) WERE SUPPLIED BY ILLINOIS DEPARTMENT OF TRANSPORTATION, CONTRACT NUMBER 60F90.

AMERICAN
SURVEYING & ENGINEERING, P.C.
SURVEYORS ENGINEERS
GEODESISTS MAPPING SCIENTISTS
Chicago: 312-277-2000 / Fax 312-277-2002
Dixon: 815-288-6231 / Fax 815-288-6277
Aurora: 630-897-4105 / Fax 630-897-4121
Illinois Professional Design Firm No. 184-003192

FILE NAME = G:\project\2102155.011\CADD\Civil\Sht\D16\60F90-17sht-SUE01.dgn	USER NAME = 2bookd	DESIGNED -	REVISED -
		DRAWN -	REVISED -
	PLOT SCALE = 50.00 ' / IN.	CHECKED -	REVISED -
	PLOT DATE = 9/9/2011	DATE -	REVISED -

STATE OF ILLINOIS
DEPARTMENT OF TRANSPORTATION

SUE INVESTIGATION OF UNDERGROUND UTILITIES
I-190 AT PUMP STATION #24 TO DES PLAINES RIVER

SCALE: 1"=50' | SHEET NO. 1 OF 4 SHEETS | STA. 152+00 TO STA. 167+00

F.A. RTE.	SECTION	COUNTY	TOTAL SHEETS	SHEET NO.
190	0102.5-T	COOK	41	19
		CONTRACT NO. 60F90		
		ILLINOIS FED. AID PROJECT		

STATE OF ILLINOIS)
) S.S.
COUNTY OF COOK)

UTILITY(IES) SHOWN HEREON HAVE BEEN INVESTIGATED BY ASE IN ACCORDANCE WITH SUE INDUSTRY STANDARDS QUALITY LEVEL B (QLB). ALL OTHER INFORMATION SHOWN HAS BEEN PROVIDED BY OTHERS.

FIELD WORK WAS PERFORMED BETWEEN THE 24TH OF MAY, A.D., 2011 AND THE 11TH DAY OF JULY, A.D., 2011.

IN WITNESS WHEREOF, I HAVE HEREUNTO SET MY HAND AND SEAL THIS 20TH DAY OF JULY A.D., 2011. CHICAGO, IL.

STEVEN M. RIENKS - ILLINOIS PROFESSIONAL ENGINEER NUMBER 62-044619
MY LICENSE EXPIRES 11/30/2011

STEVEN M. RIENKS 062-044619 LICENSED PROFESSIONAL ENGINEER OF ILLINOIS

LEGEND

—T—	EXISTING UNDERGROUND TELEPHONE
—W—	EXISTING UNDERGROUND WATER
—E—	EXISTING UNDERGROUND ELECTRIC
—G—	EXISTING UNDERGROUND GAS
—CTV—	EXISTING UNDERGROUND CABLE TV
—FO—	EXISTING UNDERGROUND FIBER OPTIC
—>—>—>—	EXISTING UNDERGROUND SANITARY SEWER
EOGI	END OF SURFACE GEOPHYSICAL INFORMATION

N

0 50' 100' 150' 200'
SCALE IN FEET

NOTES:

1. HORIZONTAL CONTROL, VERTICAL CONTROL, CENTERLINE ALIGNMENT, TOPOGRAPHIC FEATURES, AND ALL UTILITY LINE WORK (EXCEPTING SUE QUALITY LEVEL B) WERE SUPPLIED BY ILLINOIS DEPARTMENT OF TRANSPORTATION, CONTRACT NUMBER 60F90.

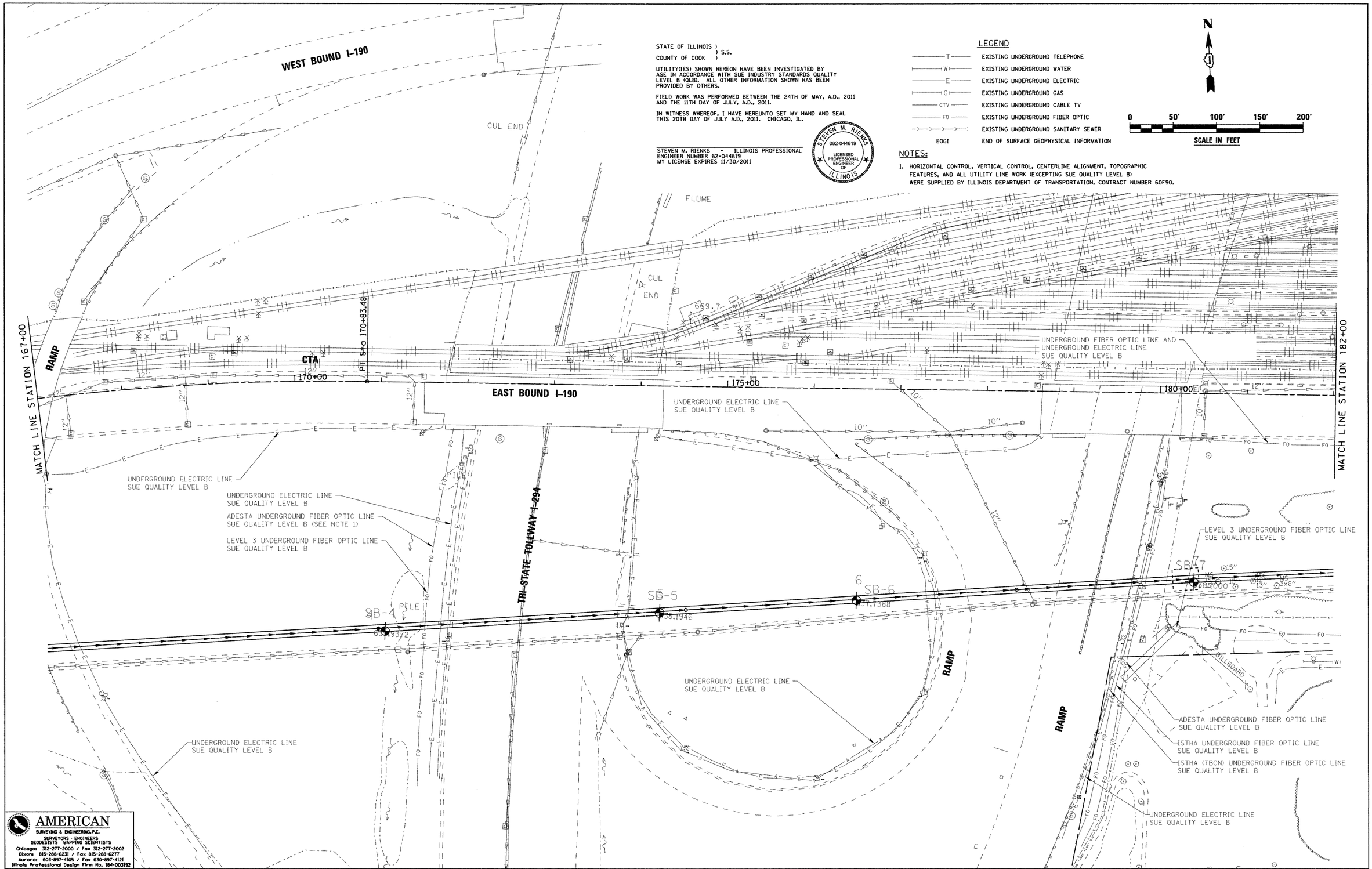

AMERICAN
SURVEYING & ENGINEERING, P.C.
SURVEYORS - ENGINEERS
GEODESISTS MAPPING SCIENTISTS
Chicago: 312-277-2000 / Fax 312-277-2002
Dixon: 815-288-6231 / Fax 815-288-6277
Aurora: 630-897-4105 / Fax 630-897-4121
Illinois Professional Design Firm No. 184-003192

FILE NAME = g:\project\2102155.011\cadd\civil\sht\D16F90-18sht-SUE02.dgn	USER NAME = 2bookd	DESIGNED -	REVISED -
		DRAWN -	REVISED -
	PLOT SCALE = 50.00 ' / IN.	CHECKED -	REVISED -
	PLOT DATE = 9/7/2011	DATE -	REVISED -

STATE OF ILLINOIS
DEPARTMENT OF TRANSPORTATION

SUE INVESTIGATION OF UNDERGROUND UTILITIES
I-190 AT PUMP STATION #24 TO DES PLAINES RIVER

SCALE: 1"=50' | SHEET NO. 2 OF 4 SHEETS | STA. 167+00 TO STA. 182+00

F.A. RTE.	SECTION	COUNTY	TOTAL SHEETS	SHEET NO.
190	0102.5-T	COOK	41	20
		CONTRACT NO. 60F90		
		ILLINOIS FED. AID PROJECT		

STATE OF ILLINOIS)
) S.S.
COUNTY OF COOK)

UTILITY(IES) SHOWN HEREON HAVE BEEN INVESTIGATED BY ASE IN ACCORDANCE WITH SUE INDUSTRY STANDARDS QUALITY LEVEL B (QLB). ALL OTHER INFORMATION SHOWN HAS BEEN PROVIDED BY OTHERS.

FIELD WORK WAS PERFORMED BETWEEN THE 24TH OF MAY, A.D., 2011 AND THE 11TH DAY OF JULY, A.D., 2011.

IN WITNESS WHEREOF, I HAVE HEREUNTO SET MY HAND AND SEAL THIS 20TH DAY OF JULY A.D., 2011. CHICAGO, IL.

STEVEN M. RIENKS - ILLINOIS PROFESSIONAL ENGINEER NUMBER 62-044619
MY LICENSE EXPIRES 11/30/2011

STEVEN M. RIENKS 062-044619 LICENSED PROFESSIONAL ENGINEER OF ILLINOIS

LEGEND

T	EXISTING UNDERGROUND TELEPHONE
W	EXISTING UNDERGROUND WATER
E	EXISTING UNDERGROUND ELECTRIC
G	EXISTING UNDERGROUND GAS
CTV	EXISTING UNDERGROUND CABLE TV
FO	EXISTING UNDERGROUND FIBER OPTIC
	EXISTING UNDERGROUND SANITARY SEWER
EOGI	END OF SURFACE GEOPHYSICAL INFORMATION

N

0 50' 100' 150' 200'
SCALE IN FEET

NOTES:

1. HORIZONTAL CONTROL, VERTICAL CONTROL, CENTERLINE ALIGNMENT, TOPOGRAPHIC FEATURES, AND ALL UTILITY LINE WORK (EXCEPTING SUE QUALITY LEVEL B) WERE SUPPLIED BY ILLINOIS DEPARTMENT OF TRANSPORTATION, CONTRACT NUMBER 60F90.

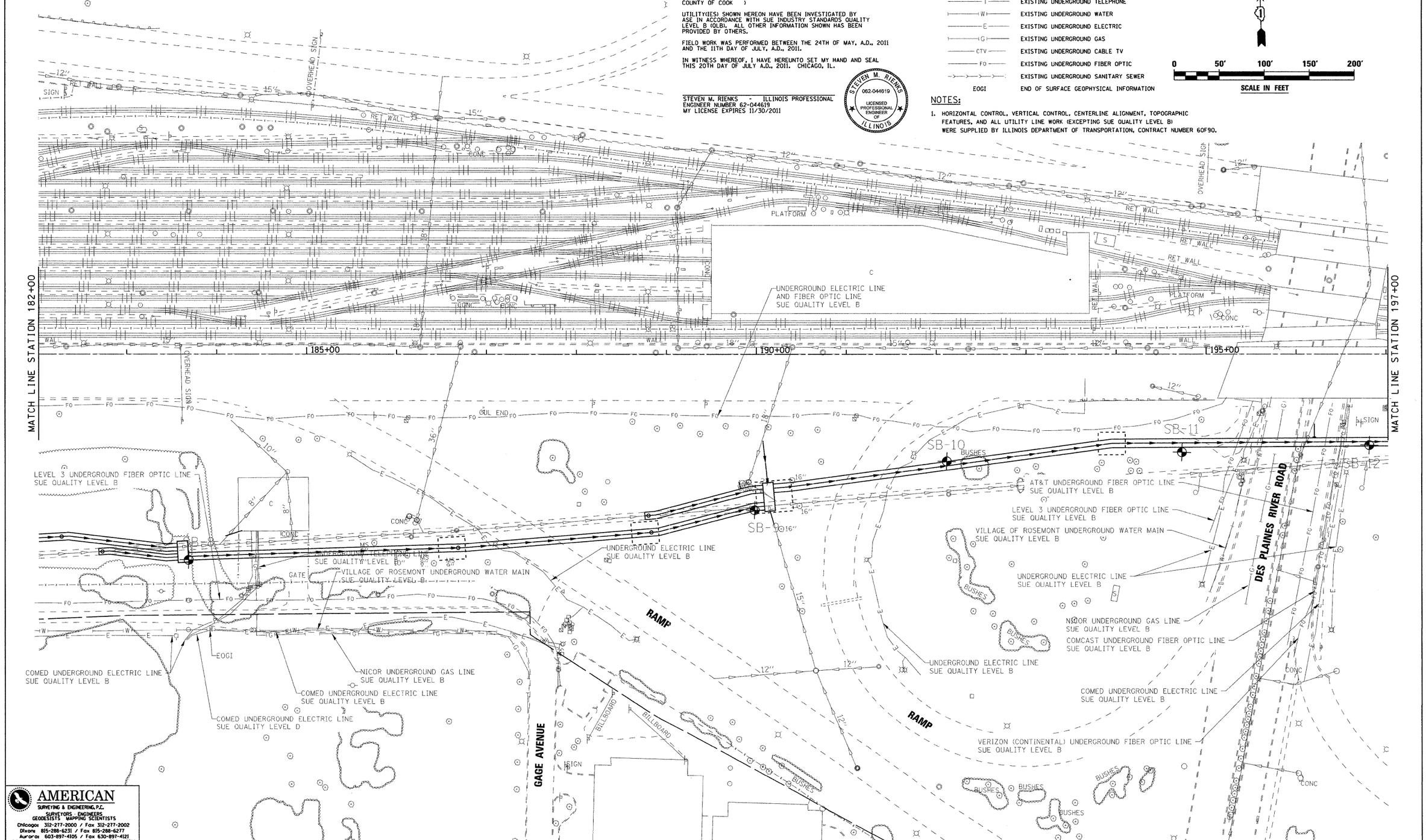

AMERICAN
SURVEYING & ENGINEERING, P.C.
SURVEYORS ENGINEERS
GEODESISTS MAPPING SCIENTISTS
Chicago: 312-277-2000 / Fax 312-277-2002
Dixon: 815-288-6231 / Fax 815-288-6277
Aurora: 630-897-4105 / Fax 630-897-4121
Illinois Professional Design Firm No. 184-003192

FILE NAME = g:\project\2102155_011\cadd\civil\sht\D16	USER NAME = 2bookd	DESIGNED -	REVISED -
		DRAWN -	REVISED -
	PLOT SCALE = 50.0000 ' / IN.	CHECKED -	REVISED -
	PLOT DATE = 9/7/2011	DATE -	REVISED -

F9-19sht-SUE03.dgn

STATE OF ILLINOIS
DEPARTMENT OF TRANSPORTATION

SUE INVESTIGATION OF UNDERGROUND UTILITIES
I-190 AT PUMP STATION #24 TO DES PLAINES RIVER

SCALE: 1"=50' | SHEET NO. 3 OF 4 SHEETS | STA. 182+00 TO STA. 197+00

F.A. RTE.	SECTION	COUNTY	TOTAL SHEETS	SHEET NO.
190	0102.5-T	COOK	41	21
		CONTRACT NO. 60F90		
		ILLINOIS FED. AID PROJECT		

STATE OF ILLINOIS)
) S.S.
COUNTY OF COOK)

UTILITY(IES) SHOWN HEREON HAVE BEEN INVESTIGATED BY ASE IN ACCORDANCE WITH SUE INDUSTRY STANDARDS QUALITY LEVEL B (QLB). ALL OTHER INFORMATION SHOWN HAS BEEN PROVIDED BY OTHERS.

FIELD WORK WAS PERFORMED BETWEEN THE 24TH OF MAY, A.D., 2011 AND THE 11TH DAY OF JULY, A.D., 2011.

IN WITNESS WHEREOF, I HAVE HEREUNTO SET MY HAND AND SEAL THIS 20TH DAY OF JULY A.D., 2011. CHICAGO, IL.

STEVEN M. RIENKS - ILLINOIS PROFESSIONAL ENGINEER NUMBER 62-044619
MY LICENSE EXPIRES 11/30/2011

STEVEN M. RIENKS
062-044619
LICENSED PROFESSIONAL ENGINEER OF ILLINOIS

LEGEND

T	EXISTING UNDERGROUND TELEPHONE
W	EXISTING UNDERGROUND WATER
E	EXISTING UNDERGROUND ELECTRIC
G	EXISTING UNDERGROUND GAS
CTV	EXISTING UNDERGROUND CABLE TV
FO	EXISTING UNDERGROUND FIBER OPTIC
	EXISTING UNDERGROUND SANITARY SEWER
EOGI	END OF SURFACE GEOPHYSICAL INFORMATION

N

0 50' 100' 150' 200'
SCALE IN FEET

NOTES:

1. HORIZONTAL CONTROL, VERTICAL CONTROL, CENTERLINE ALIGNMENT, TOPOGRAPHIC FEATURES, AND ALL UTILITY LINE WORK (EXCEPTING SUE QUALITY LEVEL B) WERE SUPPLIED BY ILLINOIS DEPARTMENT OF TRANSPORTATION, CONTRACT NUMBER 60F90.

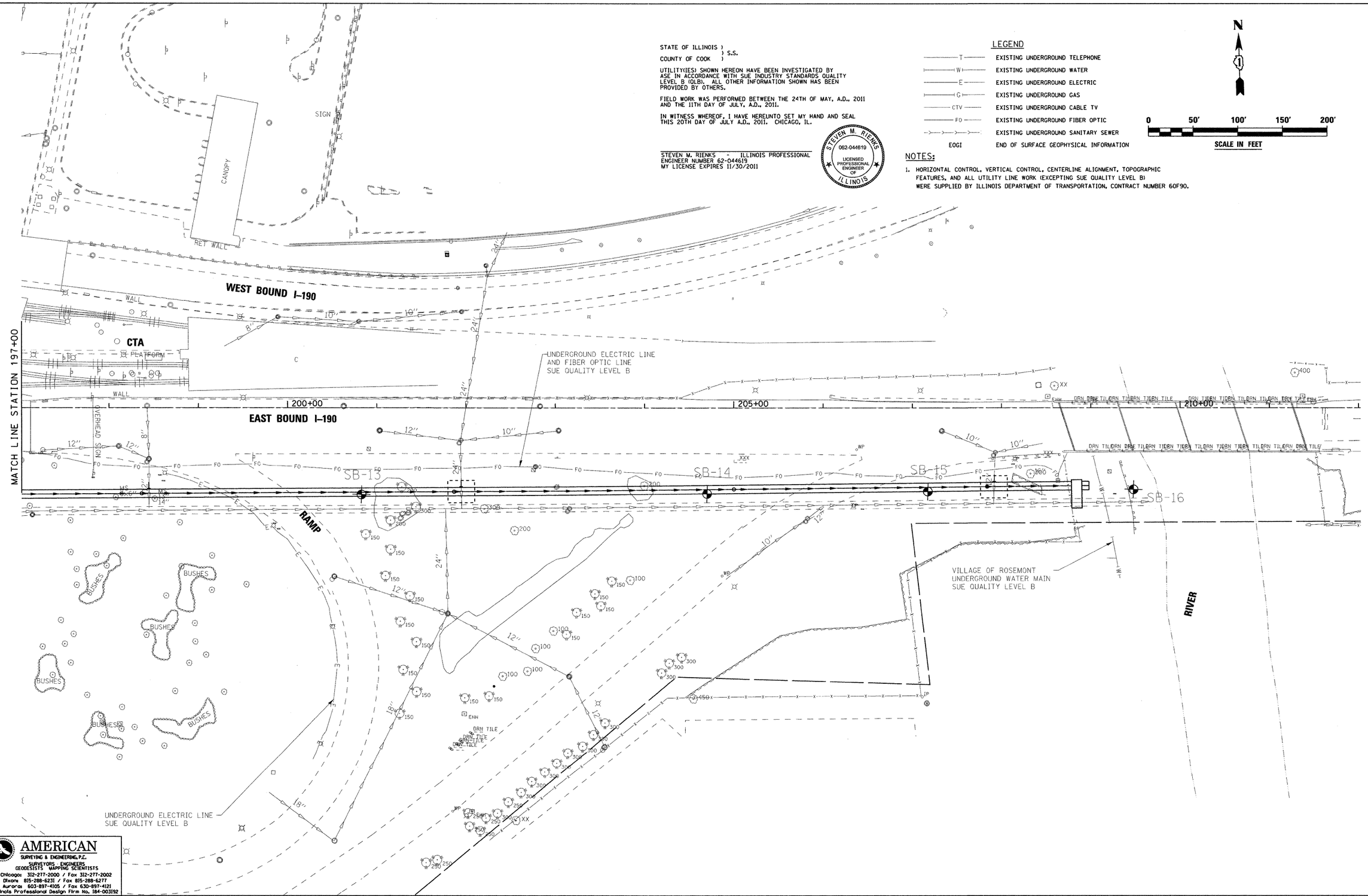

AMERICAN
SURVEYING & ENGINEERING, P.C.
SURVEYORS ENGINEERS
GEODESISTS MAPPING SCIENTISTS
Chicago: 312-277-2000 / Fax 312-277-2002
Dixon: 815-288-6231 / Fax 815-288-6277
Aurora: 603-897-4105 / Fax 630-897-4121
Illinois Professional Design Firm No. 184-003192

FILE NAME = g:\project\2102155.011\cadd\civil\sht\D16	USER NAME = 2bookd	DESIGNED -	REVISED -	STATE OF ILLINOIS DEPARTMENT OF TRANSPORTATION	SUE INVESTIGATION OF UNDERGROUND UTILITIES I-190 AT PUMP STATION #24 TO DES PLAINES RIVER	F.A. RTE.	SECTION	COUNTY	TOTAL SHEETS	SHEET NO.
		DRAWN -	REVISED -			190	0102.5-T	COOK	41	22
	PLOT SCALE = 50.0000 ' / IN.	CHECKED -	REVISED -					CONTRACT NO. 60F90		
	PLOT DATE = 9/7/2011	DATE -	REVISED -		SCALE: 1"=50' / SHEET NO. 4 OF 4 SHEETS / STA. 197+00 TO STA. 210+00		ILLINOIS FED. AID PROJECT			

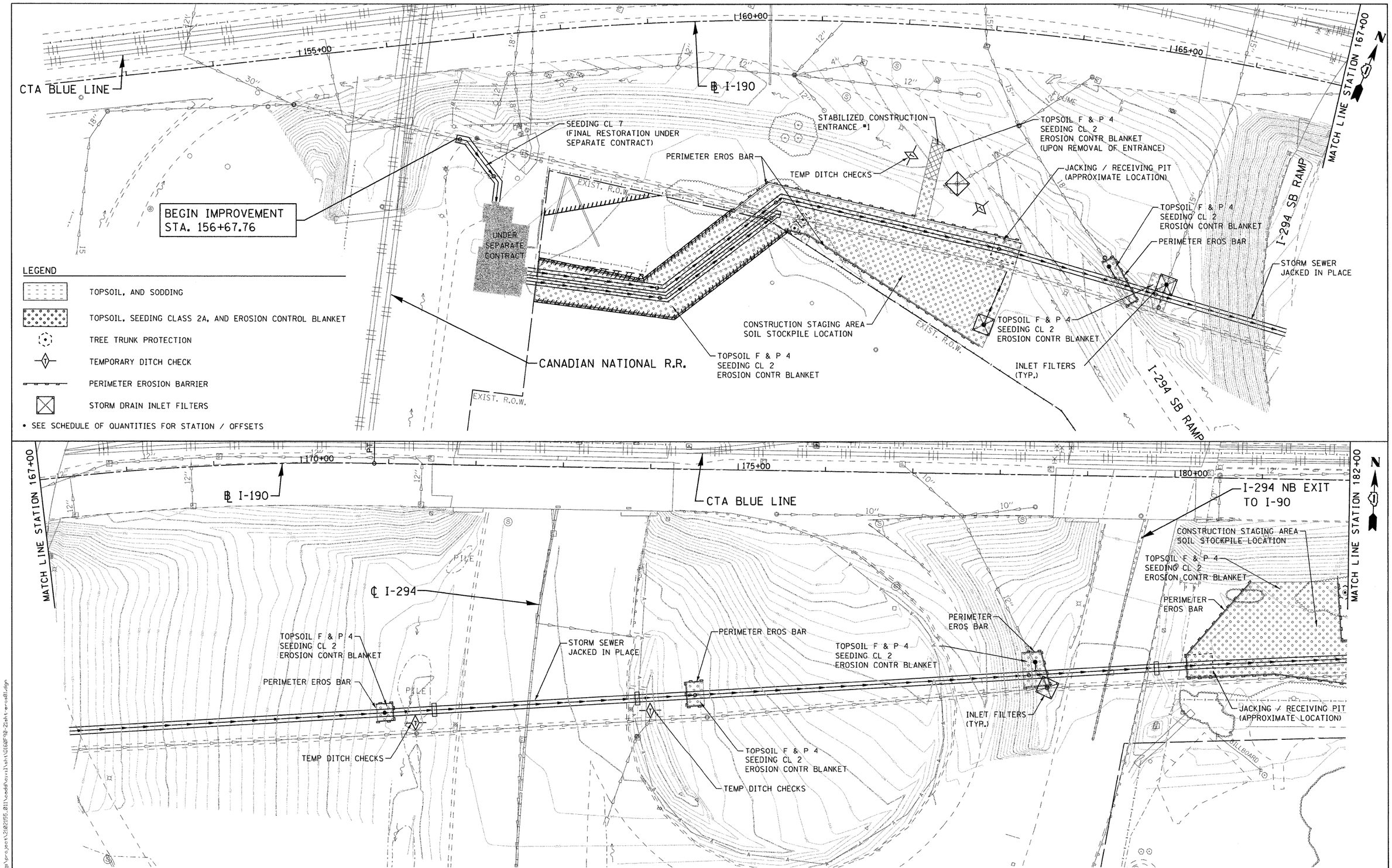

FILE NAME = g:\projects\20255.01\cadd\civil\sht\010F90-2lsht-eros01.dgn

ENTRAN	USER NAME = 2bookd	DESIGNED - DJB	REVISED -	STATE OF ILLINOIS DEPARTMENT OF TRANSPORTATION	PUMP STATION 24 STORM SEWER IMPROVEMENTS EROSION AND SEDIMENT CONTROL PLAN
		DRAWN - ENTRAN	REVISED -		
	PLOT SCALE = 50.00 ' / IN.	CHECKED - DAK	REVISED -		
	PLOT DATE = 10/11/2011	DATE - 09/07/11	REVISED -		SCALE: 50.00 ' / IN. SHEET NO. OF SHEETS STA. TO STA.

F.A.I. RTE.	SECTION	COUNTY	TOTAL SHEETS	SHEET NO.
190	0102.5-T	COOK	41	23
		CONTRACT NO. 60F90		
FED. ROAD DIST. NO. 1	ILLINOIS	FED. AID PROJECT		

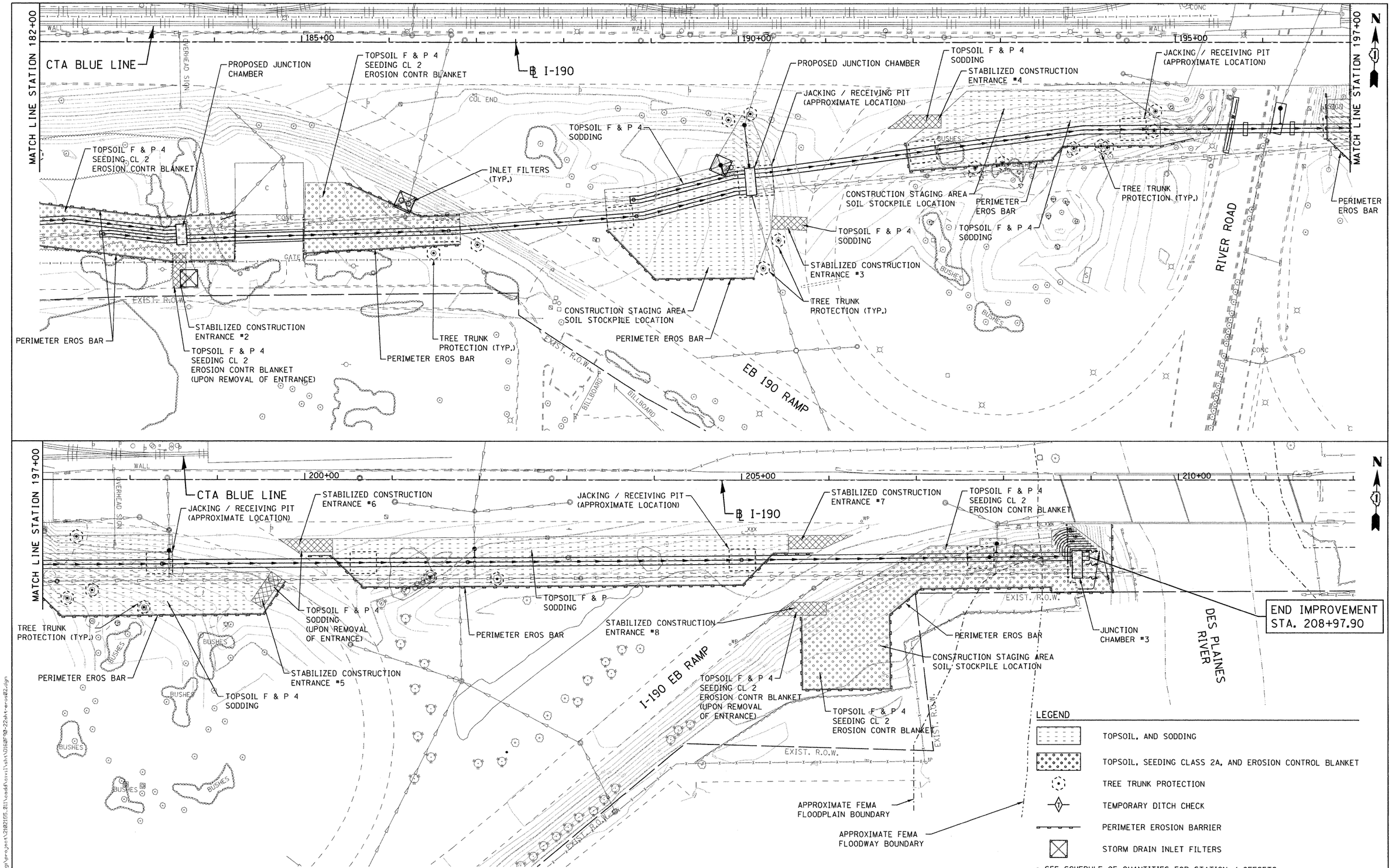

ENTRAN

USER NAME = 2bookd	DESIGNED - DJB	REVISED -	
	DRAWN - ENTRAN	REVISED -	
PLOT SCALE = 50.00 ft / IN.	CHECKED - DAK	REVISED -	
PLOT DATE = 10/11/2011	DATE - 09/07/11	REVISED -	

STATE OF ILLINOIS
DEPARTMENT OF TRANSPORTATION

PUMP STATION 24 STORM SEWER IMPROVEMENTS
EROSION AND SEDIMENT CONTROL PLAN

SCALE: 50.00 ft / IN. SHEET NO. OF SHEETS STA. TO STA.

F.A.I. RTE.	SECTION	COUNTY	TOTAL SHEETS	SHEET NO.
190	0102.5-T	COOK	41	24
		CONTRACT NO. 60F90		
FED. ROAD DIST. NO. 1	ILLINOIS	FED. AID PROJECT		

FILE NAME = g:\projects\2020155.01\cadd\civil\sht\016DF90-22sht-eros02.dgn

SOIL EROSION AND SEDIMENT CONTROL NOTES
****

J-HOOKS SHALL BE UTILIZED AT THE END OF PERIMETER EROSION BARRIER (SILT FENCE) PLACED ALONG SLOPES EXCEEDING 10% IN ACCORDANCE WITH STANDARD 280001.

ALL MATERIALS USED FOR TEMPORARY CONSTRUCTION ACTIVITIES WILL BE REMOVED TO UPLAND AREAS IMMEDIATELY FOLLOWING COMPLETION OF THE CONSTRUCTION ACTIVITY.

ANY MECHANIZED CLEARING OF VEGETATION IN THE UTILITY CORRIDOR SHALL BE SCHEDULED NO MORE THAN SEVEN (7) CALENDAR DAYS PRECEDING INSTALLATION OF THE UTILITY LINE IN THAT SEGMENT OF THE CORRIDOR. IN NO CASE SHALL VEGETATION IN THE ENTIRE CORRIDOR BE CLEARED PRIOR TO INSTALLATION OF THE UTILITY LINE.

THE WORK DESCRIBED ON THESE DRAWINGS IS AN INTEGRAL PART OF THE STORM WATER POLLUTION PREVENTION PLAN USED TO OBTAIN AN NPDES PERMIT FOR THE CONSTRUCTION OF THE PROJECT.

ALL WORK SHALL BE DONE IN ACCORDANCE WITH SECTION 280 OF THE STANDARD SPECIFICATIONS FOR ROAD AND BRIDGE CONSTRUCTION, LATEST REVISION. ALL SEDIMENT AND EROSION CONTROL MEASURES WILL BE INSTALLED PER IDOT STANDARD 280001 OR AS SPECIFIED HEREIN AND PAID FOR IN ACCORDANCE WITH SECTION 280 OF THE STANDARD SPECIFICATIONS. ALL CONSTRUCTION ACTIVITIES SHALL BE IN ACCORDANCE WITH THE NATIONAL POLLUTANT DISCHARGE ELIMINATION SYSTEM STORMWATER PERMIT NO ILR10, AND THE ILLINOIS URBAN MANUAL REVISED JANUARY, 2010.

SEDIMENT AND EROSION CONTROL DEVICES SHALL BE INSTALLED AND FUNCTIONAL PRIOR TO COMMENCING LAND DISTURBING ACTIVITIES.

WATER PUMPED OR OTHERWISE DISCHARGED FROM THE SITE DURING CONSTRUCTION DEWATERING SHALL BE FILTERED INTO A SILT BAG PROTECTED WITH SECONDARY MEASURES TO THE SATISFACTION OF THE ENGINEER. DEWATERING DIRECTLY INTO THE DES PLAINES RIVER IS PROHIBITED.

A STABILIZED MAT OF AGGREGATE UNDERLAIN WITH FILTER CLOTH (OR OTHER APPROPRIATE MEASURES) SHALL BE LOCATED AT ANY POINT WHERE TRAFFIC WILL BE ENTERING OR LEAVING A CONSTRUCTION-SITE OF A MAJOR DEVELOPMENT TO OR FROM A PUBLIC RIGHT-OF-WAY OR ROADWAY. ANY SEDIMENT OR SOIL REACHING AN IMPROVED PUBLIC RIGHT-OF-WAY OR ROADWAY AREA SHALL BE REMOVED BY SCRAPING OR STREET CLEANING AS ACCUMULATIONS WARRANT AND TRANSPORTED TO A CONTROLLED SEDIMENT DISPOSAL AREA.

QUALIFIED PERSONNEL SHALL INSPECT DISTURBED AREAS OF THE CONSTRUCTION SITE THAT HAVE NOT BEEN FINALLY STABILIZED, STRUCTURAL CONTROL MEASURES, AND LOCATIONS WHERE VEHICLES ENTER OR EXIT THE SITE AT LEAST ONCE EVERY SEVEN CALENDAR DAYS AND WITHIN 24 HOURS OF THE END OF A STORM THAT IS 0.5 INCHES OR GREATER OR EQUIVALENT SNOWMELT. STRUCTURAL CONTROL MEASURES, LOCATIONS WHERE VEHICLES ENTER OR EXIT, AND ALL DISTURBED AREAS SHOULD ALSO BE INSPECTED AFTER SIGNIFICANT SNOWMELT.

ALL CONTROL MEASURES SHALL BE KEPT OPERATIONAL AND MAINTAINED CONTINUOUSLY THROUGHOUT THE PERIOD OF LAND DISTURBANCE UNTIL PERMANENT SEDIMENT AND EROSION CONTROL MEASURES ARE OPERATIONAL.

THE EROSION CONTROL MEASURES SHOWN ARE BUT A GRAPHICAL REPRESENTATION OF SUGGESTED MEASURES. DEVIATIONS FROM THIS PLAN ARE TO BE EXPECTED AND SHOULD ADDRESS SPECIFIC PROJECT AREA CONCERNS AS DIRECTED BY THE ENGINEER.

ALL TEMPORARY SOIL EROSION AND SEDIMENT CONTROL MEASURES SHALL BE REMOVED WITHIN THIRTY (30) DAYS AFTER FINAL SITE STABILIZATION IS ACHIEVED OR AFTER THE TEMPORARY MEASURES ARE NOT LONGER NEEDED. TRAPPED SEDIMENT AND OTHER DISTURBED SOIL AREAS SHALL BE PERMANENTLY STABILIZED.

THE USE OF STRAW OR HAY BALES IS NOT PERMITTED FOR USE IN INLET AND PIPE PROTECTION.

WHERE CONCENTRATED FLOW LEAVES THE PROJECT SITE, THE PERIMETER EROSION BARRIER SHALL CONSIST OF ROLLED EXCELSIOR.

STOCKPILES OF SOIL AND OTHER CONSTRUCTION MATERIALS TO REMAIN IN PLACE FOR MORE THAN THREE (3) DAYS SHALL BE BORDERED WITH PERIMETER EROSION BARRIER. STOCKPILES TO REMAIN IN PLACE FOR 30 DAYS OR MORE SHALL RECEIVE TEMPORARY SEEDING.

TEMPORARY CONCRETE WASHOUT FACILITIES SHALL BE PROVIDED ON-SITE AND SHALL LOCATED AT THE DIRECTION OF THE ENGINEER. THE INSTALLATION, MAINTENANCE, AND PROPER DISPOSAL SHALL BE CONSIDERED IN THE COST OF THE CONTRACT.

TEMPORARY EROSION CONTROL SEEDING SHALL BE PROVIDED AT ALL ERODIBLE BARE EARTH AREAS.

ALL EROSION CONTROL MEASURES SHALL BE IN ACCORDANCE WITH THE REQUIREMENTS OF THE STANDARD SPECIFICATIONS AND OF THE APPLICABLE STATE STANDARDS FOR THE ENTIRE DURATION OF THE CONTRACT, OR UNTIL SUCH A TIME AS DIRECTED BY THE ENGINEER.

AT ANY AREA WHERE THERE IS NO PROPOSED GRADING, THE EXISTING GROUND COVER SHALL REMAIN.

THIS PROJECT WILL REQUIRE AUTHORIZATION UNDER (SWPPP) PERMIT

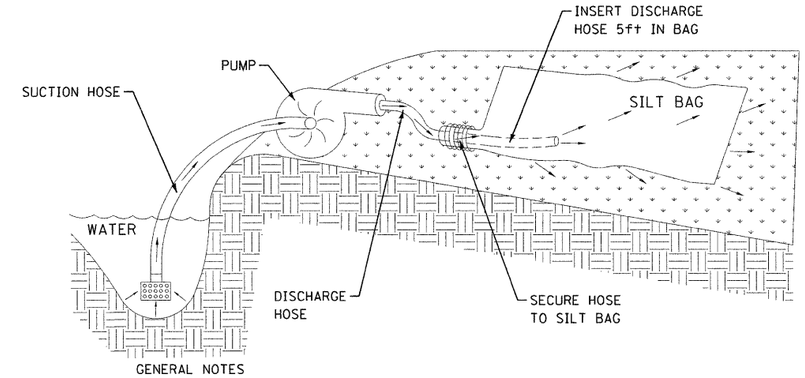

GENERAL NOTES

1. SILT BAGS SHALL BE PROVIDED AT EACH LOCATION WHERE WATER IS PUMPED ON SITE. THE SILT BAG SYSTEM IS USED TO COLLECT SEDIMENT CONTAINED IN THE DISCHARGED WATER, TO PREVENT THE SCOUR AND EROSION FROM WATER EXITING A PIPE AT HIGH VELOCITY, TO DEFUSE THE WATER OVER A WIDER AREA TO MINIMIZE EROSION AS THE WATER DRAINS AWAY, AND TO RETAIN OIL CONTAINED WITHIN EFFLUENT.
2. THE SILT BAG SHALL BE INSTALLED ACCORDING TO THE MANUFACTURER'S SPECIFICATIONS AND SHALL SHALL BE LOCATED ON THE GROUND OR ON A TRAILER OVER A RELATIVELY LEVEL AND STABILIZED AREA.
3. THE SILT BAG SHALL BE REPLACED WHEN HALF FULL OF SEDIMENT OR WHEN THE SEDIMENT HAS REDUCED THE FLOW RATE OF THE PUMP DISCHARGE TO AN IMPRACTICAL AMOUNT. ACCUMULATED SEDIMENT SHALL BE PROPERLY DISPOSED ANDSHALL NOT OCCUR NEAR WATERWAYS AND/OR ENVIRONMENTALLY SENSITIVE AREAS.
4. THE COST OF LABOR, EQUIPMENT, AND MATERIALS NECESSARY TO INSTALL, MAINTAIN, AND DISPOSE OF SILT BAG SHALL BE INCLUDED IN THE COST OF THE EROSION CONTROL PAY ITEMS.

SILT BAG FOR DEWATERING

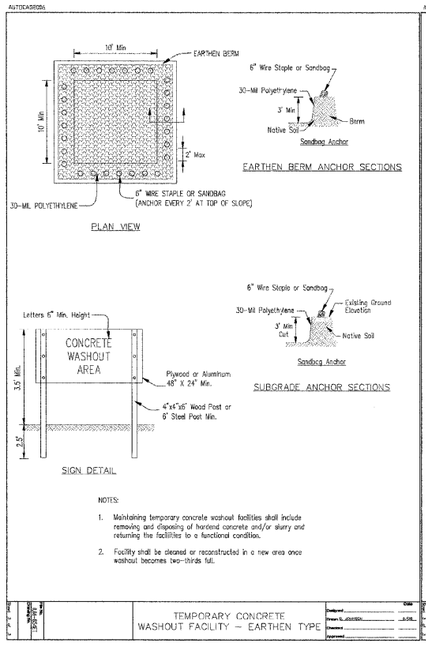

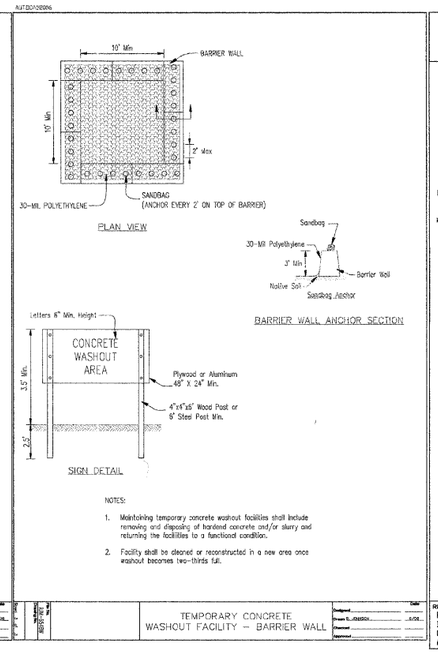

STABILIZED CONSTRUCTION ENTRANCE PLAN

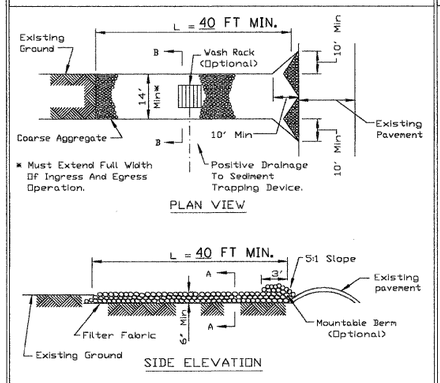

NOTES:
1. Filter fabric shall meet the requirements of material specification 592 GEOTEXTILE, Table I or 2, Class I, II or IV and shall be placed over the cleared area prior to the placing of rock.
2. Rock or reclaimed concrete shall meet one of the following IDOT coarse aggregate gradation, CA-1, CA-2, CA-3 or CA-4 and be placed according to construction specification 25 ROCKFILL using placement Method 1 and Class III compaction.
3. Any drainage facilities required because of washing shall be constructed according to manufacturers specifications.
4. If wash racks are used they shall be installed according to the manufacturer's specifications.

REFERENCE
Project
Designed — Date
Checked — Date
Approved — Date

NRCS Natural Resources Conservation Service

STANDARD DWG. NO. IL-630 SHEET 1 OF 2 DATE 8-18-94

STABILIZED CONSTRUCTION ENTRANCE PLAN

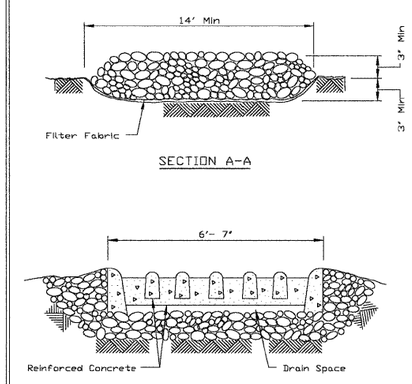

REFERENCE
Project
Designed — Date
Checked — Date
Approved — Date

NRCS Natural Resources Conservation Service

STANDARD DWG. NO. IL-630 SHEET 2 OF 2 DATE 8-18-94

FILE NAME = g:\projects\2012150_01\needed\civil\k\D160R-90-22sht-eros23.dgn

ENTRAN

USER NAME = 2bookd	DESIGNED - DJB	REVISED -	
	DRAWN - ENTRAN	REVISED -	
PLOT SCALE = 20.00 ' / IN.	CHECKED - DAK	REVISED -	
PLOT DATE = 10/11/2011	DATE - 09/07/11	REVISED -	

STATE OF ILLINOIS
DEPARTMENT OF TRANSPORTATION

PUMP STATION 24 STORM SEWER IMPROVEMENTS
EROSION AND SEDIMENT CONTROL DETAILS

SCALE: 20.00 ' / IN. | SHEET NO. OF SHEETS | STA. TO STA.

F.A.I. RTE.	SECTION	COUNTY	TOTAL SHEETS	SHEET NO.
190	0102.5-T	COOK	41	25
		CONTRACT NO. 60F90		

FED. ROAD DIST. NO. 1 | ILLINOIS | FED. AID PROJECT

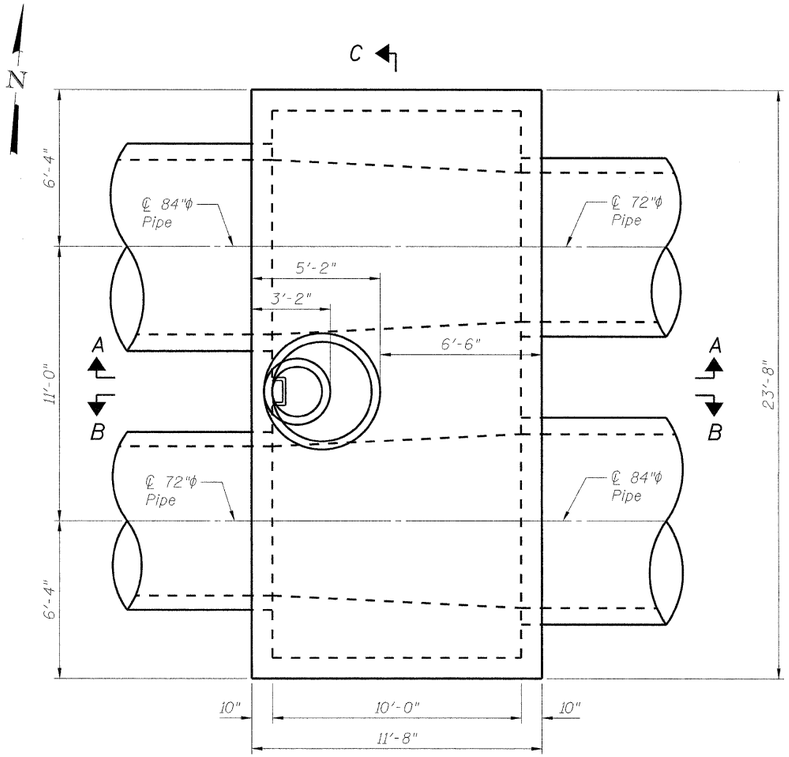

TOP PLAN

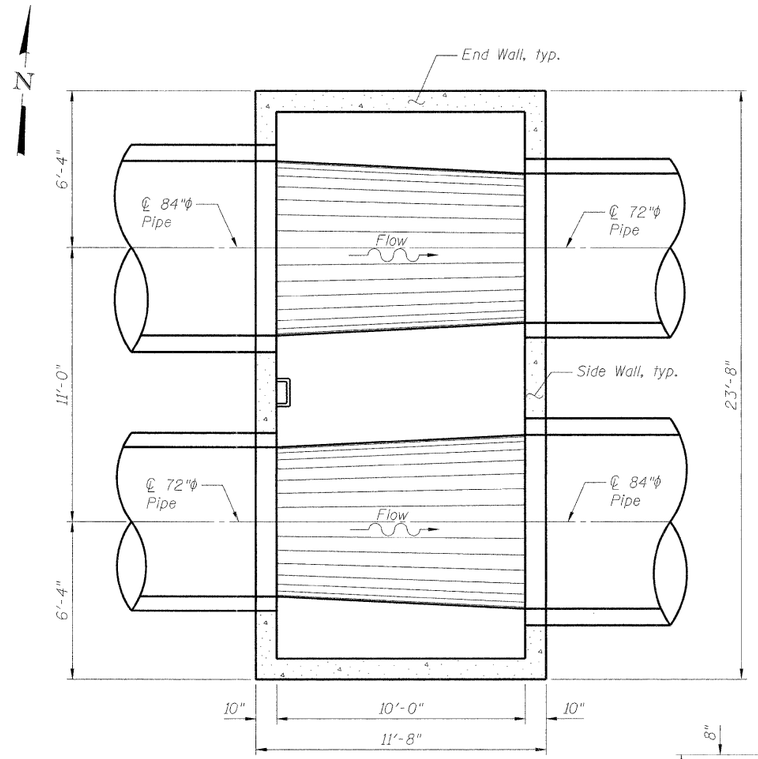

SECTIONAL PLAN

NOTES

For additional information, see Standard Specifications.

For reinforcement details, see Sheets 27-28.

For Station and Offset, see Proposed Storm Sewer Plan and Profile.

The maximum width of excavation is the width of the junction chamber plus 4 feet, and the maximum length is the length of the junction chamber plus 4 feet. Excavation outside the maximum dimensions specified will not be measured for payment.

The design of the braced excavation is the responsibility of the Contractor. The Contractor shall submit drawings and design for the braced excavation to the Engineer for approval. The braced excavation design and drawings shall be signed and sealed by an Illinois licensed Structural Engineer, submitted and approved prior to the start of any work. The Engineer's approval shall not relieve the Contractor from the sole responsibility of the structural integrity of the braced excavation system.

All dimensions and elevations shall be verified prior to construction.

Concrete pipe sizes shall be coordinated with openings provided into junction chambers before pouring concrete.

Concrete cover for reinforcement steel to be 2" unless otherwise noted.

All concrete edges shall be chamfered 1 inch.

Concrete Compressive Strength fc'=3,500 psi.

Steel Yield Stength=60,000 psi.

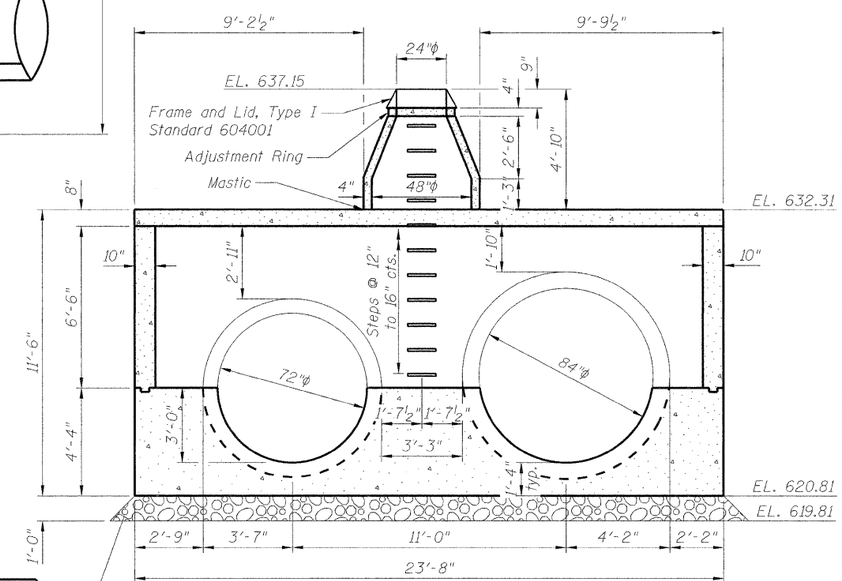

SECTION C-C

Remove and replace unsuitable soil.
Backfill with Porous Granular Embankment.

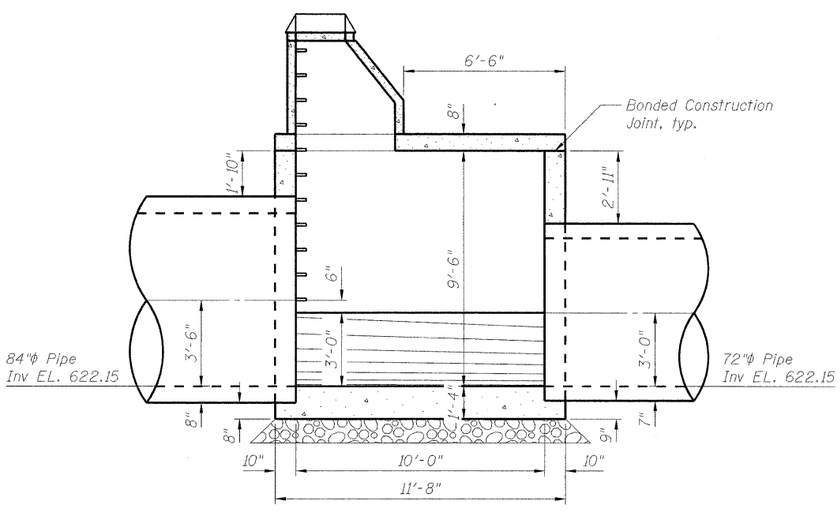

SECTION A-A

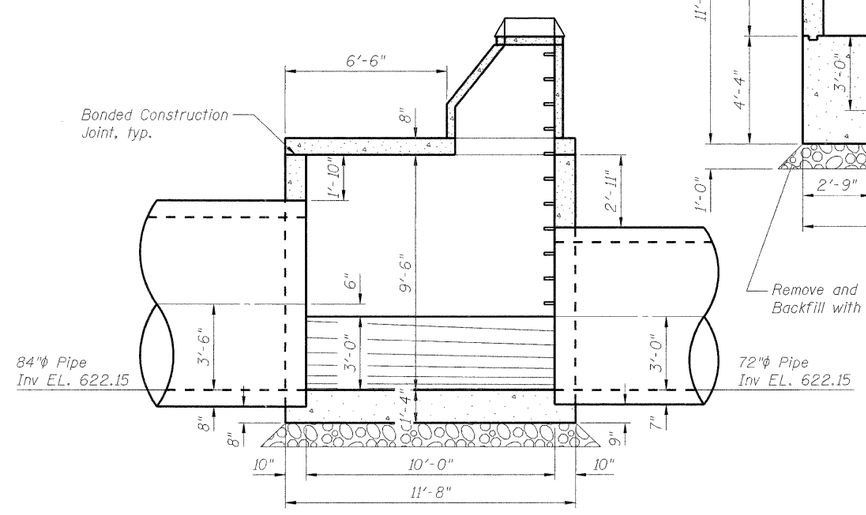

SECTION B-B

JUNCTION CHAMBER #1
BILL OF MATERIAL

Item	Unit	Total
Removal and Disposal of Unsuitable Material	Cu. Yds.	12
Porous Granular Embankment	Cu. Yds.	12
Concrete Structures	Cu. Yds.	47.4
Reinforcement Bars	Pound	5,440
Manholes, Type A, 4'-Diameter, Type 1 Frame, Closed Lid	Each	1
Braced Excavation	Cu. Yds.	278

FILE NAME = g:\projects\2122155.011\cadd\structure\001.Box1.Dimensions.dgn

ENTRAN

USER NAME = 2bookd	DESIGNED - TWO	REVISED -	
	CHECKED - BHS	REVISED -	
PLOT SCALE = N/A	DRAWN - TWO	REVISED -	
PLOT DATE = 9/7/2011	CHECKED - GSP	REVISED -	

STATE OF ILLINOIS
DEPARTMENT OF TRANSPORTATION

JUNCTION CHAMBER #1
GENERAL PLAN AND ELEVATION

SHEET NO. OF SHEETS

F.A.I. RTE.	SECTION	COUNTY	TOTAL SHEETS	SHEET NO.
190	0102.5-T	COOK	41	26
		CONTRACT NO. 60F90		

FED. ROAD DIST. NO. 1 | ILLINOIS | FED. AID PROJECT

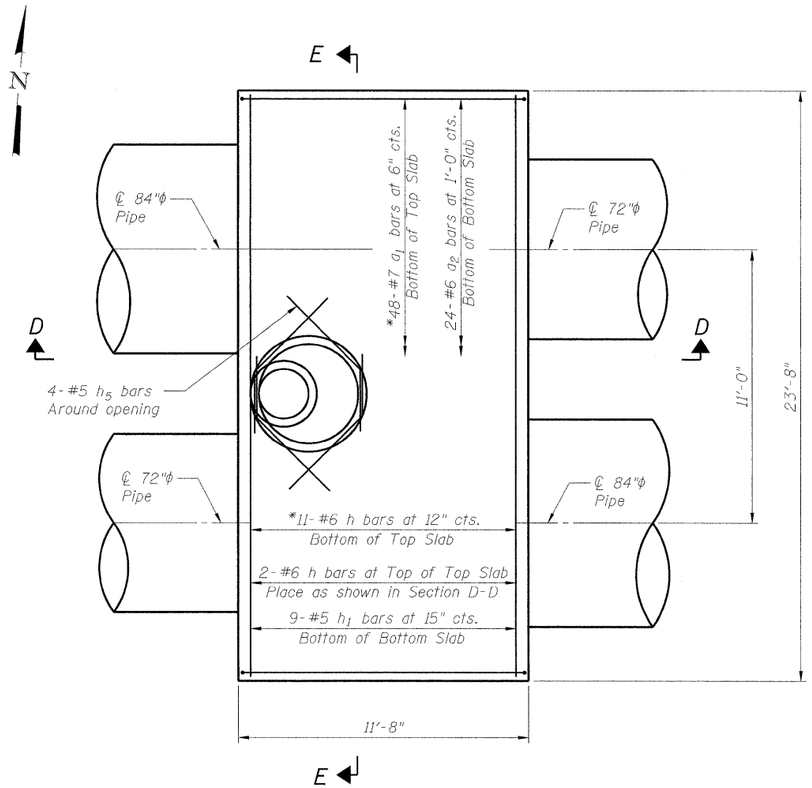

TOP PLAN

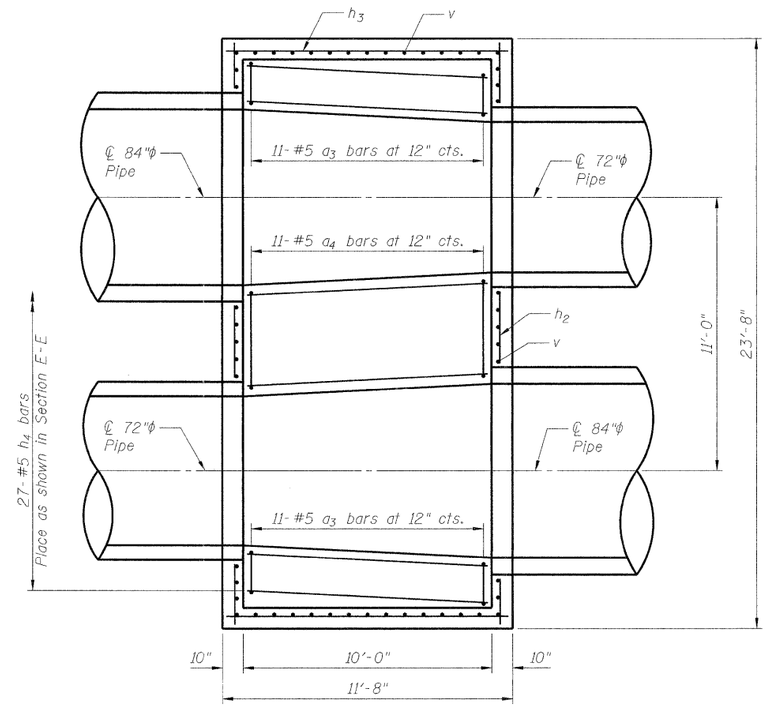

SECTIONAL PLAN

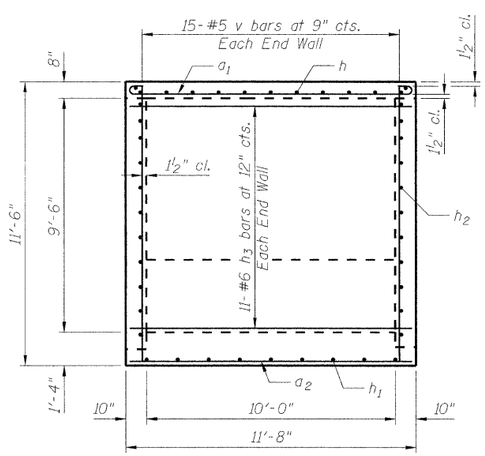

END WALL SECTION

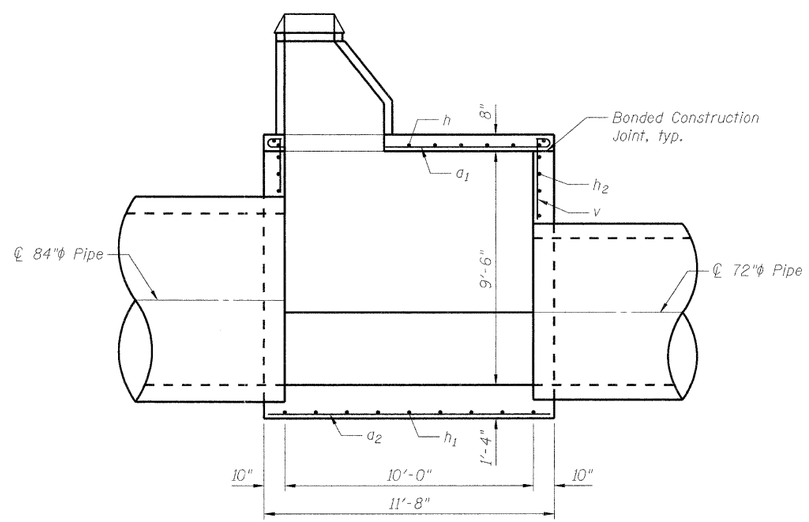

SECTION D-D

*Cut bars to fit as required

FILE NAME = g:\projects\2102155.811\cadd\structure\002.Box1.Reinforcement1.dgn

ENTRAN	USER NAME = 2bookd	DESIGNED - TWO	REVISED -
		CHECKED - BHS	REVISED -
	PLOT SCALE = N/A	DRAWN - TWO	REVISED -
	PLOT DATE = 9/7/2011	CHECKED - GSP	REVISED -

STATE OF ILLINOIS
DEPARTMENT OF TRANSPORTATION

JUNCTION CHAMBER #1
REINFORCEMENT DETAILS (1 OF 2)

SHEET NO. OF SHEETS

F.A.I. RTE.	SECTION	COUNTY	TOTAL SHEETS	SHEET NO.
190	0102.5-T	COOK	41	27
		CONTRACT NO. 60F90		
FED. ROAD DIST. NO. 1	ILLINOIS	FED. AID PROJECT		

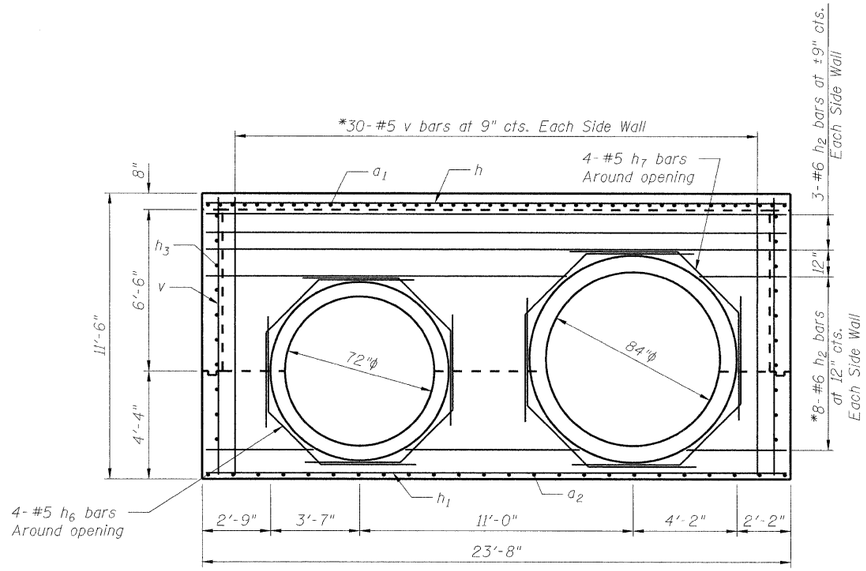

SIDE WALL SECTION

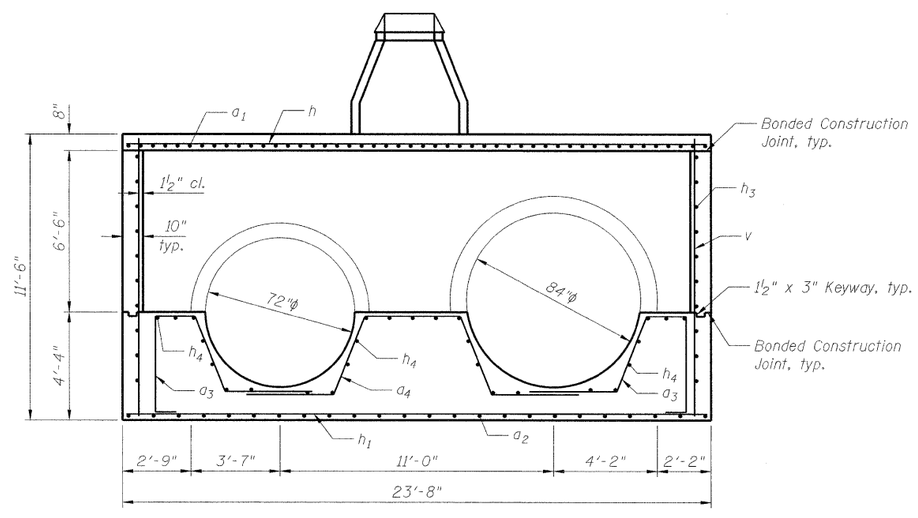

SECTION E-E

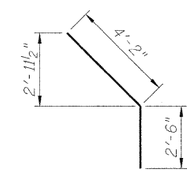

BAR h_5

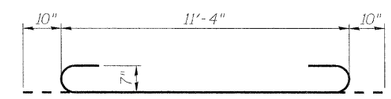

BAR a_1

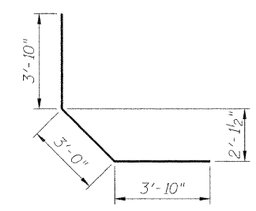

BAR h_6

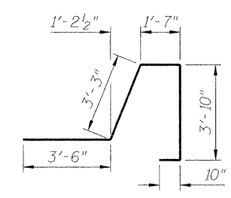

BAR a_3

*Cut bars to fit as required

BILL OF MATERIAL

Bar	No.	Size	Length	Shape
a_1	48	#7	13'-0"	
a_2	24	#6	11'-4"	
a_3	22	#5	13'-0"	
a_4	11	#5	17'-4"	
h	13	#6	23'-4"	
h_1	9	#5	23'-4"	
h_2	22	#6	23'-4"	
h_3	22	#6	11'-4"	
h_4	27	#5	9'-8"	
h_5	4	#5	6'-8"	
h_6	4	#5	10'-8"	
h_7	4	#5	12'-2"	
v	90	#5	11'-2"	

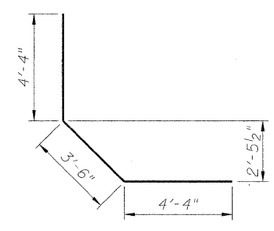

BAR h_7

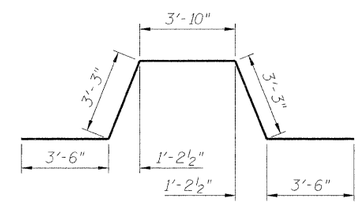

BAR a_4

FILE NAME = gr:\projects\2102155.211\cadd\structure\083.Bot.Reinforcement2.dgn

ENTRAN	USER NAME = 2bookd	DESIGNED - TWO	REVISED -	STATE OF ILLINOIS DEPARTMENT OF TRANSPORTATION	JUNCTION CHAMBER #1 REINFORCEMENT DETAILS (2 OF 2)	F.A.I. RTE.	SECTION	COUNTY	TOTAL SHEETS	SHEET NO.
		CHECKED - BHS	REVISED -			190	0102.5-T	COOK	41	28
	PLOT SCALE = N/A	DRAWN - TWO	REVISED -					CONTRACT NO. 60F90		
	PLOT DATE = 9/7/2011	CHECKED - GSP	REVISED -		SHEET NO. OF SHEETS	FED. ROAD DIST. NO. 1	ILLINOIS	FED. AID PROJECT		

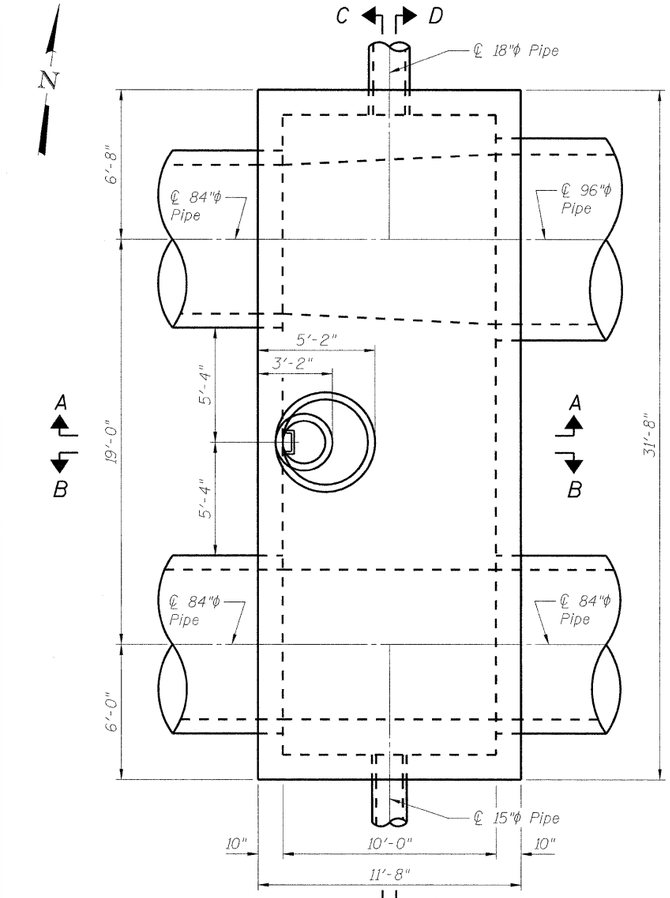

TOP PLAN

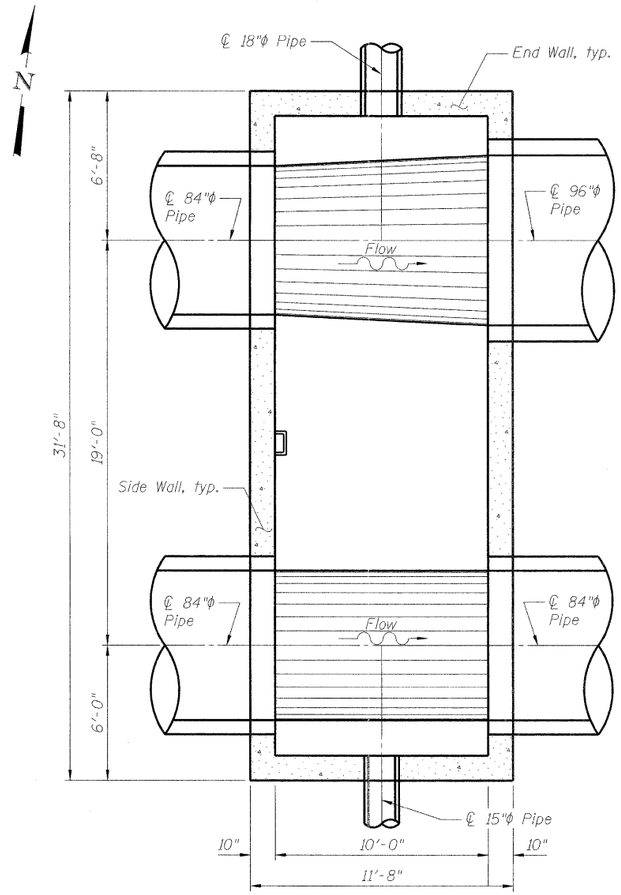

SECTIONAL PLAN

NOTES

For additional information, see Standard Specifications.
For reinforcement details, see Sheets 30-31.
For Station and Offset, see Proposed Storm Sewer Plan and Profile.

The maximum width of excavation is the width of the junction chamber plus 4 feet, and the maximum length is the length of the junction chamber plus 4 feet. Excavation outside the maximum dimensions specified will not be measured for payment.

The design of the braced excavation is the responsibility of the Contractor. The Contractor shall submit drawings and design for the braced excavation to the Engineer for approval. The braced excavation design and drawings shall be signed and sealed by an Illinois licensed Structural Engineer, submitted and approved prior to the start of any work. The Engineer's approval shall not relieve the Contractor from the sole responsibility of the structural integrity of the braced excavation system.

All dimensions and elevations shall be verified prior to construction.

Concrete pipe sizes shall be coordinated with openings provided into junction chambers before pouring concrete.

Concrete cover for reinforcement steel to be 2" unless otherwise noted.

All concrete edges shall be chamfered 1 inch.

Concrete Compressive Strength fc'=3,500 psi.

Steel Yield Stength=60,000 psi.

JUNCTION CHAMBER #2
BILL OF MATERIAL

Item	Unit	Total
Removal and Disposal of Unsuitable Material	Cu. Yds.	15
Porous Granular Embankment	Cu. Yds.	15
Concrete Structures	Cu. Yds.	73.4
Reinforcement Bars	Pound	7,550
Manholes, Type A, 4'-Diameter, Type 1 Frame, Closed Lid	Each	1
Braced Excavation	Cu. Yds.	423

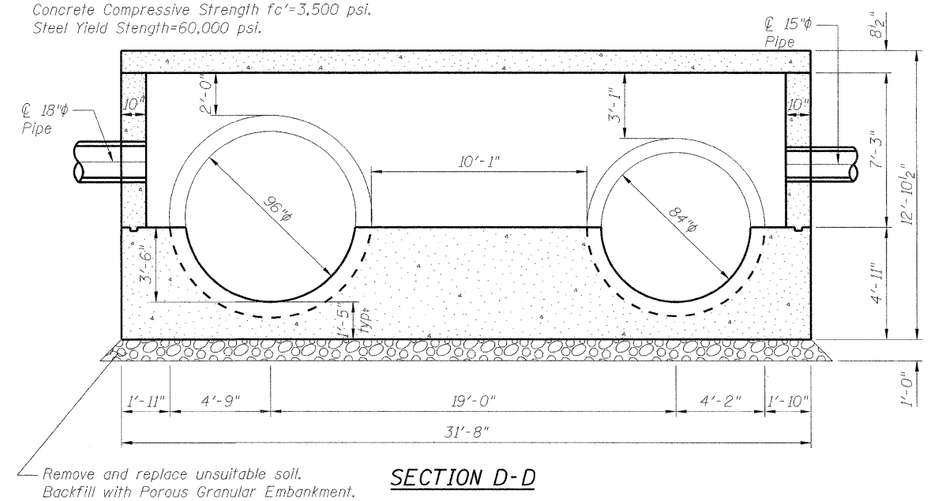

SECTION D-D

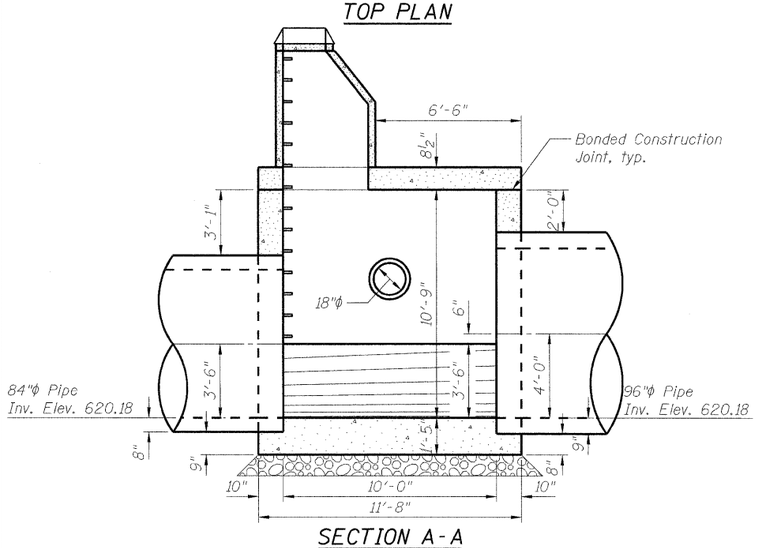

SECTION A-A

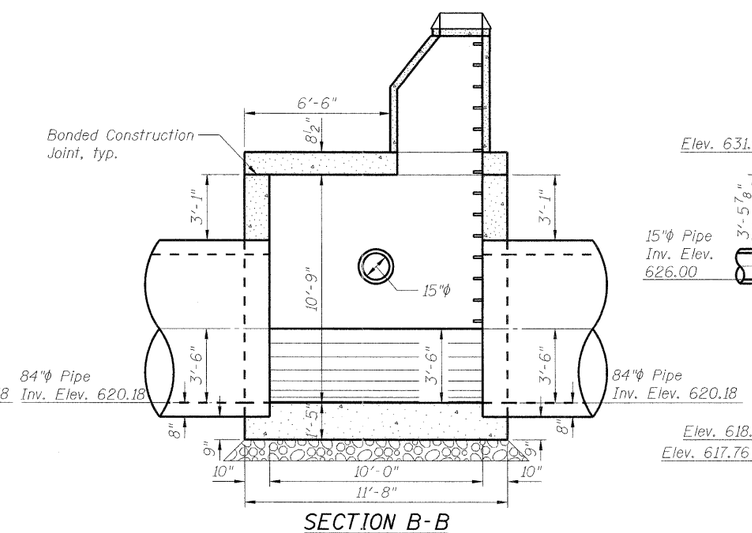

SECTION B-B

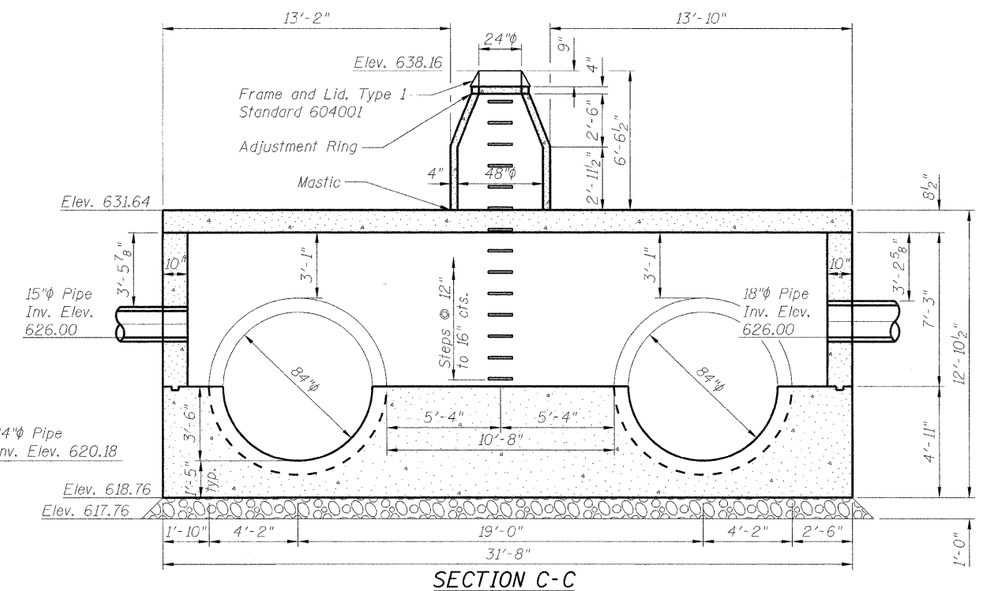

SECTION C-C

ENTRAN	USER NAME = 2bookd	DESIGNED - TWO	REVISED -
		CHECKED - BHS	REVISED -
	PLOT SCALE = N/A	DRAWN - TWO	REVISED -
	PLOT DATE = 9/7/2011	CHECKED - GSP	REVISED -

STATE OF ILLINOIS
DEPARTMENT OF TRANSPORTATION

JUNCTION CHAMBER #2
GENERAL PLAN AND ELEVATION

SHEET NO. OF SHEETS

F.A.I. RTE.	SECTION	COUNTY	TOTAL SHEETS	SHEET NO.
190	0102.5-T	COOK	41	29
		CONTRACT NO. 60F90		
FED. ROAD DIST. NO. 1	ILLINOIS	FED. AID PROJECT		

FILE NAME = g:\projects\202155.811\cadd\structure\094_Box2_Dimensions.dgn

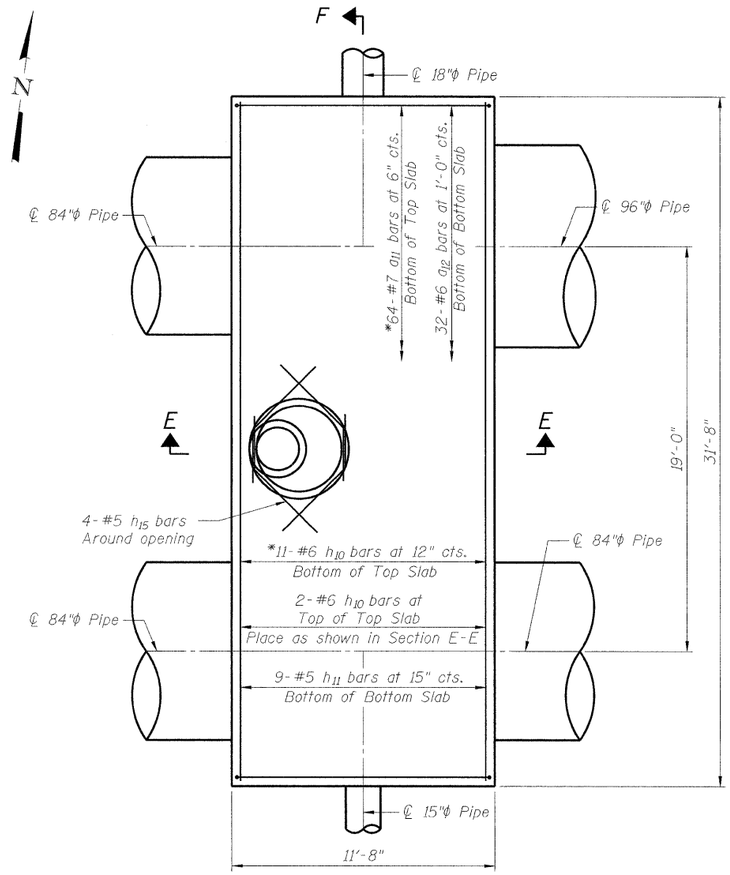

TOP PLAN

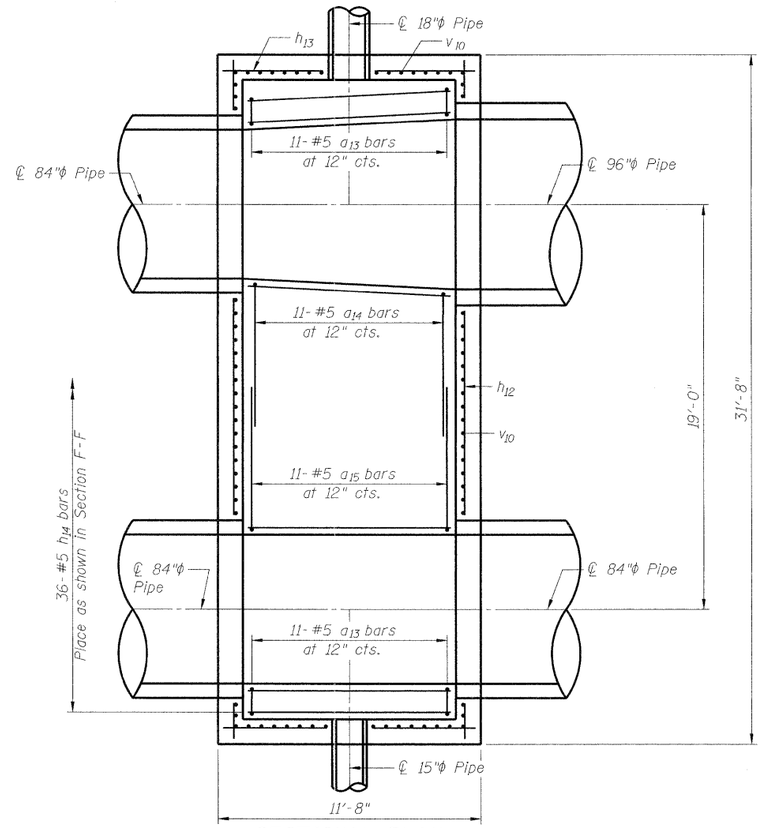

SECTIONAL PLAN

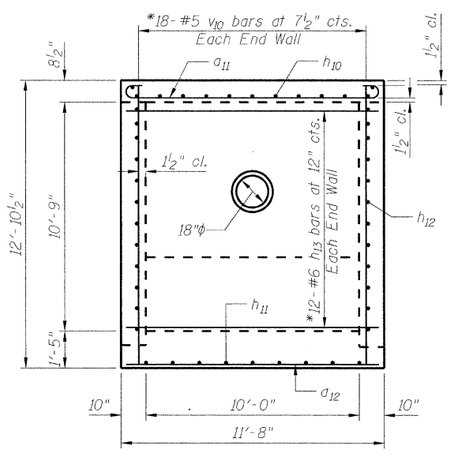

END WALL SECTION

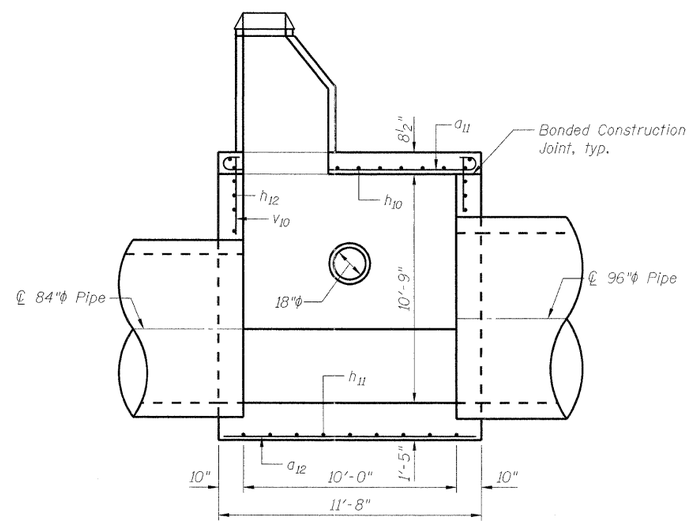

SECTION E-E

*Cut bars to fit as required

FILE NAME = g:\projects\2102155.011\cadd\structure\005.Box2.Reinforcement1.dgn

ENTRAN	USER NAME = 2bookd	DESIGNED - TWO	REVISED -
		CHECKED - BHS	REVISED -
	PLOT SCALE = N/A	DRAWN - TWO	REVISED -
	PLOT DATE = 9/7/2011	CHECKED - GSP	REVISED -

STATE OF ILLINOIS
DEPARTMENT OF TRANSPORTATION

JUNCTION CHAMBER #2
REINFORCEMENT DETAILS (1 OF 2)

SHEET NO. OF SHEETS

F.A.I. RTE.	SECTION	COUNTY	TOTAL SHEETS	SHEET NO.
190	0102.5-T	COOK	41	30
		CONTRACT NO. 60F90		

FED. ROAD DIST. NO. 1 | ILLINOIS | FED. AID PROJECT

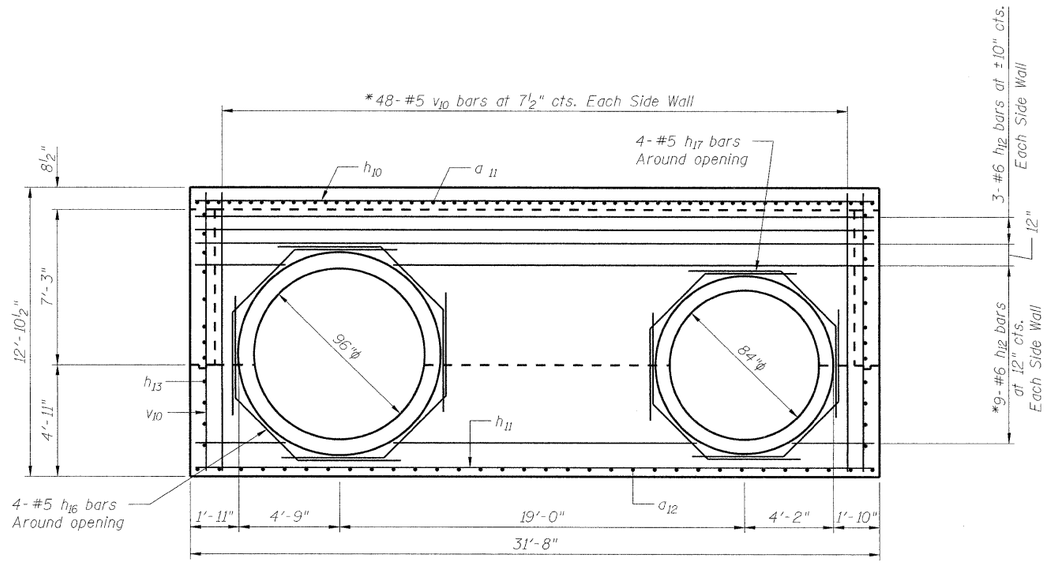

SIDE WALL SECTION

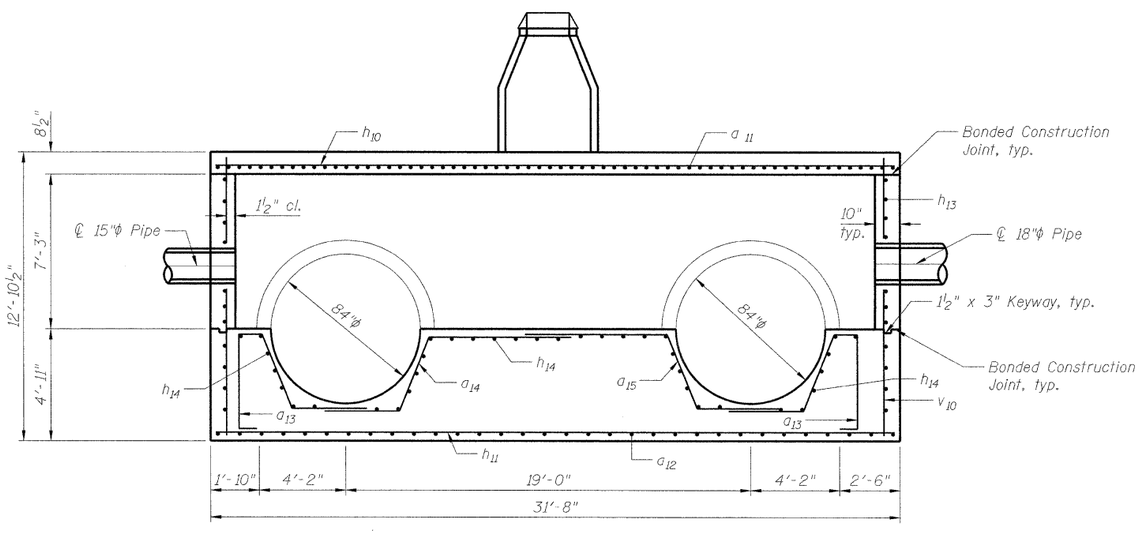

SECTION F-F

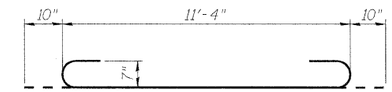

BAR a_{11}

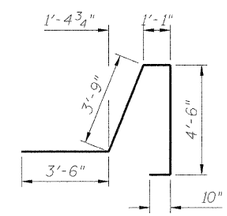

BAR a_{13}

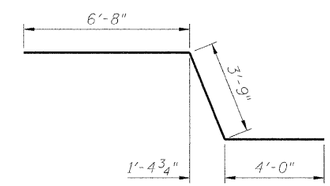

BAR a_{14}

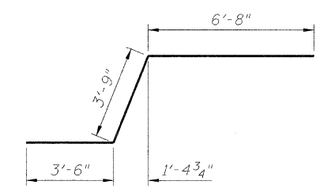

BAR a_{15}

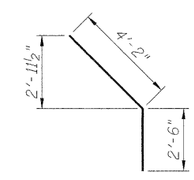

BAR h_{15}

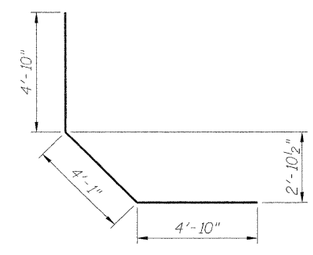

BAR h_{16}

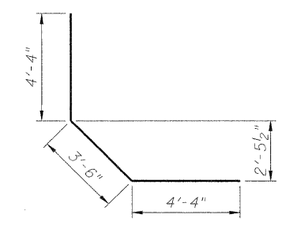

BAR h_{17}

*Cut bars to fit as required

BILL OF MATERIAL

Bar	No.	Size	Length	Shape
a_{11}	64	#7	13'-0"	
a_{12}	32	#6	11'-4"	
a_{13}	22	#5	13'-8"	
a_{14}	11	#5	14'-5"	
a_{15}	11	#5	13'-11"	
h_{10}	13	#6	31'-4"	
h_{11}	9	#5	31'-4"	
h_{12}	24	#6	31'-4"	
h_{13}	24	#6	11'-4"	
h_{14}	36	#5	9'-8"	
h_{15}	4	#5	6'-8"	
h_{16}	4	#5	13'-9"	
h_{17}	4	#5	12'-2"	
v_{10}	132	#5	12'-6"	

FILE NAME = g:\projects\2102155.011\cadd\structure\006.Box2.Reinforcement2.dgn

ENTRAN

USER NAME = 2bookd	DESIGNED - TWO	REVISED -	
	CHECKED - BHS	REVISED -	
PLOT SCALE = N/A	DRAWN - TWO	REVISED -	
PLOT DATE = 9/7/2011	CHECKED - GSP	REVISED -	

STATE OF ILLINOIS
DEPARTMENT OF TRANSPORTATION

JUNCTION CHAMBER #2
REINFORCEMENT DETAILS (2 OF 2)

SHEET NO. OF SHEETS

F.A.I. RTE.	SECTION	COUNTY	TOTAL SHEETS	SHEET NO.
190	0102.5-T	COOK	41	31
		CONTRACT NO. 60F90		
FED. ROAD DIST. NO. 1	ILLINOIS	FED. AID PROJECT		

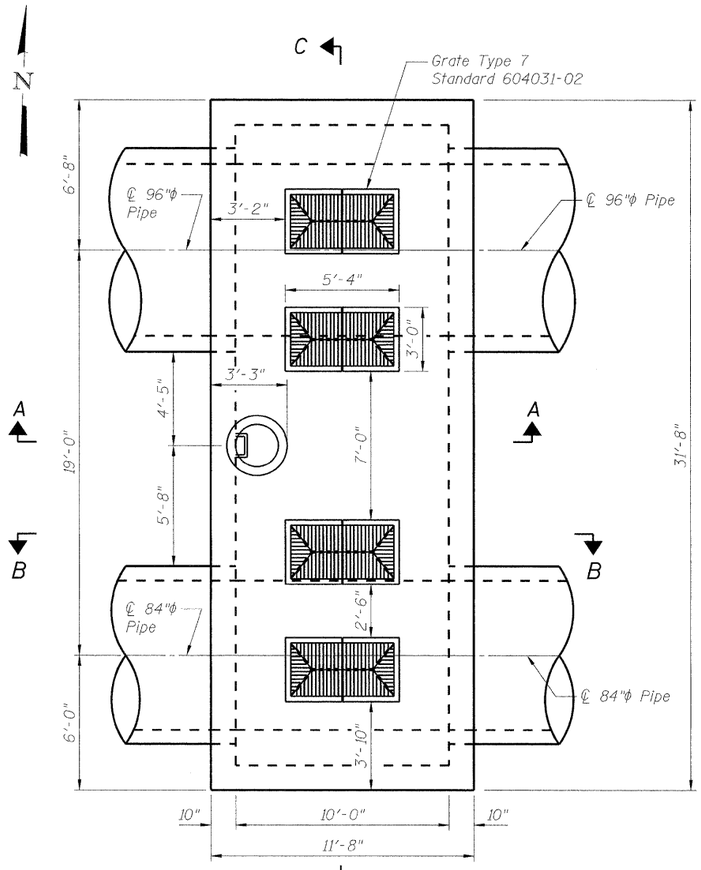

TOP PLAN

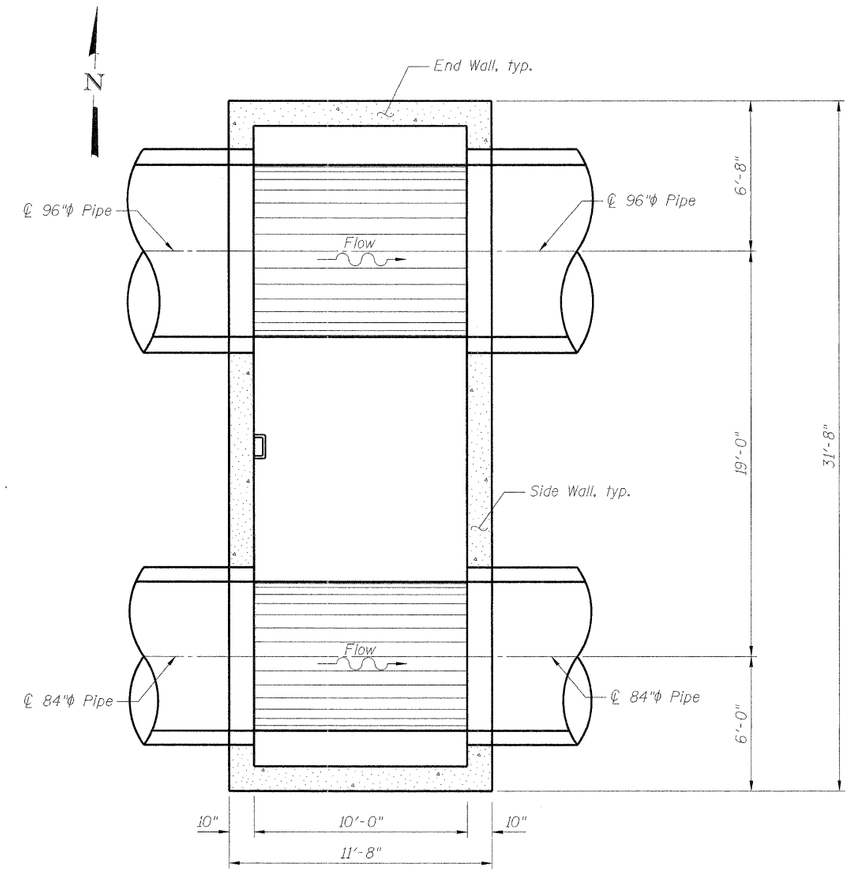

SECTIONAL PLAN

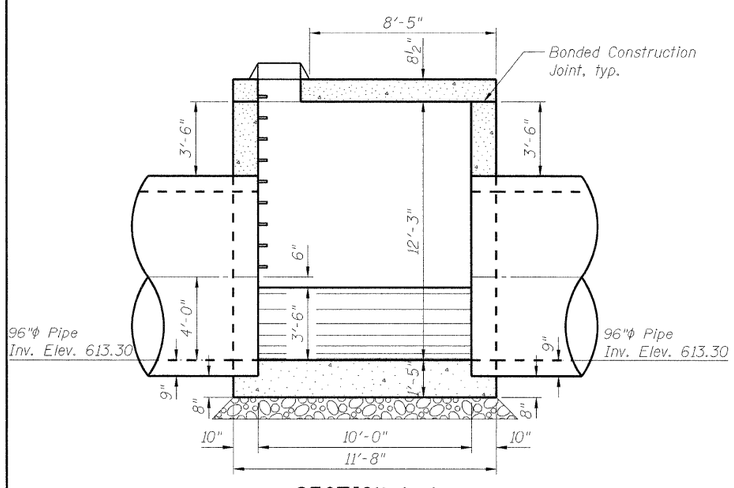

SECTION A-A

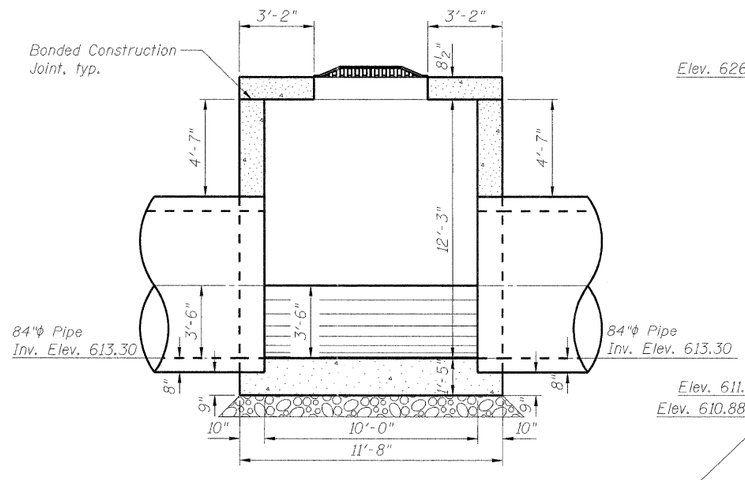

SECTION B-B

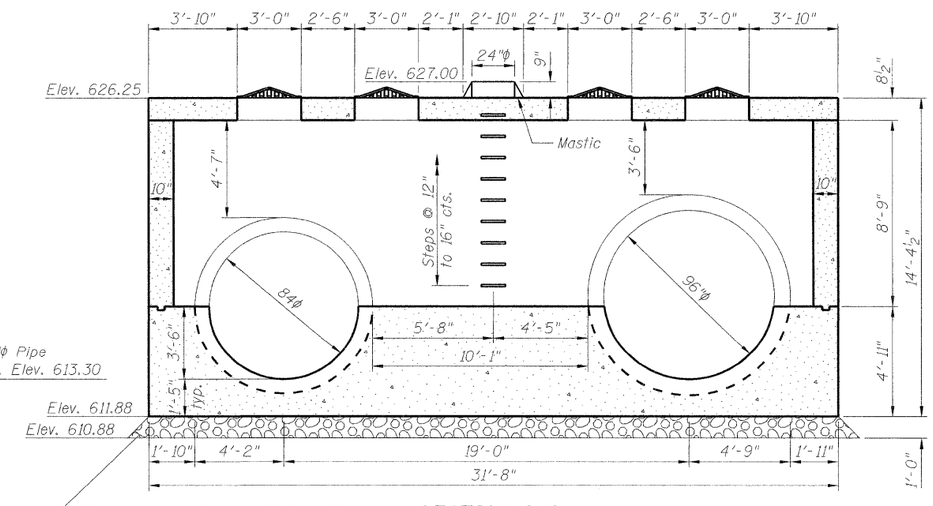

SECTION C-C

JUNCTION CHAMBER #3
BILL OF MATERIAL

Item	Unit	Total
Removal and Disposal of Unsuitable Material	Cu. Yds.	15
Porous Granular Embankment	Cu. Yds.	15
Concrete Structures	Cu. Yds.	75.4
Reinforcement Bars	Pound	7,030
Grates, Type 7	Each	4
Frames and Lids, Type 1, Closed Lid	Each	1
Braced Excavation	Cu. Yds.	334

NOTES

For additional information, see Standard Specifications.

For reinforcement details, see Sheets 33-34.

For Station and Offset, see Proposed Storm Sewer Plan and Profile.

The maximum width of excavation is the width of the junction chamber plus 4 feet, and the maximum length is the length of the junction chamber plus 4 feet. Excavation outside the maximum dimensions specified will not be measured for payment.

The design of the braced excavation is the responsibility of the Contractor. The Contractor shall submit drawings and design for the braced excavation to the Engineer for approval. The braced excavation design and drawings shall be signed and sealed by an Illinois licensed Structural Engineer, submitted and approved prior to the start of any work. The Engineer's approval shall not relieve the Contractor from the sole responsibility of the structural integrity of the braced excavation system.

All dimensions and elevations shall be verified prior to construction.

Concrete pipe sizes shall be coordinated with openings provided into junction chambers before pouring concrete.

Concrete cover for reinforcement steel to be 2" unless otherwise noted.

All concrete edges shall be chamfered 1 inch.

Concrete Compressive Strength fc'=3,500 psi.

Steel Yield Stength=60,000 psi.

FILE NAME = g:\project\2102155.011\road\structure\007_Box3_Dimensions.dgn

ENTRAN

USER NAME = 2bookd	DESIGNED - TWO	REVISED -	
	CHECKED - BHS	REVISED -	
PLOT SCALE = N/A	DRAWN - TWO	REVISED -	
PLOT DATE = 9/7/2011	CHECKED - GSP	REVISED -	

STATE OF ILLINOIS
DEPARTMENT OF TRANSPORTATION

JUNCTION CHAMBER #3
GENERAL PLAN AND ELEVATION

SHEET NO. OF SHEETS

F.A.I. RTE.	SECTION	COUNTY	TOTAL SHEETS	SHEET NO.
190	0102.5-T	COOK	41	32
		CONTRACT NO. 60F90		
FED. ROAD DIST. NO. 1	ILLINOIS	FED. AID PROJECT		

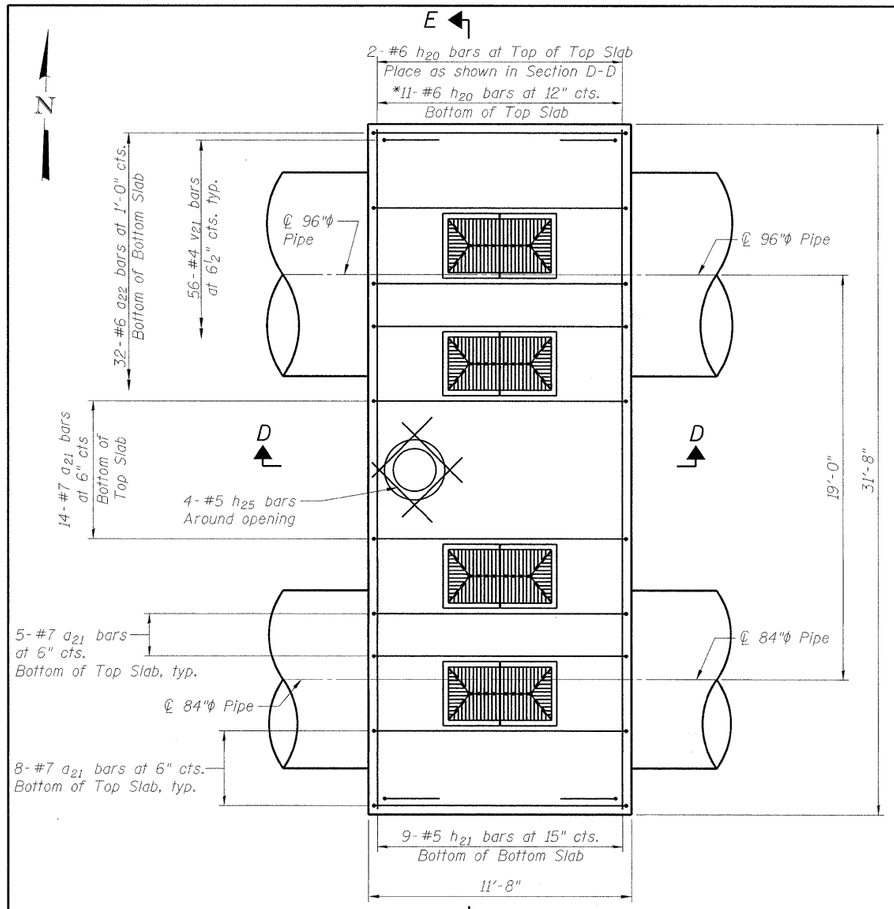

TOP PLAN

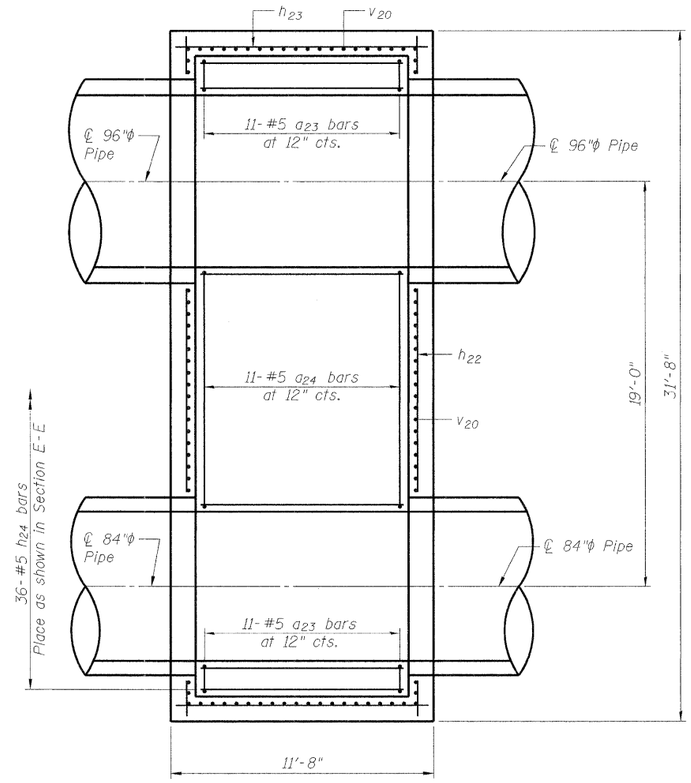

SECTIONAL PLAN

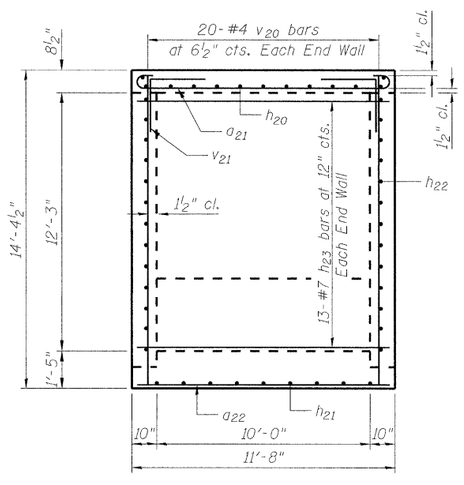

END WALL SECTION

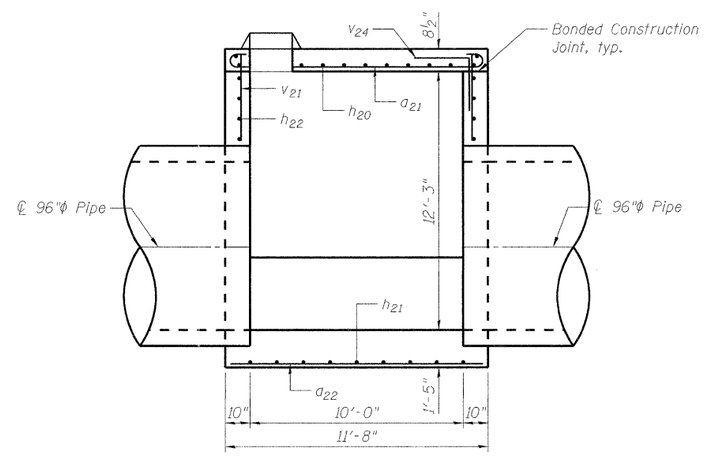

SECTION D-D

*Cut bars to fit as required

FILE NAME = g:\pr-0_jects\2182155.211\cadd\structure\008.Box3.Reinforcement1.dgn

ENTRAN	USER NAME = 2bookd	DESIGNED - TWO	REVISED -
		CHECKED - BHS	REVISED -
	PLOT SCALE = N/A	DRAWN - TWO	REVISED -
	PLOT DATE = 9/7/2011	CHECKED - GSP	REVISED -

STATE OF ILLINOIS
DEPARTMENT OF TRANSPORTATION

JUNCTION CHAMBER #3
REINFORCEMENT DETAILS (1 OF 2)

SHEET NO. OF SHEETS

F.A.I. RTE.	SECTION	COUNTY	TOTAL SHEETS	SHEET NO.
190	0102.5-T	COOK	41	33
		CONTRACT NO. 60F90		
FED. ROAD DIST. NO. 1	ILLINOIS	FED. AID PROJECT		

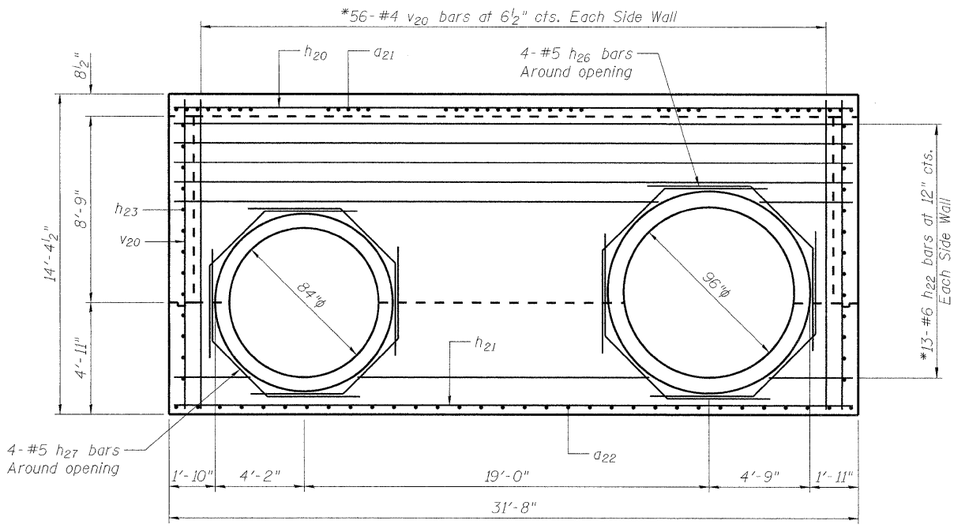

SIDE WALL SECTION

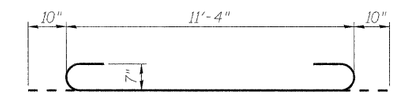

BAR a21

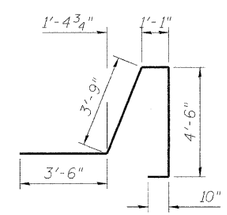

BAR a23

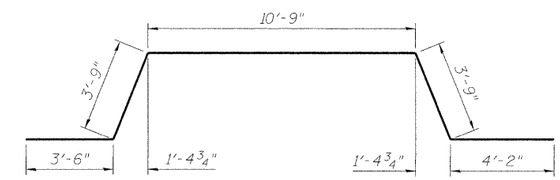

BAR a24

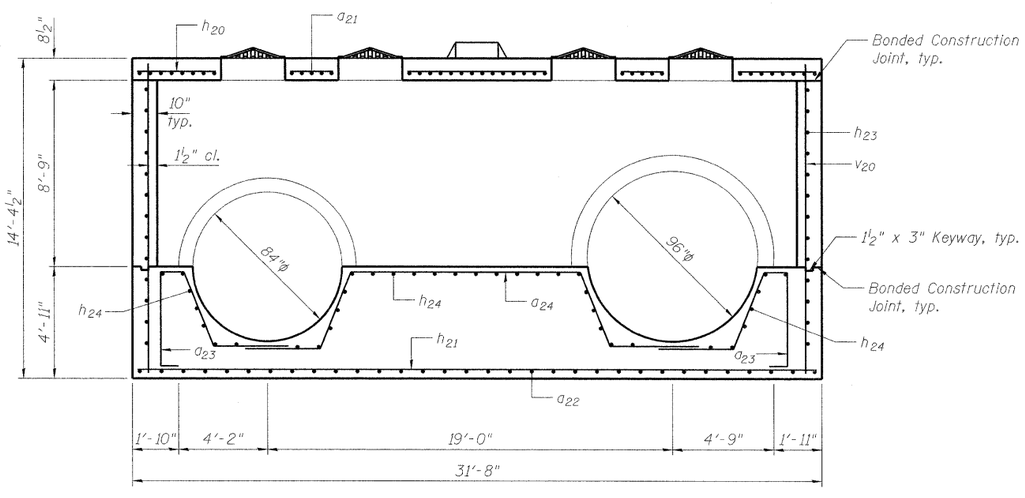

SECTION E-E

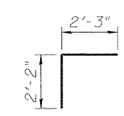

BAR v24

*Cut bars to fit as required

BILL OF MATERIAL

Bar	No.	Size	Length	Shape
a21	40	#7	13'-0"	
a22	32	#6	11'-4"	
a23	22	#5	13'-8"	
a24	11	#5	25'-11"	
h20	13	#6	31'-4"	
h21	9	#5	31'-4"	
h22	26	#6	31'-4"	
h23	26	#6	11'-4"	
h24	36	#5	9'-8"	
h25	4	#5	4'-0"	
h26	4	#5	13'-9"	
h27	4	#5	12'-2"	
v20	152	#4	14'-0"	
v21	112	#4	4'-5"	

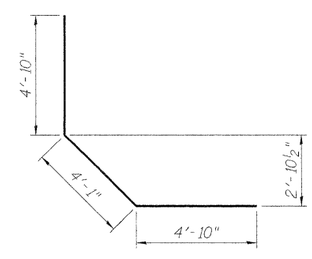

BAR h26

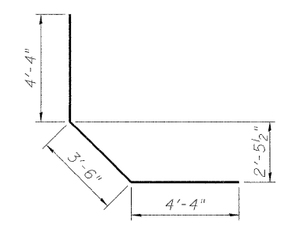

BAR h27

FILE NAME = g:\projects\2102155.011\cadd\structure\009-Box3-Reinforcement2.dgn

ENTRAN	USER NAME = 2bookd	DESIGNED - TWO	REVISED -	STATE OF ILLINOIS DEPARTMENT OF TRANSPORTATION	JUNCTION CHAMBER #3 REINFORCEMENT DETAILS (2 OF 2)	F.A.I. RTE.	SECTION	COUNTY	TOTAL SHEETS	SHEET NO.
		CHECKED - BHS	REVISED -			190	0102.5-T	COOK	41	34
	PLOT SCALE = N/A	DRAWN - TWO	REVISED -			CONTRACT NO. 60F90				
	PLOT DATE = 9/7/2011	CHECKED - GSP	REVISED -		SHEET NO. OF SHEETS	FED. ROAD DIST. NO. 1	ILLINOIS	FED. AID PROJECT		

Geo Services, Inc.
Geotechnical, Environmental & Civil Engineering
805 Antoine Drive, Suite 204
Naperville, Illinois 60563
(630) 355-3838

SOIL BORING LOG

PAGE 1 of 1
DATE 5/6/2011
LOGGED BY RJ
GSI JOB No. 10181-B

ROUTE F.A. 122 (IL 394) DESCRIPTION Wing Wall Repair – Illinois 394 South Of Barnes Road
SECTION 2010-67-T LOCATION SEC. 27, T34 N., R 14 E., CRETE TOWNSHIP, 3rd P.M.
COUNTY Will DRILLING METHOD 2.25" Hollow Stem Auger HAMMER TYPE CME Automatic

STRUCT. NO. 099-0517
Station --
BORING NO. SB-02
Station 162+73
Offset 241.6' Right
Ground Surface Elev. 637.8

Surface Water Elev. n/a
Stream Bed Elev. n/a
Groundwater Elevation:
First Encounter Dry
Upon Completion Dry
After ___ Hrs. ___

Description	Elev.	DEPTH (ft)	BLOWS /6"	UCS Qu (tsf)	MOIST (%)
8.0" TOPSOIL-black	637.9				
CLAY-brown & gray- stiff to hard (A-6)			AS / 3	–	24 / 104
			4 / 6	3.4B	21
			2 / 4	1.0B	17 / 108
			2 / 3		114
			7 / 11	7.0B	16 / 116
	629.8				
CLAY to CLAY LOAM-gray- stiff to hard (A-6)			4 / 6		109
		-10	10	6.4B	18
			2 / 5		105
			10	3.5B	20
			3 / 5		111
		-15	7	2.25B	18
			3 / 5		118
			9	4.6B	16
			2 / 3		111
		-20	6	2.75B	18

CLAY to CLAY LOAM-gray- stiff to hard (A-6)
End Of Boring @ -25.0'
Hollow Stem Augers
CME Automatic Hammer

Description	Elev.	DEPTH (ft)	BLOWS /6"	UCS Qu (tsf)	MOIST (%)
			2		109
			4 / 5	1.6B	18
			4		114
			8		
	612.8	-25	10	4.4B	15
			4 / 6		109
		-30			
			2 / 5		105
			10	3.5B	20
			3 / 5		111
		-35			
			3 / 6		106
			8		
			9	5.5B	20
			3 / 3		126
		-40			

The Unconfined Compressive Strength (UCS) Failure Mode is indicated by (B-Bulge, S-Shear, P-Penetrometer) ST-Shelby Tube Sample VS-Vane Shear Test
The SPT (N value) is the sum of the last two blow values in each sampling zone (AASHTO T206) The Unit Dry Weight (pcf) is noted in italics above moist (%)
NR-No Recovery

SOIL BORING LOG

PAGE 1 of 1
DATE 5/6/2011
LOGGED BY RJ
GSI JOB No. 10181-B

ROUTE F.A. 122 (IL 394) DESCRIPTION Wing Wall Repair – Illinois 394 South Of Barnes Road
SECTION 2010-67-T LOCATION SEC. 27, T34 N., R 14 E., CRETE TOWNSHIP, 3rd P.M.
COUNTY Will DRILLING METHOD 2.25" Hollow Stem Auger HAMMER TYPE CME Automatic

STRUCT. NO. 099-0517
Station --
BORING NO. SB-03
Station 165+59
Offset 271.1' Right
Ground Surface Elev. 638.9

Surface Water Elev. n/a
Stream Bed Elev. n/a
Groundwater Elevation:
First Encounter Dry
Upon Completion Dry
After ___ Hrs. ___

Description	Elev.	DEPTH (ft)	BLOWS /6"	UCS Qu (tsf)	MOIST (%)
6.0" TOPSOIL-black	638.4		AS / 2	–	21
SILTY CLAY-dark gray to black- very stiff (A-6) Wet			4 / 5	2.0P	26
	635.9				
CLAY-brown & gray- hard (A-6)			2 / 3		108
		-5	6	4.2B	21
			4 / 8		110
		-10	13	8.1B	18
			4 / 8		109
		-10	16	7.8B	19
	628.4				
CLAY to CLAY LOAM-gray- very stiff to hard (A-6)			3 / 6		112
			10	5.2B	18
			4 / 8		108
		-15	12	4.5B	22
			3 / 6		106
			8		
			9	5.5B	20
			3 / 3		126
		-20	6	2.0B	12

CLAY to CLAY LOAM-gray- very stiff to hard (A-6)

Description	Elev.	DEPTH (ft)	BLOWS /6"	UCS Qu (tsf)	MOIST (%)
			4 / 8		122
			12	6.4B	12
			6 / 10		114
			15	5.2B	18
	613.9	-25			
			4 / 6		109
		-30			
			3 / 6		112
			10	5.2B	18
			4 / 8		108
		-35			
			3 / 6		106
			8		
			9	5.5B	20
			3 / 3		126
		-40			

The Unconfined Compressive Strength (UCS) Failure Mode is indicated by (B-Bulge, S-Shear, P-Penetrometer) ST-Shelby Tube Sample VS-Vane Shear Test
The SPT (N value) is the sum of the last two blow values in each sampling zone (AASHTO T206) The Unit Dry Weight (pcf) is noted in italics above moist (%)
NR-No Recovery

SOIL BORING LOG

PAGE 1 of 1
DATE 5/9/2011
LOGGED BY RJ
GSI JOB No. 10181-B

ROUTE F.A. 122 (IL 394) DESCRIPTION Wing Wall Repair – Illinois 394 South Of Barnes Road
SECTION 2010-67-T LOCATION SEC. 27, T34 N., R 14 E., CRETE TOWNSHIP, 3rd P.M.
COUNTY Will DRILLING METHOD 2.25" Hollow Stem Auger HAMMER TYPE CME Automatic

STRUCT. NO. 099-0517
Station --
BORING NO. SB-04
Station 170+95
Offset 287.6' Right
Ground Surface Elev. 638.9

Surface Water Elev. n/a
Stream Bed Elev. n/a
Groundwater Elevation:
First Encounter Dry
Upon Completion Dry
After ___ Hrs. ___

Description	Elev.	DEPTH (ft)	BLOWS /6"	UCS Qu (tsf)	MOIST (%)
10.0" TOPSOIL-black	639.0		AS / 5	–	20
SILTY CLAY-dark gray to black- very stiff (A-6) Wet			7 / 10	2.5P	25
	638.9				
CLAY-brown & gray- very stiff to hard (A-6)			3 / 4		106
		-5	7	2.1B	20
			2 / 3		106
			6	3.4B	20
			3 / 6		110
		-10	8	6.5B	18
	626.9				
CLAY to CLAY LOAM-gray- stiff to hard (A-6)			3 / 7		105
		-15	7	2.6B	22
			2 / 3		96
			6	1.5B	26
			5 / 9		
		-20	9	4.5P	28

CLAY to CLAY LOAM-gray- stiff to hard (A-6)

Description	Elev.	DEPTH (ft)	BLOWS /6"	UCS Qu (tsf)	MOIST (%)
			2 / 6		116
			6	3.8B	15
			4 / 6		120
			8	4.1B	15
		-25			
			4 / 6		119
			14	5.9B	17
			4 / 17		
	609.9	-30	24	3.0P	16

End Of Boring @ -30.0'
Hollow Stem Augers
CME Automatic Hammer

Drillers Note:
This boring was offset 3.0' north and 2.0' west of it's original staked location due to unknown obstructions.

Description	Elev.	DEPTH (ft)	BLOWS /6"	UCS Qu (tsf)	MOIST (%)
			2 / 4		105
			7	2.3B	22
		-35			
			2 / 3		97
			5	2.2B	27
		-40			

The Unconfined Compressive Strength (UCS) Failure Mode is indicated by (B-Bulge, S-Shear, P-Penetrometer) ST-Shelby Tube Sample VS-Vane Shear Test
The SPT (N value) is the sum of the last two blow values in each sampling zone (AASHTO T206) The Unit Dry Weight (pcf) is noted in italics above moist (%)
NR-No Recovery

SOIL BORING LOG

PAGE 1 of 1
DATE 4/28/2011
LOGGED BY RJ
GSI JOB No. 10181-B

ROUTE F.A. 122 (IL 394) DESCRIPTION Wing Wall Repair – Illinois 394 South Of Barnes Road
SECTION 2010-67-T LOCATION SEC. 27, T34 N., R 14 E., CRETE TOWNSHIP, 3rd P.M.
COUNTY Will DRILLING METHOD 2.25" Hollow Stem Auger HAMMER TYPE CME Automatic

STRUCT. NO. 099-0517
Station --
BORING NO. SB-05
Station 174+24
Offset 262.1' Right
Ground Surface Elev. 636.2

Surface Water Elev. n/a
Stream Bed Elev. n/a
Groundwater Elevation:
First Encounter Dry
Upon Completion Dry
After ___ Hrs. ___

Description	Elev.	DEPTH (ft)	BLOWS /6"	UCS Qu (tsf)	MOIST (%)
8.0" TOPSOIL-black	637.4		AS / 3	–	29 / 98
CLAY-brown & gray- very stiff to hard (A-6)			5 / 7	2.25B / 11.3B	24
			3 / 6		107
		-5	8	5.0B	18
			5 / 10		108
			17	7.25B	17
			11 / 6	6.35B	106
		-10	15	11.3B	21
	627.7				
CLAY-gray- very stiff to hard (A-6)			2 / 4		105
			7	2.3B	22
			2 / 3		97
		-15	5	2.2B	27
			4 / 7		118
			10	4.6B	14
			4 / 6		117
		-20	14	6.0B	15

CLAY-gray- very stiff to hard (A-6)

Description	Elev.	DEPTH (ft)	BLOWS /6"	UCS Qu (tsf)	MOIST (%)
			4 / 8		118
			12	4.4B	17
			4 / 9		114
			13	5.7B	16
	612.7				
SILTY LOAM-gray-very dense (A-4)			22 / 39		
			50/1"	NP	13
			50/1"		
	608.2	-30		NP	12

End Of Boring @ -30.0'
Hollow Stem Augers
CME Automatic Hammer

The Unconfined Compressive Strength (UCS) Failure Mode is indicated by (B-Bulge, S-Shear, P-Penetrometer) ST-Shelby Tube Sample VS-Vane Shear Test
The SPT (N value) is the sum of the last two blow values in each sampling zone (AASHTO T206) The Unit Dry Weight (pcf) is noted in italics above moist (%)
NR-No Recovery

SOIL BORING LOG

PAGE 1 of 1
DATE 4/28/2011
LOGGED BY RJ
GSI JOB No. 10181-B

ROUTE F.A. 122 (IL 394) DESCRIPTION Wing Wall Repair – Illinois 394 South Of Barnes Road
SECTION 2010-67-T LOCATION SEC. 27, T34 N., R 14 E., CRETE TOWNSHIP, 3rd P.M.
COUNTY Will DRILLING METHOD 2.25" Hollow Stem Auger HAMMER TYPE CME Automatic

STRUCT. NO. 099-0517
Station --
BORING NO. SB-06
Station 176+52
Offset 244.4' Right
Ground Surface Elev. 637.7

Surface Water Elev. n/a
Stream Bed Elev. n/a
Groundwater Elevation:
First Encounter 625.2
Upon Completion 631.7
After ___ Hrs. ___

Description	Elev.	DEPTH (ft)	BLOWS /6"	UCS Qu (tsf)	MOIST (%)
10.0" TOPSOIL-black	626.8		AS / 8	–	23
SANDY CLAY LOAM-black- medium dense (Fill)			8	2.0P	13
	624.7				
CRUSHED ASPHALT-dense (Fill)			14 / 24		
		-5	27	NP	7
			10 / 20		
			24	NP	6
			17 / 22		
		-10	24	NP	8
			13 / 15		
	625.2		17	NP	9
CLAY-brown & gray- very stiff to hard (A-6)			4 / 5		102
		-15	6	2.5B	22
			4 / 6		112
			10	4.1B	18
			6 / 10		102
		-20	14	3.75B	20

CLAY-brown & gray (A-6) 617.2

Description	Elev.	DEPTH (ft)	BLOWS /6"	UCS Qu (tsf)	MOIST (%)
			6 / 14		108
			18	4.6B	21
CLAY-gray- very stiff to hard (A-6)			4 / 7		98
		-25	10	2.0B	29
			3 / 8		98
			9	2.3B	27
			5 / 9		112
		-30	14	3.6B	15

End Of Boring @ -30.0'
Hollow Stem Augers
CME Automatic Hammer

Description	Elev.	DEPTH (ft)	BLOWS /6"	UCS Qu (tsf)	MOIST (%)
			2 / 4		105
			7	2.3B	22
		-35			
			2 / 3		97
			5	2.2B	27
		-40			

The Unconfined Compressive Strength (UCS) Failure Mode is indicated by (B-Bulge, S-Shear, P-Penetrometer) ST-Shelby Tube Sample VS-Vane Shear Test
The SPT (N value) is the sum of the last two blow values in each sampling zone (AASHTO T206) The Unit Dry Weight (pcf) is noted in italics above moist (%)
NR-No Recovery

SOIL BORING LOG

PAGE 1 of 1
DATE 4/28/2011
LOGGED BY RJ
GSI JOB No. 10181-B

ROUTE F.A. 122 (IL 394) DESCRIPTION Wing Wall Repair – Illinois 394 South Of Barnes Road
SECTION 2010-67-T LOCATION SEC. 27, T34 N., R 14 E., CRETE TOWNSHIP, 3rd P.M.
COUNTY Will DRILLING METHOD 2.25" Hollow Stem Auger HAMMER TYPE CME Automatic

STRUCT. NO. 099-0517
Station --
BORING NO. SB-07
Station 180+41
Offset 217.7' Right
Ground Surface Elev. 638.1

Surface Water Elev. n/a
Stream Bed Elev. n/a
Groundwater Elevation:
First Encounter Dry
Upon Completion Dry
After ___ Hrs. ___

Description	Elev.	DEPTH (ft)	BLOWS /6"	UCS Qu (tsf)	MOIST (%)
12.0" TOPSOIL-black	637.1		AS / 3	–	24 / 105
SILTY CLAY to CLAY-brown & gray- stiff (A-6)			5 / 8	1.8B	23
			3 / 2		
		-5	4	1.5P	22
			2 / 2		104
			4	1.3B	23
	630.1				
CLAY LOAM-brown & gray- hard (A-6)			5 / 11		120
		-10	11	5.0B	14
	627.6				
CLAY-gray- stiff to hard (A-6)			5 / 6		118
			7	2.6B	14
			3 / 9		102
		-15	12	4.7B	23
			3 / 8		117
			8	2.5B	15
			4 / 8		115
		-20	8	2.0B	16

CLAY-gray- stiff to hard (A-6)

Description	Elev.	DEPTH (ft)	BLOWS /6"	UCS Qu (tsf)	MOIST (%)
			2 / 4		118
			4	1.2B	16
			2 / 3		114
		-25	5	2.0B	16
			2 / 6		113
			7	1.2B	18
	610.1				
SILTY LOAM-gray-medium dense (A-4)			3 / 5		
		-30	10	NP	13
	608.1				
End Of Boring @ -30.0' Hollow Stem Augers CME Automatic Hammer					
		-35			
		-40			

The Unconfined Compressive Strength (UCS) Failure Mode is indicated by (B-Bulge, S-Shear, P-Penetrometer) ST-Shelby Tube Sample VS-Vane Shear Test
The SPT (N value) is the sum of the last two blow values in each sampling zone (AASHTO T206) The Unit Dry Weight (pcf) is noted in italics above moist (%)
NR-No Recovery

SOIL BORING LOG

PAGE 1 of 1
DATE 4/29/2011
LOGGED BY RJ
GSI JOB No. 10181-B

ROUTE F.A. 122 (IL 394) DESCRIPTION Wing Wall Repair – Illinois 394 South Of Barnes Road
SECTION 2010-67-T LOCATION SEC. 27, T34 N., R 14 E., CRETE TOWNSHIP, 3rd P.M.
COUNTY Will DRILLING METHOD 2.25" Hollow Stem Auger HAMMER TYPE CME Automatic

STRUCT. NO. 099-0517
Station --
BORING NO. SB-08
Station 183+69
Offset 228.7' Right
Ground Surface Elev. 636.6

Surface Water Elev. n/a
Stream Bed Elev. n/a
Groundwater Elevation:
First Encounter 619.1
Upon Completion 623.1
After ___ Hrs. ___

Description	Elev.	DEPTH (ft)	BLOWS /6"	UCS Qu (tsf)	MOIST (%)
6.0" TOPSOIL with Gravel-black	636.1		AS / 4	–	9
SAND & GRAVEL-dark brown- loose to medium dense (Fill)			5 / 6	NP	10
			2 / 2		
		-5	4	NP	13
	631.1				
CLAY-brown & gray-hard (A-6)			1 / 3		
			4	4.5+P	19
	628.6				
CLAY-gray- stiff to hard (A-6)			8 / 10	6.5SB / 11.3B	19
			2 / 4		108
			3	3.2B	19
			2 / 3		99
		-15	5	1.6B	25
			13 / 11		
			6	–	14
			4 / 6		112
		-20	9	2.9B	15

CLAY-gray- stiff to hard (A-6)

Description	Elev.	DEPTH (ft)	BLOWS /6"	UCS Qu (tsf)	MOIST (%)
			4 / 8		116
			10	2.8B	16
			4 / 10		116
		-25	16	3.8B	16
	611.1				
SILT-gray-dense (A-4)			14 / 22		
			24	NP	14
			22 / 24		
		-30	28	NP	15
	606.6				
End Of Boring @ -30.0' Hollow Stem Augers CME Automatic Hammer					
		-35			
		-40			

The Unconfined Compressive Strength (UCS) Failure Mode is indicated by (B-Bulge, S-Shear, P-Penetrometer) ST-Shelby Tube Sample VS-Vane Shear Test
The SPT (N value) is the sum of the last two blow values in each sampling zone (AASHTO T206) The Unit Dry Weight (pcf) is noted in italics above moist (%)
NR-No Recovery

SOIL BORING LOG

PAGE 1 of 1
DATE 4/29/2011
LOGGED BY RJ
GSI JOB No. 10181-B

ROUTE FAI 190 DESCRIPTION Pump Station 24 – Discharge Sewer Pipe, Work Order No. 2
SECTION 0102.5-T LOCATION SEC. 3 & 4, T 40 N., R 12 E., LEYDEN TOWNSHIP, 3rd P.M.
COUNTY Cook DRILLING METHOD 2.25" Hollow Stem Auger HAMMER TYPE CME Automatic

STRUCT. NO. --
Station --
BORING NO. SB-09
Station 189+94
Offset 178.5' Right
Ground Surface Elev. 636.3

Surface Water Elev. n/a
Stream Bed Elev. n/a
Groundwater Elevation:
First Encounter Dry
Upon Completion Dry
After ___ Hrs. ___

Description	Elev.	DEPTH (ft)	BLOWS /6"	UCS Qu (tsf)	MOIST (%)
8.0" TOPSOIL-black	635.5		AS / 3	–	34 / 105
CLAY-brown & gray-very stiff (A-6)			5 / 6	2.6B	22
			3		106
		-5	6	3.1B	21
	630.8				
SANDY LOAM-dark brown- very loose (A-2)			1 / 1		
			1	NP	24
	628.3				
CLAY-brown & gray- very stiff to hard (A-6)			2 / 4		104
		-10	8	3.5B	22
			3		105
			8 / 11	7.25B	22
	623.3				
CLAY LOAM-brown & gray- stiff (A-6)			5 / 4		114
		-15	6	1.4B	14
	620.8				
CLAY LOAM-gray- very stiff to hard (A-6)			3 / 6		116
			8	3.5B	15
			4 / 5		114
		-20	8	3.6B	15

CLAY LOAM-gray- very stiff to hard (A-6)

Description	Elev.	DEPTH (ft)	BLOWS /6"	UCS Qu (tsf)	MOIST (%)
			3 / 6		116
			9	3.0B	16
			5 / 9		116
		-25	11	4.5B	16
			5 / 17		119
			21	5.3B	18
	609.3				
SILT-gray-very dense (A-4)			27 / 32		
		-30	36	NP	15
	606.3				
End Of Boring @ -30.0' Hollow Stem Augers CME Automatic Hammer					
		-35			
		-40			

The Unconfined Compressive Strength (UCS) Failure Mode is indicated by (B-Bulge, S-Shear, P-Penetrometer) ST-Shelby Tube Sample VS-Vane Shear Test
The SPT (N value) is the sum of the last two blow values in each sampling zone (AASHTO T206) The Unit Dry Weight (pcf) is noted in italics above moist (%)
NR-No Recovery

FILE NAME = g:\projects\2012\155.01\cadd\civil\sht\0160F90-31sht-sbloga01.dgn

ENTRAN

USER NAME = 2bookd	DESIGNED - DJB	REVISED -	
	DRAWN - ENTRAN	REVISED -	
PLOT SCALE = 20.00 ' / IN.	CHECKED - DAK	REVISED -	
PLOT DATE = 9/7/2011	DATE - 09/07/11	REVISED -	

STATE OF ILLINOIS
DEPARTMENT OF TRANSPORTATION

PUMP STATION 24 STORM SEWER IMPROVEMENTS
SOIL BORING LOGS

SCALE: 20.00 ' / IN. | SHEET NO. OF SHEETS | STA. TO STA.

F.A.I. RTE.	SECTION	COUNTY	TOTAL SHEETS	SHEET NO.
190	0102.5-T	COOK	41	35
		CONTRACT NO. 60F90		

FED. ROAD DIST. NO. 1 | ILLINOIS | FED. AID PROJECT

Geo Services, Inc.
Geotechnical, Environmental and Civil Engineering
805 Jefferson Street, Suite 204
Naperville, Illinois 60540
(630) 305-3838

SOIL BORING LOG

PAGE 1 of 1
DATE 5/2/2011
LOGGED BY MD
GSI JOB No. 10181-B

ROUTE F.A. 122 (IL 394) DESCRIPTION Wing Wall Repair – Illinois 394 South Of Barnes Road
SECTION 2010-67-T LOCATION SEC. 27, T34 N., R 14 E., CRETE TOWNSHIP, 3rd P.M.
COUNTY Will DRILLING METHOD 2.25" Hollow Stem Auger HAMMER TYPE CME Automatic

STRUCT. NO. 099-0517
Station ---
BORING NO. **SB-10**
Station 192+11
Offset 119.0' Right
Ground Surface Elev. 645.8

Surface Water Elev. n/a
Stream Bed Elev. n/a
Groundwater Elevation:
First Encounter 620.8
Upon Completion Cave In
After ___ Hrs.

Description	Elev.	DEPTH (ft)	BLOWS (/6")	UCS Qu (tsf)	MOIST (%)
8.0" TOPSOIL-black	645.0				
CLAY TO CLAY LOAM-brown & gray spotted black-stiff to hard (A-6) Fill			AS –		24
			5		
			8		
			10	4.5+P	16
			3		116
			7		
		–5	9	5.9B	17
			3		103
			3		
			6	1.9B	22
	630.3				
SILTY CLAY-dark brown & gray-stiff to very stiff (A-6) Wet			3		94
			4		
			6	2.2B	26
			2		102
			3		
		–20	3	1.6B	24
CLAY-brown & gray-hard (A-6)	622.8				
Clayey SAND & GRAVEL-gray-medium dense to dense (A-2)	617.8				
CLAY LOAM-gray-stiff to hard (A-6)	608.8				
SILTY CLAY LOAM-gray-medium dense (A-4)	605.8	–40			
End Of Boring @ –40.0' Hollow Stem Augers CME Automatic Hammer					

Description	Elev.	DEPTH (ft)	BLOWS (/6")	UCS Qu (tsf)	MOIST (%)
SILTY CLAY-stiff to very stiff (A-6)	625.3				
			4		109
			9		
			11	6.0B	19
			13		
			19		
		–25	11	–	10
			7		
			9		
			13	–	12
			3		
			3		
		–30	3	1.25P	15
			2		118
			4		
			6	2.3B	19
			5		113
			7		
		–35	9	4.1B	18
			5		111
			10		
			12	3.5B	19
			7		111
			9		
		–40	13	7.4B	17

The Unconfined Compressive Strength (UCS) Failure Mode is indicated by (B-Bulge, S-Shear, P-Penetrometer) ST-Shelby Tube Sample VS-Vane Shear Test
The SPT (N value) is the sum of the last two blow values in each sampling zone (AASHTO T206) The Unit Dry Weight (pcf) is noted in italics above moist (%)
NR-No Recovery

Geo Services, Inc.
Geotechnical, Environmental and Civil Engineering
805 Jefferson Street, Suite 204
Naperville, Illinois 60540
(630) 305-3838

SOIL BORING LOG

PAGE 1 of 1
DATE 5/2/2011
LOGGED BY MD
GSI JOB No. 10181-B

ROUTE F.A. 122 (IL 394) DESCRIPTION Wing Wall Repair – Illinois 394 South Of Barnes Road
SECTION 2010-67-T LOCATION SEC. 27, T34 N., R 14 E., CRETE TOWNSHIP, 3rd P.M.
COUNTY Will DRILLING METHOD 2.25" Hollow Stem Auger HAMMER TYPE Diedrich Automatic

STRUCT. NO. 099-0517
Station ---
BORING NO. **SB-11**
Station 194+73
Offset 109.0' Right
Ground Surface Elev. 644.4

Surface Water Elev. n/a
Stream Bed Elev. n/a
Groundwater Elevation:
First Encounter Dry
Upon Completion Dry
After ___ Hrs.

Description	Elev.	DEPTH (ft)	BLOWS (/6")	UCS Qu (tsf)	MOIST (%)
10.0" TOPSOIL-black	643.5				
CLAY TO CLAY LOAM-brown & gray spotted black-stiff to very stiff (A-6) Fill			AS –		29
			5		110
			4		
			5	3.3B	18
			2		108
			4		
		–5	6	3.6B	18
			3		96
			3		
			5	1.9B	27
	636.4				
CLAY-brown & gray-hard (A-6)			2		108
			6		
		–10	6	5.5B	19
			6		109
			10		
			15	8.4B	20
			6		106
			8		
		–15	18	8.8B	22
			6		106
			9		
			13	7.4B	21
	626.4				
CLAY LOAM-gray-hard (A-6)			6		116
			8		
		–20	10	4.2B	15
CLAY LOAM-gray-hard (A-6)			5		116
			6		
			9	5.2B	15
			8		116
			10		
		–25	12	4.6B	16
			8		114
			8		
			10	5.0B	17
	616.4				
SILTY CLAY LOAM-gray-medium dense (A-4)			9		
			9		
		–30	11	4.5+P	15
	612.4				
SILTY CLAY TO CLAY-gray-hard (A-6)			9		
			11		
		–35	14	4.5+P	18
	607.4				
SILTY LOAM TO SILT-gray-medium dense (A-4)			8		
			10		
			13	4.5+P	17
End Of Boring @ –40.0' Hollow Stem Augers Diedrich Automatic Hammer	604.4	–40	13	9.9B	14

The Unconfined Compressive Strength (UCS) Failure Mode is indicated by (B-Bulge, S-Shear, P-Penetrometer) ST-Shelby Tube Sample VS-Vane Shear Test
The SPT (N value) is the sum of the last two blow values in each sampling zone (AASHTO T206) The Unit Dry Weight (pcf) is noted in italics above moist (%)
NR-No Recovery

Geo Services, Inc.
Geotechnical, Environmental and Civil Engineering
805 Jefferson Street, Suite 204
Naperville, Illinois 60540
(630) 305-3838

SOIL BORING LOG

PAGE 1 of 1
DATE 5/3/2011
LOGGED BY MD
GSI JOB No. 10181-B

ROUTE F.A. 122 (IL 394) DESCRIPTION Wing Wall Repair – Illinois 394 South Of Barnes Road
SECTION 2010-67-T LOCATION SEC. 27, T34 N., R 14 E., CRETE TOWNSHIP, 3rd P.M.
COUNTY Will DRILLING METHOD 2.25" Hollow Stem Auger HAMMER TYPE CME Automatic

STRUCT. NO. 099-0517
Station ---
BORING NO. **SB-12**
Station 196+81
Offset 101.1' Right
Ground Surface Elev. 646.3

Surface Water Elev. n/a
Stream Bed Elev. n/a
Groundwater Elevation:
First Encounter 625.3
Upon Completion 625.3
After ___ Hrs.

Description	Elev.	DEPTH (ft)	BLOWS (/6")	UCS Qu (tsf)	MOIST (%)
TOPSOIL-black			AS –		17
			4		
			4		
			7	–	25
	637.3				
SILTY CLAY LOAM-brown & gray-medium dense (A-4)			2		
			4		
		–5	6	2.0P	22
	634.8				
CLAY-brown & gray-hard (A-6)			3		107
			6		
			11	6.6B	20
			4		116
			8		
		–10	14	8.7SB	18
	629.8				
CLAY-gray-very stiff (A-6)			4		
			5		
			6	2.5P	19
	627.3				
SAND & GRAVEL-gray-medium dense (A-1)			5		
			5		
	625.3	–15	7	NP	12
CLAY-gray-stiff to very stiff (A-6)			7		117
			7		
			9	1.2B	13
			3		115
			4		
		–20	6	1.9B	14
CLAY-gray-stiff to very stiff (A-6)			4		102
			7		
			14	3.5B	19
	612.3				
SILTY CLAY LOAM-gray-dense (A-4)			10		116
			15	5.5SB	
		–25	17	14.1%	18
	614.8				
SILT-gray-dense to very dense (A-4)			22		
			24		
			28	NP	15
			20		
			22		
		–30	22	NP	17
			14		
			30		
			50/1"	NP	16
			18		
			35		
		–35	50/1"	NP	18
			22		
			50/6"		
				NP	16
	602.3				
CLAY LOAM-hard (A-6) End Of Boring @ –40.0' Hollow Stem Augers CME Automatic Hammer			7		124
			9	5.1SB	
		–40	14	14.1%	10

The Unconfined Compressive Strength (UCS) Failure Mode is indicated by (B-Bulge, S-Shear, P-Penetrometer) ST-Shelby Tube Sample VS-Vane Shear Test
The SPT (N value) is the sum of the last two blow values in each sampling zone (AASHTO T206) The Unit Dry Weight (pcf) is noted in italics above moist (%)
NR-No Recovery

Geo Services, Inc.
Geotechnical, Environmental and Civil Engineering
805 Jefferson Street, Suite 204
Naperville, Illinois 60540
(630) 305-3838

SOIL BORING LOG

PAGE 1 of 2
DATE 5/3/2011
LOGGED BY MD
GSI JOB No. 10181-B

ROUTE F.A. 122 (IL 394) DESCRIPTION Wing Wall Repair – Illinois 394 South Of Barnes Road
SECTION 2010-67-T LOCATION SEC. 27, T34 N., R 14 E., CRETE TOWNSHIP, 3rd P.M.
COUNTY Will DRILLING METHOD 2.25" Hollow Stem Auger HAMMER TYPE CME Automatic

STRUCT. NO. 099-0517
Station ---
BORING NO. **SB-13**
Station 200+83
Offset 97.7' Right
Ground Surface Elev. 646.2

Surface Water Elev. n/a
Stream Bed Elev. n/a
Groundwater Elevation:
First Encounter 611.2
Upon Completion Cave In
After ___ Hrs.

Description	Elev.	DEPTH (ft)	BLOWS (/6")	UCS Qu (tsf)	MOIST (%)
TOPSOIL-black			AS –		33
			1		
			2		
			3	1.2SP	29
	643.2				
CLAY TO CLAY LOAM-brown & gray-stiff to very stiff (A-6) Fill			2		99
			2		
		–5	4	1.3SP	
			2	12.7%	24
			1		109
			2		
			2	1.0B	21
			2		105
			2		
		–10	4	1.9B	20
			2		111
			3		
			8	3.6B	18
			3		106
			3		
		–15	4	1.1B	21
	630.7				
SILTY CLAY-brown & gray-stiff to very stiff (A-6)			3		102
			3		
			6	2.6B	22
			2		97
			3		
		–20	8	1.5B	24
SILTY CLAY-stiff to very stiff (A-6)	625.7				
CLAY LOAM-brown & gray-very stiff to hard (A-6)			6		109
			10		
			15	8.4B	19
			5		122
			13	3.8SB	
		–25	16	14.1%	10
	620.7				
SILTY CLAY-gray-stiff to very stiff (A-6)			4		124
			6		
			8	2.3B	11
			5		
		–30	6	1.0P	12
			3		121
			5		
			7	2.1B	12
	613.2				
CLAY LOAM-gray-very stiff (A-6)			3		114
			6		
		–35	6	2.6B	18
	608.2				
SILTY CLAY LOAM-gray-medium dense to very dense (A-4)			11		116
			16	5.4SB	
		–40	22	9.9%	15

The Unconfined Compressive Strength (UCS) Failure Mode is indicated by (B-Bulge, S-Shear, P-Penetrometer) ST-Shelby Tube Sample VS-Vane Shear Test
The SPT (N value) is the sum of the last two blow values in each sampling zone (AASHTO T206) The Unit Dry Weight (pcf) is noted in italics above moist (%)
NR-No Recovery

Geo Services, Inc.
Geotechnical, Environmental and Civil Engineering
805 Jefferson Street, Suite 204
Naperville, Illinois 60540
(630) 305-3838

SOIL BORING LOG

PAGE 2 of 2
DATE 5/3/2011
LOGGED BY MD
GSI JOB No. 10181-B

ROUTE F.A. 122 (IL 394) DESCRIPTION Wing Wall Repair – Illinois 394 South Of Barnes Road
SECTION 2010-67-T LOCATION SEC. 27, T34 N., R 14 E., CRETE TOWNSHIP, 3rd P.M.
COUNTY Will DRILLING METHOD 2.25" Hollow Stem Auger HAMMER TYPE CME Automatic

STRUCT. NO. 099-0517
Station ---
BORING NO. **SB-13**
Station 200+83
Offset 97.7' Right
Ground Surface Elev. 646.2

Surface Water Elev. n/a
Stream Bed Elev. n/a
Groundwater Elevation:
First Encounter 611.2
Upon Completion Cave In
After ___ Hrs.

Description	Elev.	DEPTH (ft)	BLOWS (/6")	UCS Qu (tsf)	MOIST (%)
SILTY CLAY LOAM-gray-medium dense to very dense (A-4)			8		112
			10	4.0SB	
			17	14.1%	18
			15		
			50/6"		
				4.5+P	16
	601.2	–45			
End Of Boring @ –40.0' Hollow Stem Augers CME Automatic Hammer					

Description	Elev.	DEPTH (ft)	BLOWS (/6")	UCS Qu (tsf)	MOIST (%)
		–50			–65
		–55			–75
		–60			–80

The Unconfined Compressive Strength (UCS) Failure Mode is indicated by (B-Bulge, S-Shear, P-Penetrometer) ST-Shelby Tube Sample VS-Vane Shear Test
The SPT (N value) is the sum of the last two blow values in each sampling zone (AASHTO T206) The Unit Dry Weight (pcf) is noted in italics above moist (%)
NR-No Recovery

Geo Services, Inc.
Geotechnical, Environmental and Civil Engineering
805 Jefferson Street, Suite 204
Naperville, Illinois 60540
(630) 305-3838

SOIL BORING LOG

PAGE 1 of 1
DATE 5/4/2011
LOGGED BY RJ
GSI JOB No. 10181-B

ROUTE F.A. 122 (IL 394) DESCRIPTION Wing Wall Repair – Illinois 394 South Of Barnes Road
SECTION 2010-67-T LOCATION SEC. 27, T34 N., R 14 E., CRETE TOWNSHIP, 3rd P.M.
COUNTY Will DRILLING METHOD 2.25" Hollow Stem Auger HAMMER TYPE CME Automatic

STRUCT. NO. 099-0517
Station ---
BORING NO. **SB-14**
Station 204+70
Offset 96.5' Right
Ground Surface Elev. 639.9

Surface Water Elev. n/a
Stream Bed Elev. n/a
Groundwater Elevation:
First Encounter 622.4
Upon Completion 622.4
After ___ Hrs.

Description	Elev.	DEPTH (ft)	BLOWS (/6")	UCS Qu (tsf)	MOIST (%)
8.0" TOPSOIL-black	639.1				
CLAY-brown & gray-very stiff to hard (A-6)			AS –		15
			2		107
			4		
			7	4.9B	18
			2		106
			5		
		–5	5	2.9B	19
			1		101
			2		
			4	2.0B	20
			2		101
			3		
		–10	4	3.2B	21
			3		97
			53		
			7	2.5B	22
	626.9				
SANDY LOAM-brown & gray-medium dense (A-2)			2		
			4		
		–15	6	NP	26
	624.4				
SAND with GRAVEL-brown-medium dense (A-1-b)			7		
			11		
	622.4		14	NP	16
CLAY LOAM-gray-stiff to hard (A-6)			12		114
			8		
		–20	13	6.8B	18
CLAY LOAM-gray-stiff to hard (A-6)			5		116
			11		
			14	4.4B	19
			7		115
			11		
		–25	15	6.7B	16
			4		118
			4		
			8	1.1B	15
			5		115
			9		
		–30	13	4.3B	13
			4		112
			7		
			11	4.6B	15
	606.9				
SILTY CLAY LOAM-gray-very dense (A-4)			13		
			19		
		–35	50/1"	4.5P	14
	604.4				
SILT-gray-very dense (A-4)			34		
			38		
			50/5"	NP	7
End Of Boring @ –40.0' Hollow Stem Augers CME Automatic Hammer	599.9	–40	50/1"	NP	13

The Unconfined Compressive Strength (UCS) Failure Mode is indicated by (B-Bulge, S-Shear, P-Penetrometer) ST-Shelby Tube Sample VS-Vane Shear Test
The SPT (N value) is the sum of the last two blow values in each sampling zone (AASHTO T206) The Unit Dry Weight (pcf) is noted in italics above moist (%)
NR-No Recovery

Geo Services, Inc.
Geotechnical, Environmental and Civil Engineering
805 Jefferson Street, Suite 204
Naperville, Illinois 60540
(630) 305-3838

SOIL BORING LOG

PAGE 1 of 1
DATE 5/4/2011
LOGGED BY RJ
GSI JOB No. 10181-B

ROUTE F.A. 122 (IL 394) DESCRIPTION Wing Wall Repair – Illinois 394 South Of Barnes Road
SECTION 2010-67-T LOCATION SEC. 27, T34 N., R 14 E., CRETE TOWNSHIP, 3rd P.M.
COUNTY Will DRILLING METHOD 2.25" Hollow Stem Auger HAMMER TYPE CME Automatic

STRUCT. NO. 099-0517
Station ---
BORING NO. **SB-15**
Station 207+17
Offset 93.9' Right
Ground Surface Elev. 635.0

Surface Water Elev. n/a
Stream Bed Elev. n/a
Groundwater Elevation:
First Encounter 615.0
Upon Completion Cave In
After ___ Hrs.

Description	Elev.	DEPTH (ft)	BLOWS (/6")	UCS Qu (tsf)	MOIST (%)
12.0" TOPSOIL-black	634.0				
CLAY LOAM-brown & gray-stiff to hard (A-6)			AS –		23
			3		99
			5		
			4	4.1B	22
			3		108
			6		
		–5	8	5.2B	18
			2		
			2		
			6	1.75P	18
	627.0				
SAND with GRAVEL-brown-loose (A-1-b)			2		
			3		
		–10	6	NP	13
	624.5				
CLAY LOAM-gray-very stiff to hard (A-6)			5		113
			6		
			9	5.0B	17
			5		112
			5		
		–15	6	5.7B	16
			5		118
			6		
			8	6.6B	16
			4		112
			4		
		–20	12	3.2B	18
CLAY LOAM-gray-very stiff to hard (A-6)			3		112
			6		
			9	4.9B	15
			3		117
		–25	8	3.2B	16
			7		114
			10		
			15	3.7B	15
	607.0				
SILTY CLAY LOAM TO SILT-gray-dense to very dense (A-4)			12		
			15		
		–30	19	NP	14
			10		
			13		
			17	NP	17
			13		
			24		
		–35	26	NP	17
			18		
			32		
			34	NP	16
			12		108
			15		
End Of Boring @ –40.0' Hollow Stem Augers CME Automatic Hammer	595.0	–40	20	4.5P	21

The Unconfined Compressive Strength (UCS) Failure Mode is indicated by (B-Bulge, S-Shear, P-Penetrometer) ST-Shelby Tube Sample VS-Vane Shear Test
The SPT (N value) is the sum of the last two blow values in each sampling zone (AASHTO T206) The Unit Dry Weight (pcf) is noted in italics above moist (%)
NR-No Recovery

Geo Services, Inc.
Geotechnical, Environmental and Civil Engineering
805 Jefferson Street, Suite 204
Naperville, Illinois 60540
(630) 305-3838

SOIL BORING LOG

PAGE 1 of 1
DATE 5/4/2011
LOGGED BY RJ
GSI JOB No. 10181-B

ROUTE FAI 190 DESCRIPTION Pump Station 24 – Discharge Sewer Pipe, Work Order No. 2
SECTION 0102.5-T LOCATION SEC. 3 & 4, T 40 N., R 12 E., LEYDEN TOWNSHIP, 3rd P.M.
COUNTY Cook DRILLING METHOD 2.25" Hollow Stem Auger HAMMER TYPE CME Automatic

STRUCT. NO. ---
Station ---
BORING NO. **SB-16**
Station 209+13
Offset 92.0' Right
Ground Surface Elev. 630.0

Surface Water Elev. n/a
Stream Bed Elev. n/a
Groundwater Elevation:
First Encounter Dry
Upon Completion Dry
After ___ Hrs.

Description	Elev.	DEPTH (ft)	BLOWS (/6")	UCS Qu (tsf)	MOIST (%)
6.0" TOPSOIL-black	629.5		AS –		24
CLAY-brown & gray-hard (A-6)			4		
			6		
			8	4.0P	19
			2		
			6		
		–5	8	4.5P	18
			4		108
			6		
			6	6.8B	19
			3		113
			6		
		–10	6	7.0B	17
	619.5				
CLAY-gray-hard (A-6)			5		108
			9		
			12	5.4B	19
	617.0				
SILTY CLAY LOAM-gray-medium dense to dense (A-4)			2		107
			4		
		–15	6	4.9B	20
			3		113
			5		
			7	5.6B	15
			2		114
			8		
		–20	13	8.9B	14
SILTY CLAY LOAM-gray (A-4)	609.5				
SILTY LOAM-gray-dense (A-4)			6		
			13		
			16	NP	13
	607.0				
SILTY CLAY-gray-hard (A-6)			8		116
			16		
		–25	20	9.7B	15
			10		116
			14		
			16	7.2B	16
	602.0				
SILTY LOAM-gray-very dense (A-4)			24		
			28		
		–30	32	NP	14
			30		
			50/1"		
				NP	14
	597.0				
CLAY LOAM-gray-hard (A-6)			13		124
			19		
		–35	24	10.2B	10
			13		121
			16		
			20	9.7SB	11
			14		120
End Of Boring @ –40.0' Hollow Stem Augers CME Automatic Hammer	590.0	–40	16	10.6B	11

The Unconfined Compressive Strength (UCS) Failure Mode is indicated by (B-Bulge, S-Shear, P-Penetrometer) ST-Shelby Tube Sample VS-Vane Shear Test
The SPT (N value) is the sum of the last two blow values in each sampling zone (AASHTO T206) The Unit Dry Weight (pcf) is noted in italics above moist (%)
NR-No Recovery

FILE NAME = g:\projects\2102155.81\cadd\civil\dgn\D160F90-32dn-sbloqs02.dgn

ENTRAN

USER NAME = 2bookd	DESIGNED - DJB	REVISED -	
	DRAWN - ENTRAN	REVISED -	
PLOT SCALE = 20.00 ' / IN.	CHECKED - DAK	REVISED -	
PLOT DATE = 9/7/2011	DATE - 09/07/11	REVISED -	

STATE OF ILLINOIS
DEPARTMENT OF TRANSPORTATION

PUMP STATION 24 STORM SEWER IMPROVEMENTS
SOIL BORING LOGS

SCALE: 20.00 ' / IN. | SHEET NO. OF SHEETS | STA. TO STA.

F.A.I. RTE.	SECTION	COUNTY	TOTAL SHEETS	SHEET NO.
190	0102.5-T	COOK	41	36

CONTRACT NO. 60F90
FED. ROAD DIST. NO. 1 | ILLINOIS | FED. AID PROJECT

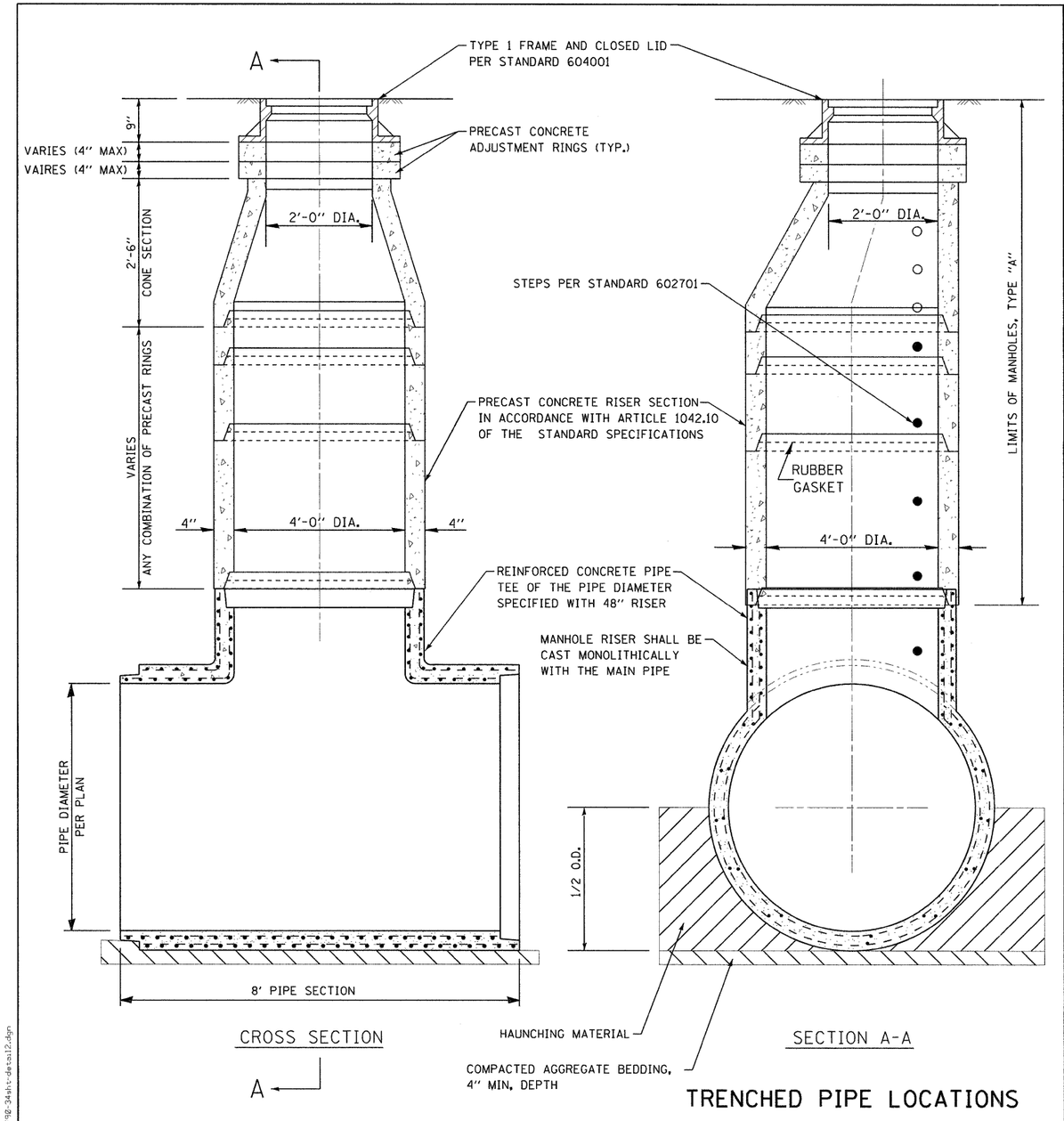

TRENCHED PIPE LOCATIONS

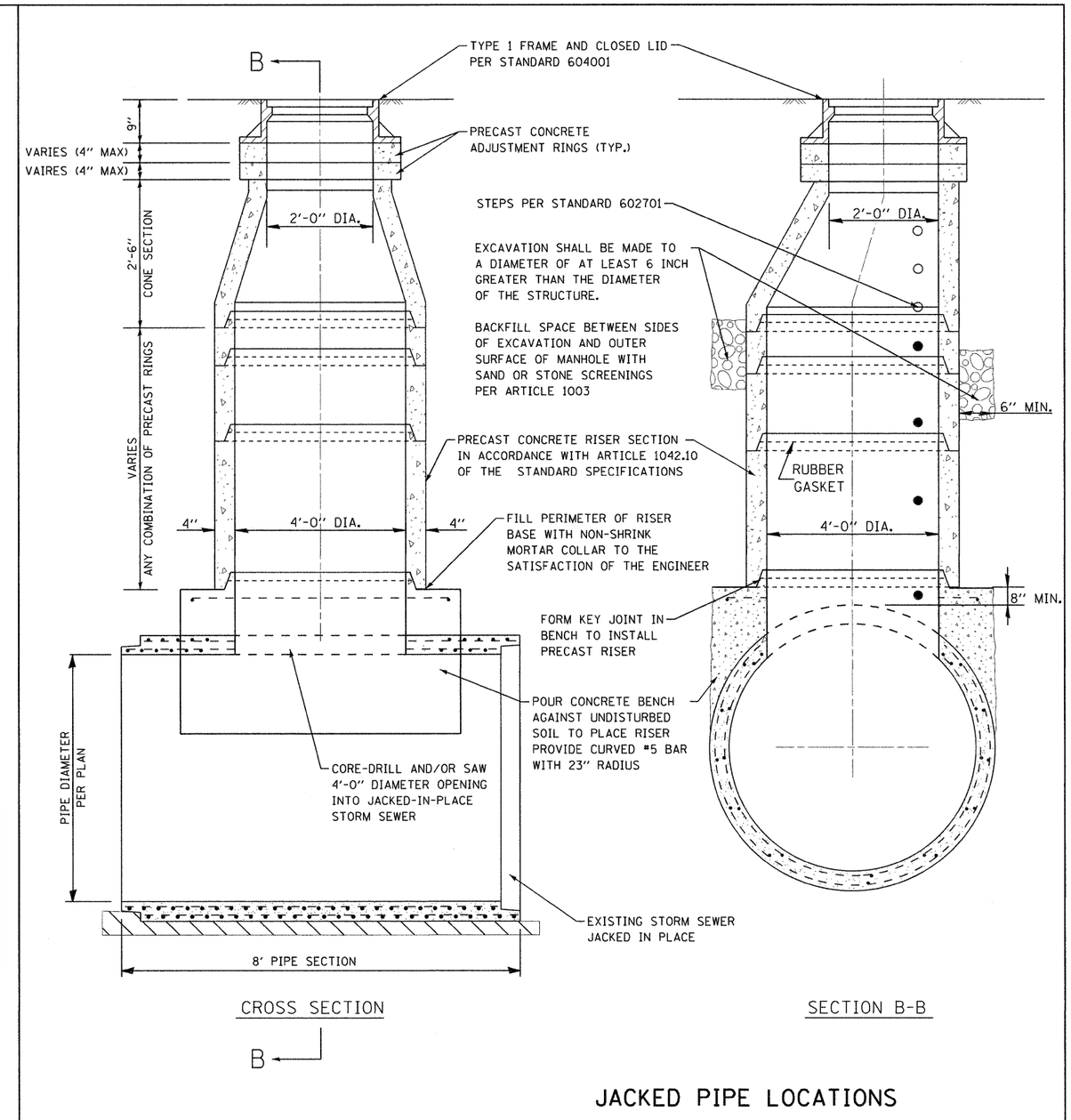

JACKED PIPE LOCATIONS

GENERAL NOTES:

1. INSTALLATION SHALL CONFORM WITH THE APPLICABLE SECTION OF ARTICLES 550 AND 602 OF THE STANDARD SPECIFICATIONS.
2. IF THE EXISTING SEWER PIPE IS CRACKED, BROKEN, OR OTHERWISE DAMAGED DURING THE REMOVAL, THE CONTRACTOR SHALL REPLACE THE DAMAGED SECTION OF PIPE WITH PIPE EQUAL AND SIMILAR IN ALL RESPECTS TO THE PIPE IN THE EXISTING SEWER, IN A CAREFUL WORKMANLIKE MANNER WITHOUT ADDITIONAL COMPENSATION.
3. TRENCH BACKFILL AND REPLACEMENT OF UNSUITABLE MATERIAL BELOW PLAN BEDDING GRADE WILL BE PAID FOR SEPERATELY.
4. ANY MATERIAL OR DEBRIS DEPOSITED IN THE FLOW LINE OF THE STORM SEWER DUE TO THE CONSTRUCTION OPERATIONS SHALL BE REMOVED UPON COMPLETION OF THE WORK.

MANHOLES, TYPE A, 4'-DIAMETER, TYPE 1 FRAME, CLOSED LID, SPECIAL DETAIL

FILE NAME = g:\project\2102155_01\cadd\civil\sht\D1G0F90-34sht-detail2.dgn

ENTRAN	USER NAME = 2bookd	DESIGNED - DJB	REVISED -
		DRAWN - ENTRAN	REVISED -
	PLOT SCALE = 1.00 ' / IN.	CHECKED - DAK	REVISED -
	PLOT DATE = 10/11/2011	DATE - 09/07/11	REVISED -

STATE OF ILLINOIS
DEPARTMENT OF TRANSPORTATION

PUMP STATION 24 STORM SEWER IMPROVEMENTS
DRAINAGE DETAILS

SCALE: 1.00 ' / IN. | SHEET NO. OF SHEETS | STA. TO STA.

F.A.I. RTE.	SECTION	COUNTY	TOTAL SHEETS	SHEET NO.
190	0102.5-T	COOK	41	37
		CONTRACT NO. 60F90		

FED. ROAD DIST. NO. 1 | ILLINOIS | FED. AID PROJECT

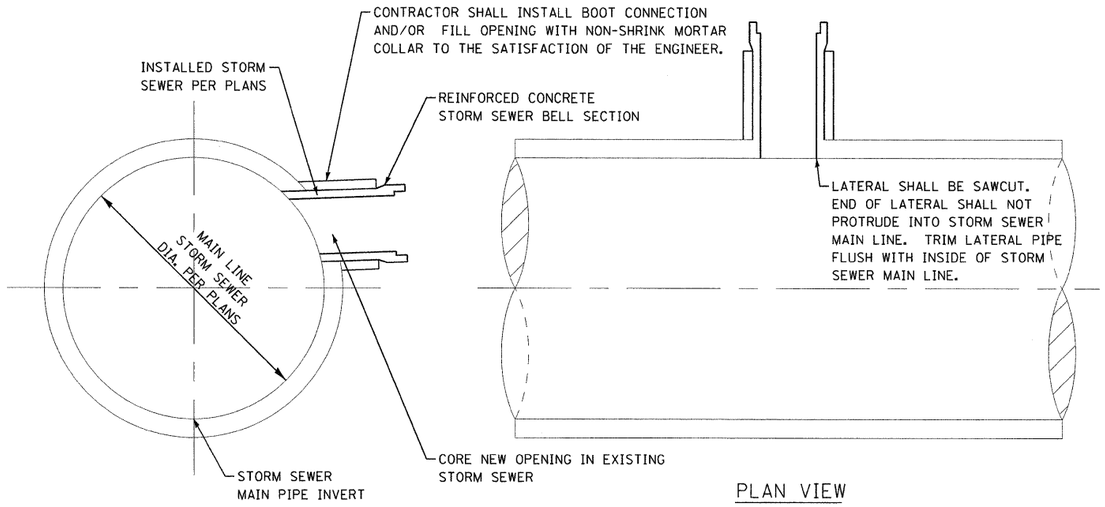

GENERAL NOTES

1. THE WORK SHALL BE CONSTRUCTED IN CONFORMANCE WITH THE APPLICABLE PORTIONS OF SECTION 550 OF THE STANDARD SPECIFICATIONS

STORM SEWER CONNECTION DETAIL

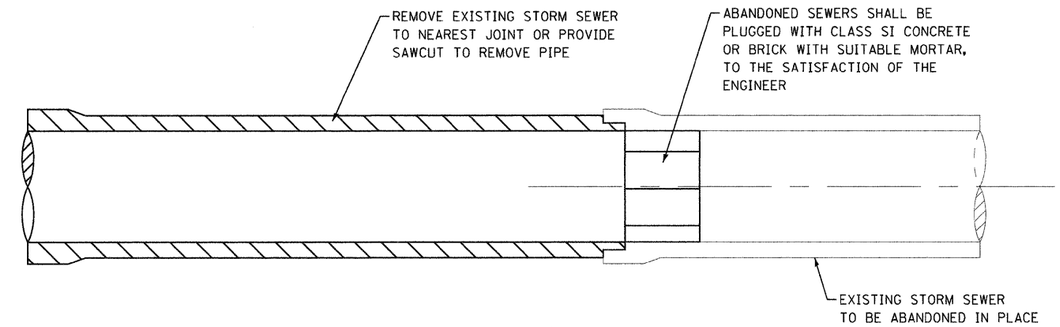

GENERAL NOTES

1. THE WORK SHALL BE CONSTRUCTED IN CONFORMANCE WITH THE APPLICABLE PORTIONS OF SECTION 550 OF THE STANDARD SPECIFICATIONS
2. IF THE EXISTING SEWER PIPE TO REMAIN IS CRACKED, BROKEN, OR OTHERWISE DAMAGED DURING THE REMOVAL, THE CONTRACTOR SHALL REPLACE THE DAMAGED SECTION OF PIPE WITH PIPE EQUAL AND SIMILAR IN ALL RESPECTS TO THE PIPE IN THE EXISTING SEWER, IN A CAREFUL WORKMANLIKE MANNER WITHOUT ADDITIONAL COMPENSATION.

PIPE REMOVAL AND PLUG DETAIL

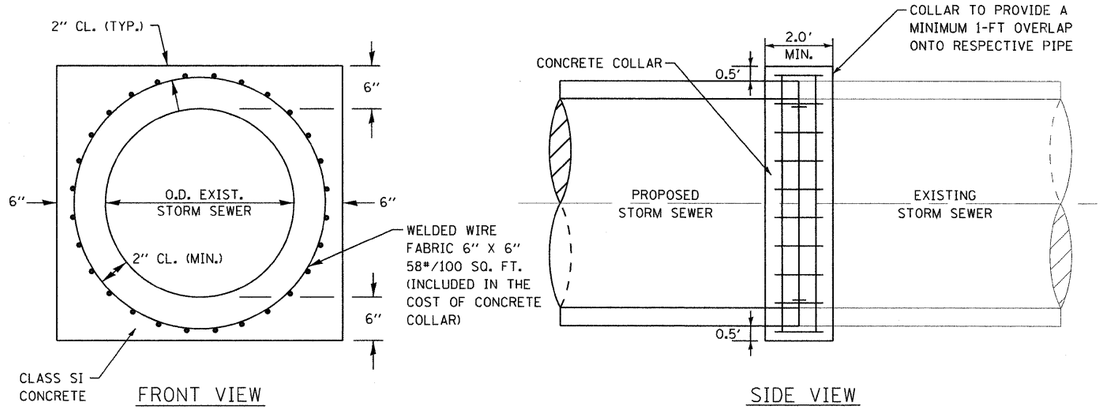

GENERAL NOTES

1. IF THE EXISTING SEWER PIPE IS CRACKED, BROKEN, OR OTHERWISE DAMAGED DURING THE REMOVAL, THE CONTRACTOR SHALL REPLACE THE DAMAGED SECTION OF PIPE WITH PIPE EQUAL AND SIMILAR IN ALL RESPECTS TO THE PIPE IN THE EXISTING SEWER, IN A CAREFUL WORKMANLIKE MANNER WITHOUT ADDITIONAL COMPENSATION.
2. TRENCH BACKFILL AND REMOVAL AND REPLACEMENT OF UNSUITABLE MATERIAL BELOW PLAN BEDDING GRADE WILL BE PAID FOR SEPERATELY.
3. CONCRETE COLLAR SHALL BE FORMED TO PROVIDE A SMOOTH PIPE INTERIOR

INSIDE DIAMETER OF PIPE	ESTIMATED CLASS SI CONCRETE REQUIRED / EACH
INCH	CU YD
72	2.10
84	2.50
96	3.00

CONCRETE COLLAR DETAIL

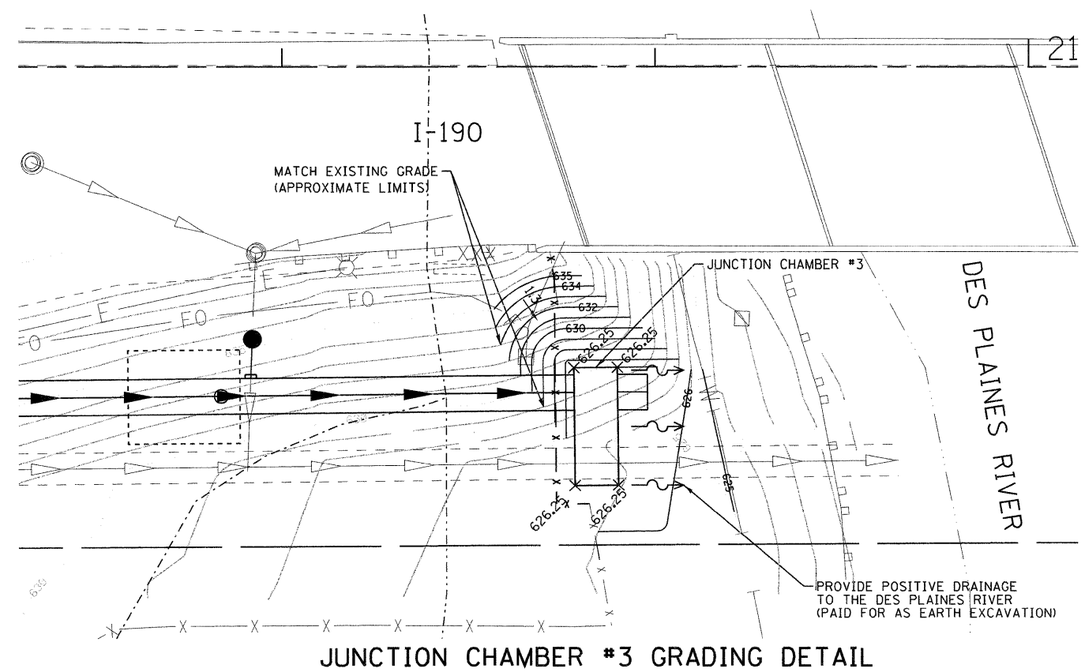

JUNCTION CHAMBER #3 GRADING DETAIL

(NOT TO SCALE)

FILE NAME = g:\projects\2102155.011\cadd\civil\sht\D\060F90-25sht-detail3.dgn

ENTRAN	USER NAME = 2bookd	DESIGNED - DJB	REVISED -
		DRAWN - ENTRAN	REVISED -
	PLOT SCALE = 1.00 ' / IN.	CHECKED - DAK	REVISED -
	PLOT DATE = 10/11/2011	DATE - 09/07/11	REVISED -

STATE OF ILLINOIS
DEPARTMENT OF TRANSPORTATION

PUMP STATION 24 STORM SEWER IMPROVEMENTS
DRAINAGE DETAILS

SCALE: 1.00 ' / IN. | SHEET NO. OF SHEETS | STA. TO STA.

F.A.I. RTE.	SECTION	COUNTY	TOTAL SHEETS	SHEET NO.
190	0102.5-T	COOK	41	38
		CONTRACT NO. 60F90		

FED. ROAD DIST. NO. 1 | ILLINOIS | FED. AID PROJECT

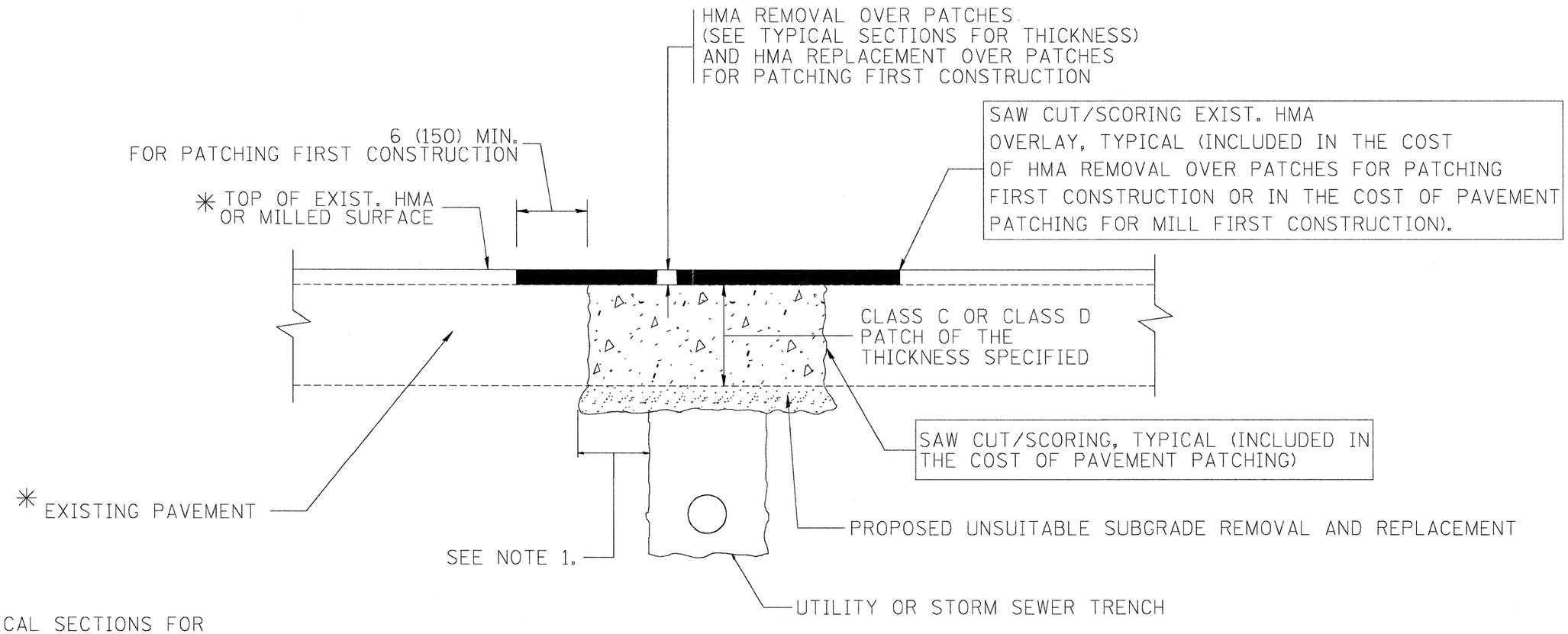

✳ SEE TYPICAL SECTIONS FOR THICKNESS AND MATERIALS

NOTES:

1. THE WIDTH OF THE FULL DEPTH PATCH OVER A TRENCH SHALL BE 12 (300) WIDER ON EACH SIDE OF THE TRENCH.
2. FOR METHOD OF MEASUREMENT AND BASIS OF PAYMENT, SEE RECURRING SPECIAL PROVISION "PATCHING WITH HOT-MIX ASPHALT OVERLAY REMOVAL".

SEQUENCE OF CONSTRUCTION (PATCHING FIRST)

1. REMOVE THE EXISTING HMA MATERIAL OVER THE AREA TO BE PATCHED.
2. REMOVE AND REPLACE WITH CLASS C OR D PATCH.
3. REPLACE HMA MATERIAL OVER THE AREA TO BE PATCHED.

SEQUENCE OF CONSTRUCTION (MILLING FIRST)

1. MILL HMA FIRST IF THERE IS AT LEAST 4½ INCHES OR MORE OF HMA MATERIAL ON TOP OF THE EXISTING PAVEMENT OR IF THE PAVEMENT IS FULL DEPTH HMA. A MINIMUM OF 2 INCHES OF HMA MATERIAL SHALL BE IN PLACE AFTER MILLING.
2. REMOVE AND REPLACE WITH FULL DEPTH CLASS D PATCHES TO TOP OF MILLED SURFACE.

ALL DIMENSIONS ARE IN INCHES (MILLIMETERS) UNLESS OTHERWISE SHOWN.

FILE NAME = c:\projects\diststd22x34\bd22.dgn	USER NAME = bauerdl	DESIGNED - R. SHAH	REVISED - A. ABBAS 04-27-98	STATE OF ILLINOIS DEPARTMENT OF TRANSPORTATION	PAVEMENT PATCHING FOR HMA SURFACED PAVEMENT	F.A.I. RTE.	SECTION	COUNTY	TOTAL SHEETS	SHEET NO.
		DRAWN -	REVISED - R. BORO 01-01-07			190	0102.5-T	COOK	41	39
	PLOT SCALE = 50.000 ' / IN.	CHECKED -	REVISED - R. BORO 09-04-07			BD400-04 (BD-22)		CONTRACT NO. 60F90		
	PLOT DATE = 10/27/2008	DATE - 10-25-94	REVISED - K. ENG 10-27-08		SCALE: NONE / SHEET NO. 1 OF 1 SHEETS / STA. / TO STA.	FED. ROAD DIST. NO. 1	ILLINOIS	FED. AID PROJECT		

FILE NAME = g:\project\2102155.01\cadd\civil\sht\01B0F90-26sht-details14.dgn

PARTIAL RAMP CLOSURE DETAILS

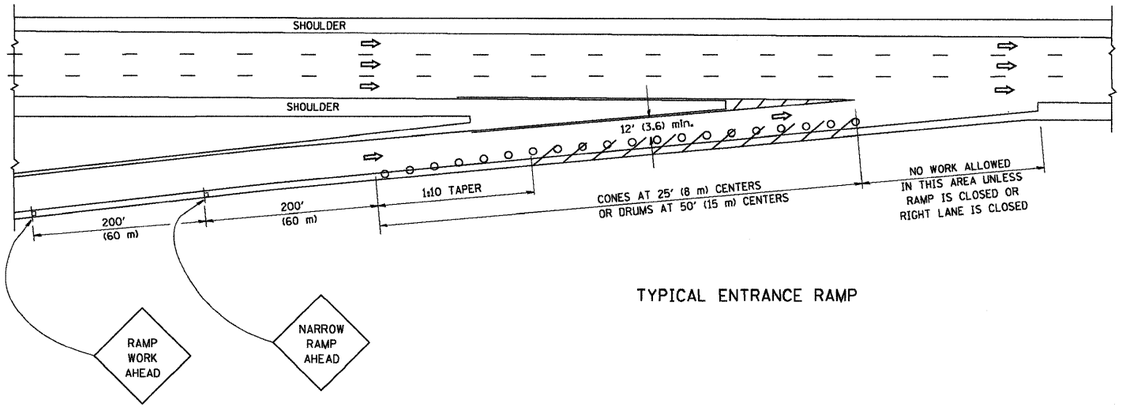

TYPICAL ENTRANCE RAMP

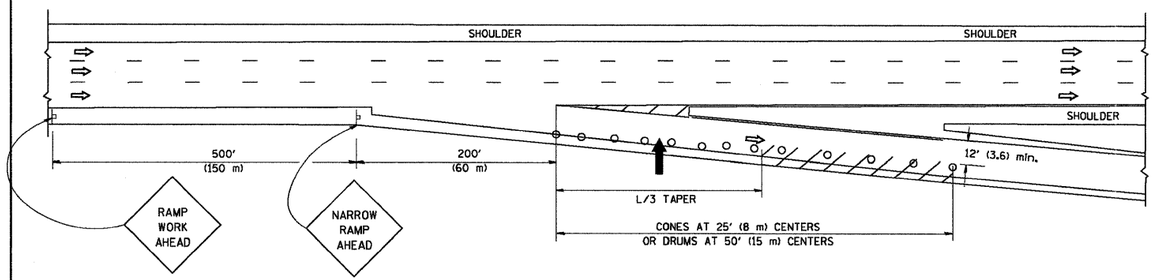

TYPICAL EXIT RAMP

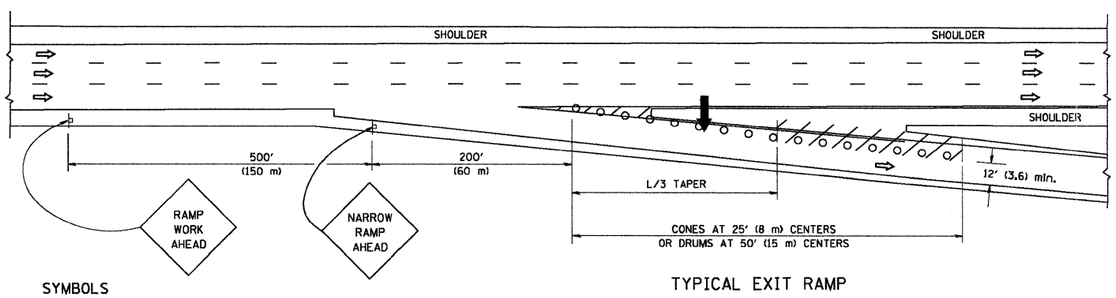

TYPICAL EXIT RAMP

SHOULDER CLOSURE DETAILS

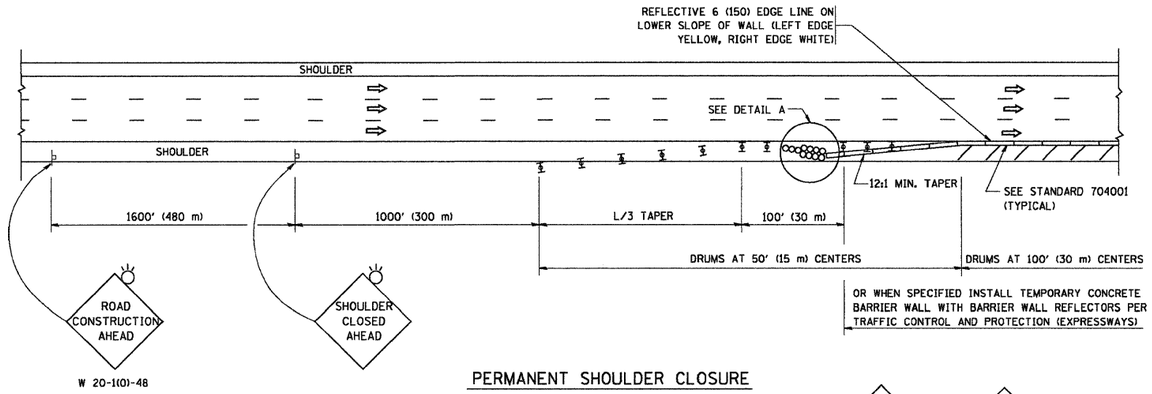

W 20-1(0)-48

PERMANENT SHOULDER CLOSURE

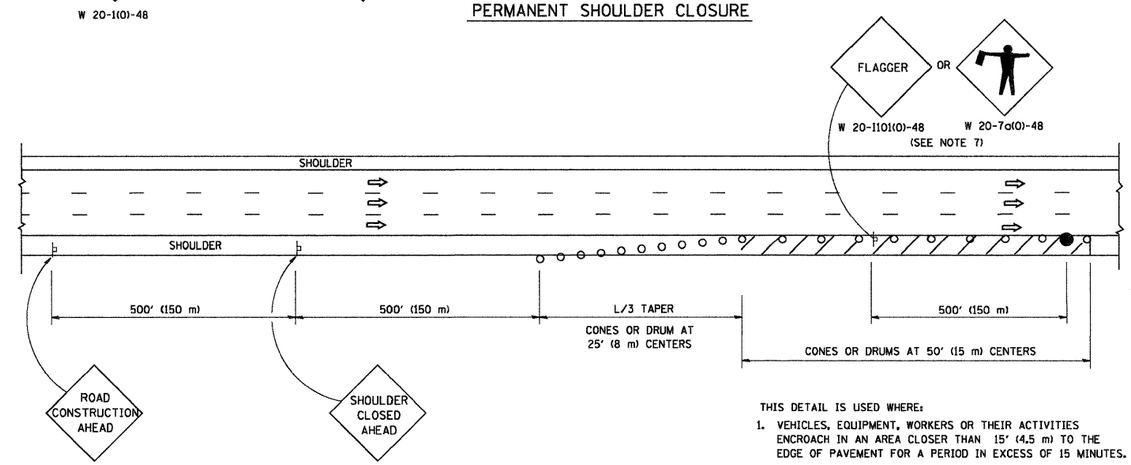

W 20-1(0)-48

DAYTIME SHOULDER CLOSURE

THIS DETAIL IS USED WHERE:

1. VEHICLES, EQUIPMENT, WORKERS OR THEIR ACTIVITIES ENCROACH IN AN AREA CLOSER THAN 15' (4.5 m) TO THE EDGE OF PAVEMENT FOR A PERIOD IN EXCESS OF 15 MINUTES.

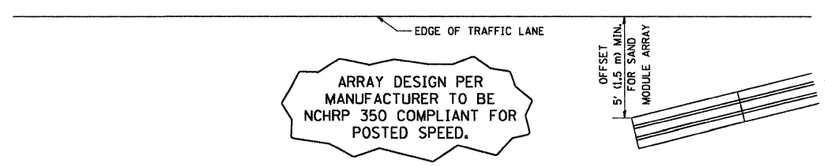

DETAIL "A"
IMPACT ATTENTUATOR, TEMPORARY
(SEE NOTE 5)

ALL DIMENSIONS ARE IN INCHES (MILLIMETERS)
UNLESS OTHERWISE SHOWN.

SYMBOLS

- ARROWBOARD
- WORK AREA
- SIGN ON PORTABLE OR PERMANENT SUPPORT
- FLAGGER WITH CONTROL SIGN
- TYPE II BARRICADE, DRUM OR VERTICAL BARRICADE WITH STEADY BURN MONO-DIRECTIONAL LIGHT
- CONE, DRUM OR BARRICADE

GENERAL NOTES

1. THE "L" DISTANCE EQUALS:

SPEED LIMIT	FORMULAS	
45 mph (80 km/h) OR GREATER:	METRIC	ENGLISH
	L=0.65(W)(S)	L=(W)(S)

W = WIDTH OF OFFSET IN FEET (METERS)
S = NORMAL POSTED SPEED MPH (KM/H)

2. PLASTIC DRUMS WITH HIGH PERFORMANCE REFLECTIVE SHEETING AND STEADY BURNING LIGHTS ARE REQUIRED FOR ALL NIGHTTIME CLOSURES.
3. ALL SIGNS SHALL BE POST MOUNTED IF THE CLOSURE TIME EXCEEDS FOUR DAYS.
4. FLASHING LIGHTS SHALL BE USED DURING THE HOURS OF DARKNESS AND SHALL BE INSTALLED ABOVE THE FIRST TWO SETS OF SIGNS.
5. THE IMPACT ATTENTUATOR, TEMPORARY IS NOT REQUIRED WHEN THE TEMPORARY CONCRETE BARRIER WALL IS PROTECTED BY OR IS TIED INTO THE EXISTING GUARDRAIL. IF OFFSET IS LESS THAN 5 FEET USE "TRAFFIC BARRIER TERMINAL, TYPE III, TEMPORARY" DEVICE TO MEET NCHRP350 FOR POSTED SPEED.
6. AUTHORIZATION FROM THE DISTRICT'S BUREAU OF TRAFFIC IS REQUIRED FOR ALL FREEWAY CLOSURES.
7. THE FLAGGER AND FLAGGER SIGN ARE REQUIRED AT THE ABOVE WORK SITES WHEN:
   a. FOUR OR MORE WORK VEHICLES ENTER THE TRAFFIC LANES IN A ONE HOUR PERIOD.
   b. THE WORK AVTIVITY REQUIRES FREQUENT ENCROACHMENT INTO THE LANE OPEN TO TRAFFIC.

   THE FLAGGER SHALL BE STATIONED APPROXIMATELY 100' (30 m) TO 200' (60 m) IN ADVANCE OF THE WORKERS.

FILE NAME = g:\proj\pcl\2102155.01\cadd\civil\sht\0102P-90-37sht-detail5.dgn

FILE NAME = Wi\distatd\22x34\tc17.dgn	USER NAME = gaglianobt	DESIGNED -	REVISED - J.A.F. 12-02	STATE OF ILLINOIS DEPARTMENT OF TRANSPORTATION
		DRAWN - D.W.S.	REVISED - 04-03	
	PLOT SCALE = 50.0000 ' / IN.	CHECKED -	REVISED - J.A.F. 12-06	
	PLOT DATE = 1/4/2008	DATE - 11-96	REVISED - S.P.B. 01-07	

TRAFFIC CONTROL DETAILS FOR FREEWAY
SHOULDER CLOSURES AND PARTIAL RAMP CLOSURES

SCALE: NONE | SHEET NO. 1 OF 1 SHEETS | STA. | TO STA.

F.A.I. RTE.	SECTION	COUNTY	TOTAL SHEETS	SHEET NO.
190	0102.5-T	COOK	41	40
	TC-17	CONTRACT NO. 60F90		

FED. ROAD DIST. NO. 1 | ILLINOIS | FED. AID PROJECT

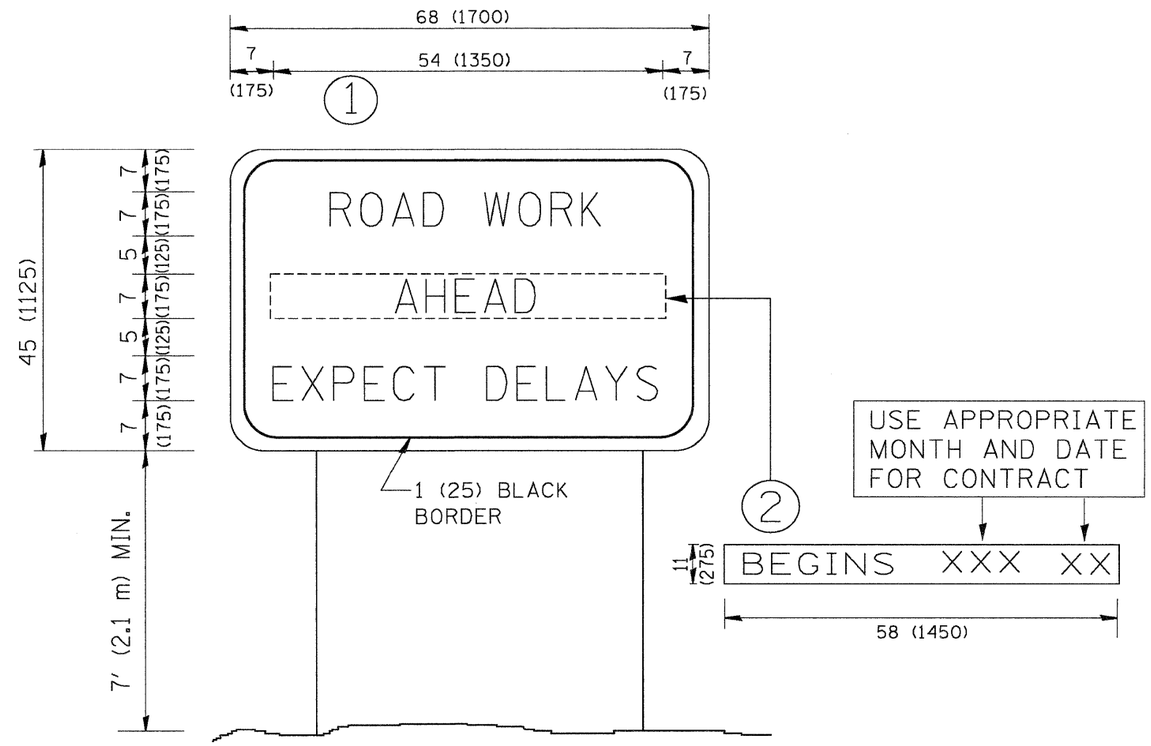

NOTES:

1. USE BLACK LETTERING ON ORANGE BACKGROUND.
2. ERECT SIGNS IN ADVANCE OF THE LOCATION FOR THE "ROAD CONSTRUCTION AHEAD" SIGN AT LOCATIONS AS DIRECTED BY THE ENGINEER.
3. ERECT SIGN 1 WITH INSTALLED PANEL 2 ONE WEEK PRIOR TO THE START OF CONSTRUCTION.
4. REMOVE PANEL 2 SOON AFTER THE START OF CONSTRUCTION.
5. SEE SPECIAL PROVISION FOR "TEMPORARY INFORMATION SIGNING" FOR ADDITIONAL INFORMATION.
6. ONE SIGN ASSEMBLY EQUALS 25.70 SQ. FT. (2.3 SQ. M.)
7. SHALL BE PAID FOR AS TEMPORARY INFORMATION SIGNING.

ALL DIMENSIONS ARE IN INCHES (MILLIMETERS) UNLESS OTHERWISE SHOWN.

FILE NAME = g:\pro_ject\2102155.B11\cadd\civil\sht\D160F790-38sht-details16.dgn

FILE NAME = W:\diststd\22x34\to22.dgn	USER NAME = gaglianobt	DESIGNED -	REVISED - R. MIRS 09-15-97	STATE OF ILLINOIS DEPARTMENT OF TRANSPORTATION	ARTERIAL ROAD INFORMATION SIGN			F.A.I. RTE.	SECTION	COUNTY	TOTAL SHEETS / SHEET NO.
		DRAWN -	REVISED - R. MIRS 12-11-97					190	0102.5-T	COOK	41 / 41
	PLOT SCALE = 50.000 ' / IN.	CHECKED -	REVISED -T. RAMMACHER 02-02-99						TC-22	CONTRACT NO. 60F90	
	PLOT DATE = 1/4/2008	DATE -	REVISED - C. JUCIUS 01-31-07		SCALE: NONE	SHEET NO. 1 OF 1 SHEETS	STA. TO STA.	FED. ROAD DIST. NO. 1	ILLINOIS	FED. AID PROJECT	