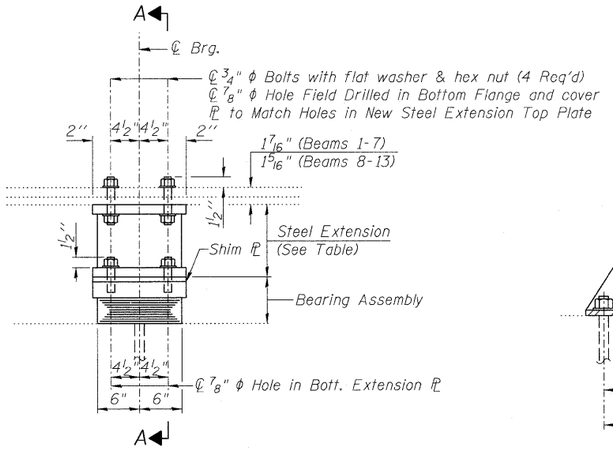

ELEVATION AT PIER 1

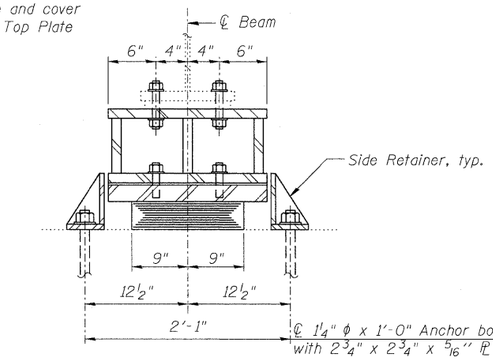

SECTION A-A

TYPE I ELASTOMERIC EXP. BRG.

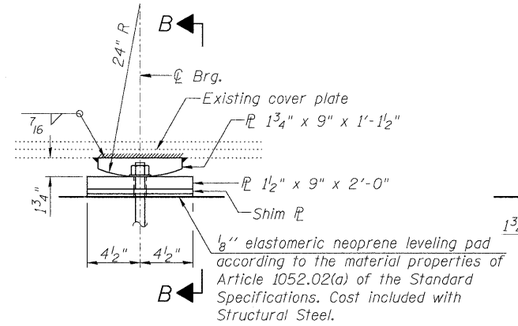

ELEVATION AT PIER 2

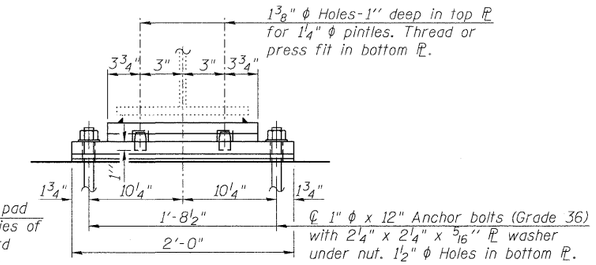

SECTION C-C

FIXED BEARING

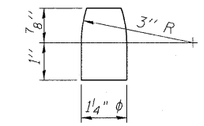

PINTLE

Notes:

Anchor bolts shall be ASTM F1554 all-thread (or an Engineer-approved alternate material) of the grade(s) and diameter(s) specified. ASTM A307 Grade C anchor bolts may be used in lieu of ASTM F1554 Grade 36 (Fy=36ksi). The corresponding specified grade of AASHTO M314 anchor bolts may be used in lieu of ASTM F1554.

Drilled and set anchor bolts shall be installed according to Article 521.06 of the Standard Specifications.

Side retainers and other steel members required for the elastomeric bearing assembly shall be included in the cost of Elastomeric Bearing Assembly, Type I.

Two 1/8 in. adjusting shims shall be provided for each bearing in addition to all other plates or shims and placed as shown on bearing details.

Steel Extensions and fasteners shall be included in the cost of Furnishing and Erecting Structural Steel.

The Contractor is to verify the existing dimensions prior to fabricating the steel extensions.

Anchor bolts at fixed bearings may be either cast in place or installed in holes drilled after the supported member is in place.

Fasteners shall be AASHTO M164 Type 1, mechanically galvanized bolts.

The bearings shall be in place and the jacks lowered before the new concrete deck is poured.

Hardwood timbers shall be installed tightly between top and bottom flanges directly over the jack location to prevent rotation.

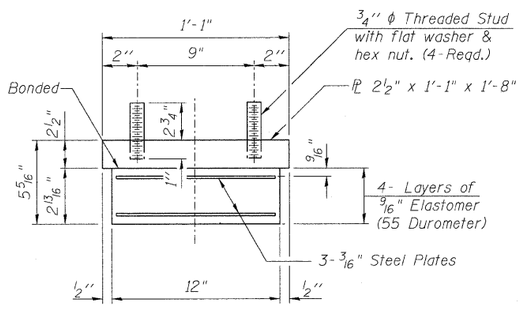

BEARING ASSEMBLY - PIER 1

Note:
Shim plates shall not be placed under Bearing Assembly.

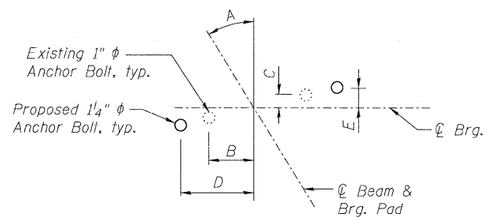

ANCHOR BOLT LOCATION

(Pier 1)

Beams	1 thru 11	12	13
A	31°-30'-10"	30°-47'-29"	30°-04'-09"
B	6 7/8"	6 7/8"	6 7/8"
C	4 1/8"	4 1/8"	4"
D	10 5/8"	10 3/4"	10 7/8"
E	6 1/2"	6 3/8"	6 1/4"

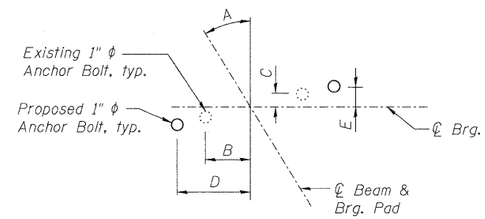

ANCHOR BOLT LOCATION

(Pier 2)

Beams	1 thru 11	12	13
A	31°-30'-10"	30°-47'-29"	30°-04'-09"
B	6 7/8"	6 7/8"	6 7/8"
C	4 1/8"	4 1/8"	4"
D	8 3/4"	8 3/4"	8 7/8"
E	5 3/8"	5 1/4"	5 1/8"

BILL OF MATERIAL

Item	Unit	Total
Elastomeric Bearing Assembly Type I	Each	13
Anchor Bolts, 1"	Each	26
Anchor Bolts, 1 1/4"	Each	26
Furnishing and Erecting Structural Steel	Pound	5830

STEEL EXTENSION DIMENSIONS

(Pier 1)

	Beam 1	Beam 2	Beam 3	Beam 4	Beam 5	Beam 6	Beam 7	Beam 8	Beam 9	Beam 10	Beam 11	Beam 12	Beam 13
A	9 3/8"	8 5/8"	9 1/8"	8 5/8"	8 3/4"	8"	5 5/8"	10"	9 1/2"	10 1/4"	10 5/8"	10 3/8"	10"
B	11 3/8"	10 5/8"	11 1/8"	10 5/8"	10 3/4"	10"	7 5/8"	12"	11 1/2"	12 1/4"	12 5/8"	12 3/8"	12"

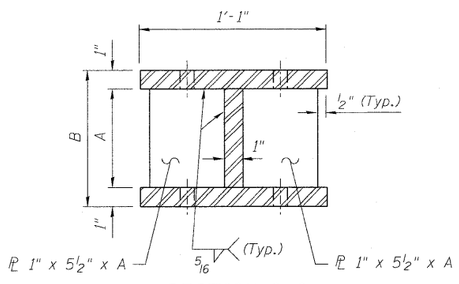

SECTION C-C

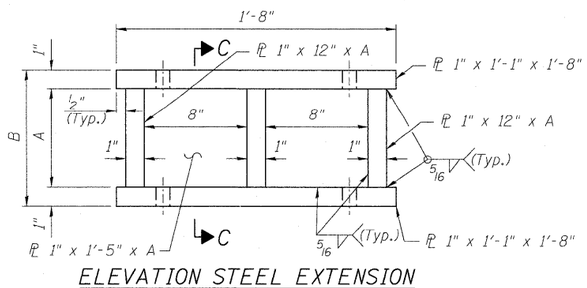

ELEVATION STEEL EXTENSION

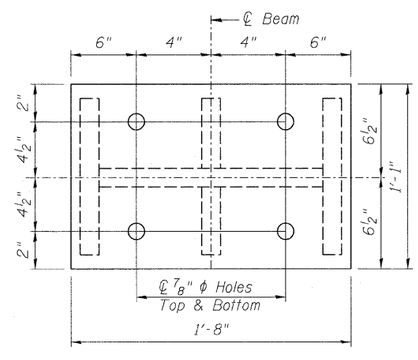

PLAN STEEL EXTENSION

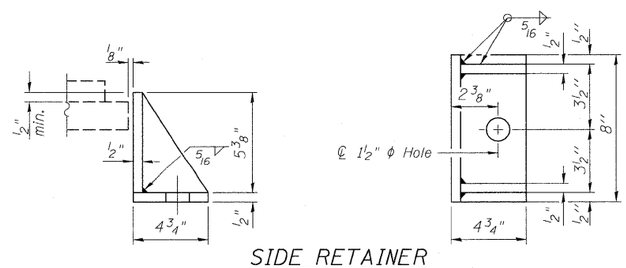

SIDE RETAINER

Equivalent rolled angle with stiffeners will be allowed in lieu of welded plates.

(Sheet 1 of 2)

LIN ENGINEERING, LTD. Consulting Engineers Chatham, Illinois	USER NAME =	DESIGNED - MTH	REVISED -
	FILE NAME =	CHECKED - ADB	REVISED -
	PLOT SCALE =	DRAWN - AJF	REVISED -
	PLOT DATE =	CHECKED - MTH	REVISED -

STATE OF ILLINOIS
DEPARTMENT OF TRANSPORTATION

PIER BEARING DETAILS
STRUCTURE NO. 045-0037

SHEET NO. 30 OF 39 SHEETS

F.A.P. RTE.	SECTION	COUNTY	TOTAL SHEETS	SHEET NO.
573	61HB-1-R	KANE	110	80

CONTRACT NO. 60K76

ILLINOIS FED. AID PROJECT